National Crane Series NBT45

Product Guide

Features

- 40,8 t (45 USt) rating
- 43,3 m (142 ft) five-section boom
- Self-lubricating Easy Glide wear pads
- 2041 kg (4500 lb) tailswing counterweight

Courtesy of Crane.Market

Features

Outriggers

Outrigger span of 7,52 m (24.7 ft) when fully extended; 5,33 m (17.5 ft) at mid-span.

Equipped with both ground level and in-cab outrigger controls, the NBT45 outriggers allow quick and easy crane set-up and can be positioned at 0%, 50% and 100%.

Five-section boom

At 43,29 m (142 ft), the NBT45 five-section boom is the longest in its size range. The long boom allows the operator to perform more lifts without the use of a jib, reducing setup time and improving efficiency. Also available are optional boom lengths of 31,39 m (103 ft) and 38,71 m (127 ft).

National Crane Series NBT45

- 40,8 t (45 USt) maximum capacity
- 45,72 m (150 ft) maximum tip height (main boom)
- 62,18 m (204 ft) maximum tip height (boom with jib)

Deluxe operator's cab

Rigid galvanized steel structure, well insulated, with tinted safety glass for operator visibility and comfort. Multi-position seat with arm rest mounted single axis controls, ventilation fans, diesel heater, dual cab mounted worklights and wipers. Optional air conditioning is available.

Overload protection

All National Crane boom trucks are equipped with overload protection. A Load Moment Indicator (LMI) is standard on all NBT45 machines. The LCD display is visible in full or low light and displays all crane load lifting values simultaneously. Includes Work Area Definition System (WADS).

Courtesy of Crane.Market

Features

National Crane is proud to introduce the Series NBT45

- The stronger standard torsion box improves rigidity, reduces truck frame flex and reduces the need for counterweight
- Easy Glide boom wear pads reduce the conditions that cause boom chatter and vibration. The net result is smoother crane operation
- Speedy-reeve boom tip and sheave blocks simplify rigging changes by decreasing the time needed to change line reeving
- Painting crane components before assembly reduces the possibility of rust, improves serviceability and enhances the appearance of the machine
- State of the art control valve provides smoother operation. The new design eliminates parts, reducing repair costs and improving the machines serviceability
- Bearings on the boom and retract cables can be greased through access holes in the boom side plates
- Boom sections are supported by one hydraulic extend cylinder, minimizing maintenance
- Two-speed grooved drum hoist with cable packer, electronic drum rotation indicator (DRI) and last layer indicator (LLI)

Courtesy of Crane.Market

Contents

Specifications	5
Mounting configurations	7
Dimensions	9
Working range - 103 ft boom	10
Load chart - 103 ft boom	11
Working range - 127 ft boom	13
Load chart - 127 ft boom	14
Working range - 142 ft boom	16
Load chart - 142 ft boom	17
Accessories	19

Courtesy of Crane.Market

Boom and jib combinations data

Available in three basic models:

NBT45 - 103: Equipped with a 9,45 m - 31,39 m (31 ft - 103 ft) four-section boom. This model can be equipped with a 9,45 m (31 ft) jib, offering a vertical reach of 43,29 m (142 ft) or a 9,45 m - 16,76 m (31 ft- 55 ft) side-stowing foldaway jib, providing a vertical reach of 50,60 m (166 ft).

9,45 m - 31,39 m (31 ft - 103 ft) four-section hydraulic boom **18FJ31OS** 9,45 m (31 ft) single-section offsettable manual jib

9,45 m - 31,39 m (31 ft - 103 ft) four-section hydraulic boom **18FJ55M** 9,45 m - 16,76 m (31 ft - 55 ft) two-section manual jib

NBT45-127: Equipped with a 9,45 m - 38,71 m (31 ft - 127 ft) five-section boom. This model can be equipped with a 9,45 m - 16,76 m (31 ft - 55 ft) fold-away jib offering a vertical reach of 57,91 m (190 ft).

9,45 m - 38,71 m (31 ft - 127 ft) five-section hydraulic boom **18FJ55M** 9,45 m - 16,76 m (31 ft - 55 ft) two-section manual jib

NBT45 - 142: Equipped with a 10,36 m - 43,29 m (34 ft - 142 ft) five-section boom. This model can be equipped with a 7,92 m (26 ft) foldaway jib, offering a vertical reach of 53,64 m (176 ft) or a 9,45 m - 16,76 m (31 ft - 55 ft) side-stowing foldaway jib, providing a vertical reach of 62,48 m (205 ft).

10,36 m - 43,29 m (34 ft - 142 ft) five-section hydraulic boom **18FJ26** 7,92 m (26 ft) single-section manual jib

10,36 m - 43,29 m (34 ft - 142 ft) five-section hydraulic boom **18FJ55M** 9,45 m - 16,76 m (31 ft - 55 ft) two-section manual jib

Note: Maximum tip is measured with outriggers/stabilizers fully extended.

Courtesy of Crane.Market

Specifications

NBT45 winch data

- All winch pulls and speeds are shown on the fourth layer.
- Winch line pulls would increase on the first, second, and third layers.
- Winch line speed would decrease on the first, second, and third layers.
- Winch line pulls may be limited by the winch capacity or the ANSI 5 to 1 cable safety factor.

			1 part line	2 part line	3 part line	4 part line	5 part line	6 part line	7 part line	8 part line
Standard planetary winch	**Cable supplied**	**Average breaking strength**	**Max. pull**	**Max. pull**	**Max. pull**	**Max. pull**	**Max. pull**	**Max. pull**	**Max. pull**	**Max. pull**
Low speed	5/8" diameter rotation resistant IWRC	25 583 kg (56,400 lb)	5103 kg (11,250 lb) 62 m/min (205 fpm)	10 206 kg (22,500 lb) 31 m/min (103 fpm)	15 309 kg (33,750 lb) 21 m/min (68 fpm)	20 412 kg (45,000 lb) 16 m/min (51 fpm)	25 515 kg (56,250 lb) 13 m/min (41 fpm)	30 618 kg (67,500 lb) 10 m/min (34 fpm)	35 721 kg (78,750 lb) 9 m/min (29 fpm)	40 824 kg (90,000 lb) 8 m/min (26 fpm)
High speed	5/8" diameter rotation resistant IWRC	25 583 kg (56,400 lb)	2268 kg (5000 lb) 125 m/min (410 fpm)	4536 kg (10,000 lb) 62 m/min (205 fpm)	6804 kg (15,000 lb) 42 m/min (137 fpm)	9072 kg (20,000 lb) 31 m/min (103 fpm)	11 340 kg (25,000 lb) 25 m/min (82 fpm)	13 608 kg (30,000 lb) 21 m/min (68 fpm)	15 876 kg (35,000 lb) 18 m/min (59 fpm)	18 144 kg (40,000 lb) 16 m/min (51 fpm)

Winch	Fourth layer pull	Allowable cable pull
Standard planetary and auxiliary planetary	2268 kg (5000 lb) high speed 5103 kg (11,250 lb) low speed	5117 kg (11,280 lb) 5117 kg (11,280 lb)

Block type	Rating	Weight
Aux boom head		45 kg (100 lb)
Downhaul weight	4,53 USt (7 USt)	78 kg (172 lb)
1-sheave block	13,60 t (20 USt)	149 kg (329 lb)
2-sheave block	22,67 t (30 USt)	290 kg (640 lb)
3-sheave block	31,74 t (40 USt)	272 kg (600 lb)
4-sheave block	32,65 t (50 USt)	361 kg (796 lb)

USED TO OPERATE THE CRANE.
The individual crane's load chart, operating instructions and other instructional plates must be read and understood prior to operating the crane.
Courtesy of Crane.Market

Mounting configurations

The configurations are based on the Series NBT45 with an 85% stability factor. The complete unit must be installed in accordance with factory requirements and a test performed to determine actual stability and counterweight requirements since individual truck chassis vary.

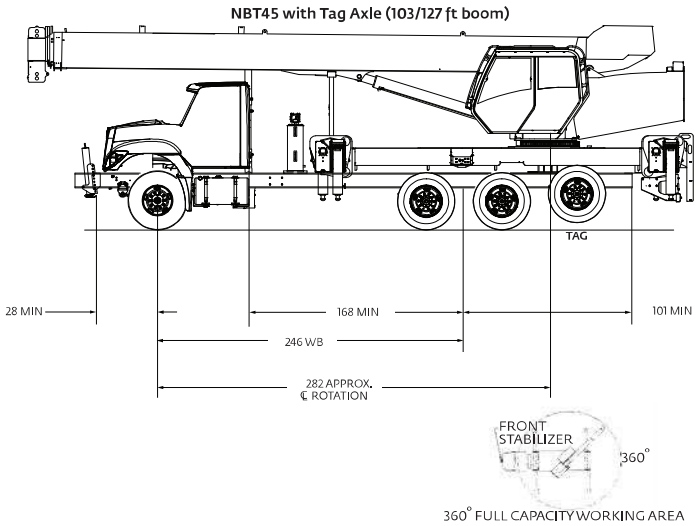

Configuration 1: 31,39 m (103 ft) or 38,71 m (127 ft) Boom with Tag Axle
Working area: 360°
Gross Axle Weight Rating Front: 9072 kg (20,000 lb)
Gross Axle Weight Rating Rear: 18 144 kg (40,000 lb)
Tag Axle Weight Rating: 5987 kg (13,200 lb)
Wheelbase: 625 cm (246 in)
Cab to Axle/trunnion (CA/CT): 427 cm (168 in)
Frame Section Modulus (SM), front axle to end of AF: 785 MPa (110,000 PSI): 426 cm^3 (30.0 in^3)
Stability Weight, Front: 4286 kg (9450 lb) minimum*
Stability Weight, Rear: 4899 kg (10,800 lb) minimum*
This configuration shows the 360° working area that is achieved with the front stabilizer (standard on the Series NBT45). The front stabilizer is essential when extending the boom and lifting loads over the front of the truck. NOTE: Chassis will require extended front frame rails for SFO mounting.
*Estimated axle scale weights prior to installation of crane, stabilizers and subbase for 85% stability.

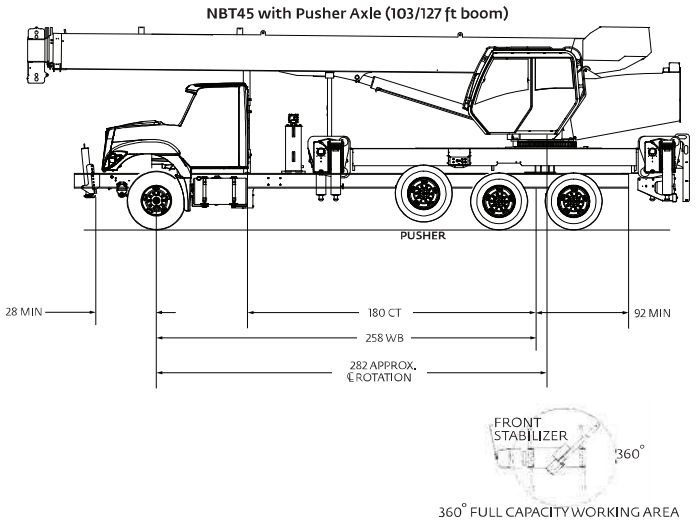

Configuration 2: 31,39 m (103 ft) or 38,71 m (127 ft) Boom with Pusher Axle
Working area: 360°
Gross Axle Weight Rating Front: 9072 kg (20,000 lb)
Gross Axle Weight Rating Rear: 18 144 kg (40,000 lb)
Pusher Axle Weight Rating: 5987 kg (13,200 lb)
Wheelbase: 655 cm (258 in)
Cab to Axle/trunnion (CA/CT): 457 cm (180 in)
Frame Section Modulus (SM), front axle to end of AF: 785 MPa (110,000 PSI): 426 cm^3 (30.0 in^3)
Stability Weight, Front: 4525 kg (9975 lb) minimum*
Stability Weight, Rear: 4661 kg (10,275 lb) minimum*
This configuration shows the 360° working area that is achieved with the front stabilizer (standard on the Series NBT45). The front stabilizer is essential when extending the boom and lifting loads over the front of the truck. NOTE: Chassis will require extended front frame rails for SFO mounting.
*Estimated axle scale weights prior to installation of crane, stabilizers and subbase for 85% stability.

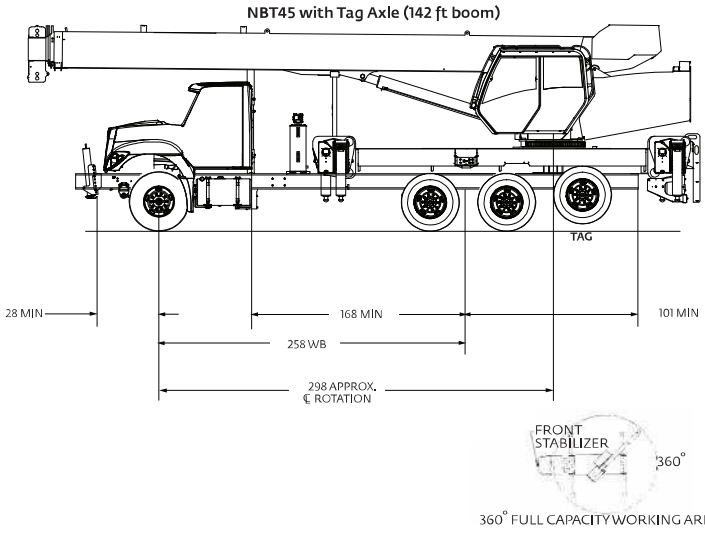

Configuration 3: 43,29 m (142 ft) Boom with Tag Axle
Working area: 360°
Gross Axle Weight Rating Front: 9072 kg (20,000 lb)
Gross Axle Weight Rating Rear: 18 144 kg (40,000 lb)
Tag Axle Weight Rating: 5987 kg (13,200 lb)
Wheelbase: 655 cm (258 in)
Cab to Axle/trunnion (CA/CT): 427 cm (168 in)
Frame Section Modulus (SM), front axle to end of AF: 785 MPa (110,000 PSI): 426 cm^3 (30.0 in^3)
Stability Weight, Front: 4207 kg (9275 lb) minimum*
Stability Weight, Rear: 4797 kg (10,575 lb) minimum*
This configuration shows the 360° working area that is achieved with the front stabilizer (standard on the Series NBT45). The front stabilizer is essential when extending the boom and lifting loads over the front of the truck. NOTE: Chassis will require extended front frame rails for SFO mounting.
*Estimated axle scale weights prior to installation of crane, stabilizers and subbase for 85% stability.

Courtesy of Crane.Market

Mounting configurations

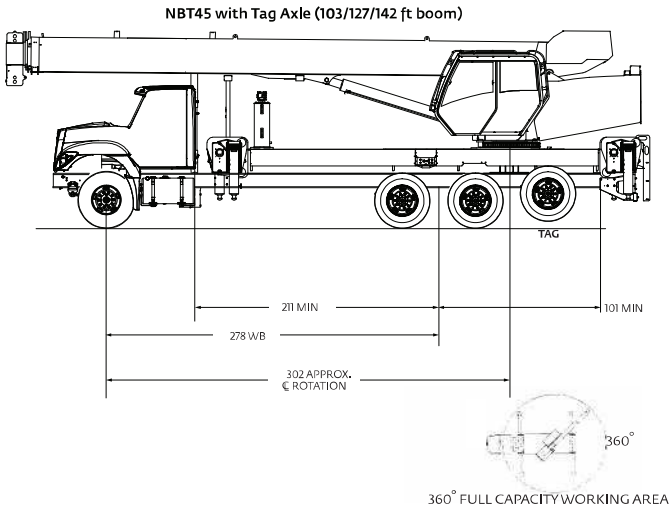

Configuration 4: Extended T-box 31,39 m (103 ft), 38,71 m (127 ft) or 43,29 m (142 ft) Boom with Tag Axle
Working area: 360°
Gross Axle Weight Rating Front: 9072 kg (20,000 lb)
Gross Axle Weight Rating Rear: 18 144 kg (40,000 lb)
Tag Axle Weight Rating: 5987 kg (13,200 lb)
Wheelbase: 686 cm (270 in)
Cab to Axle/trunnion (CA/CT): 516 cm (203 in)
Frame Section Modulus (SM), front axle to end of AF: 785 MPa (110,000 PSI): 426 cm^3 (30.0 in^3)
Stability Weight, Front: 4309 kg (9500 lb) maximum*
Stability Weight, Rear: 5103 kg (11,250 lb) minimum*
*Estimated axle scale weights prior to installation of crane, stabilizers and subbase for 85% stability.

Other configurations are available, please consult the factory for more information.

Mimimum truck requirements

Many factors must be considered in the selection of proper truck for a NBT45 series crane. Items which must be considered are:

1. Axle Rating. Axle ratings are determined by the axles, tires, rims, springs, brakes, steering and frame strength of the truck. If any one of these components is below the required rating, the gross axle rating is reduced to its weakest component value.

2. Wheelbase (WB), Cab-to-Trunnion (CT) and Bare Chassis Weight. The wheelbase, CT and chassis weights shown are required so the basic NBT45 can be legally driven in most states and meet stability requirements. The dimensions given assume the sub-base is installed properly behind the truck cab. If exhaust stacks, transmission protrusions, etc., do not allow a close installation to the cab, the WB and CT dimensions must be increased. Refer to the Mounting Configuration pages for additional information.

3. Truck Frame. Try to select a truck frame that will minimize or eliminate frame reinforcement or extension of the after frame (AF). Many frames are available that have the necessary after frame (AF) section modulus (SM) and resistance to bending moment (RBM) so that reinforcing is not required. The front hydraulic jack is used for a 360° working range around the truck. The frame under the cab through the front suspension must have the minimum S.M. and RBM because reinforcing through the front suspension is often difficult because of engine, radiator mounts and steering mechanics. See "Truck Requirements" and "Frame Strength" pages for the necessary section modulus and resistance to bending moment values. Integral extended front frame rails are required for front center stabilizer installation.

4. Additional Equipment. In addition to the axle ratings, wheelbase, cab-to-axle requirements and frame, it is recommended that the truck is equipped with electronic engine control, increased cooling and a transmission with a PTO opening available with an extra heavy duty PTO. A conventional cab truck should be used for standard crane mounts.

5. Neutral Start Switch. The chassis must be equipped with a switch that prevents operation of the engine starter when the transmission is in gear.

Notes:
• Gross Vehicle Weight Rating (GVWR) is dependent on all components of the vehicle (axles, tires, springs, frame, etc.) meeting manufacturers' recommendations; always specify GVWR when purchasing trucks
• Diesel engines require a variable speed governor for smooth crane operation; electronic fuel injection requires EET engine remote throttle
• All mounting data is based on a National Crane Series NBT45 with an 85% stability factor.
• The complete unit must be installed in accordance with factory requirements, and a test performed to determine actual stability and counterweight requirements per SAE J765; contact the factory for details

Courtesy of Crane.Market

Dimensions

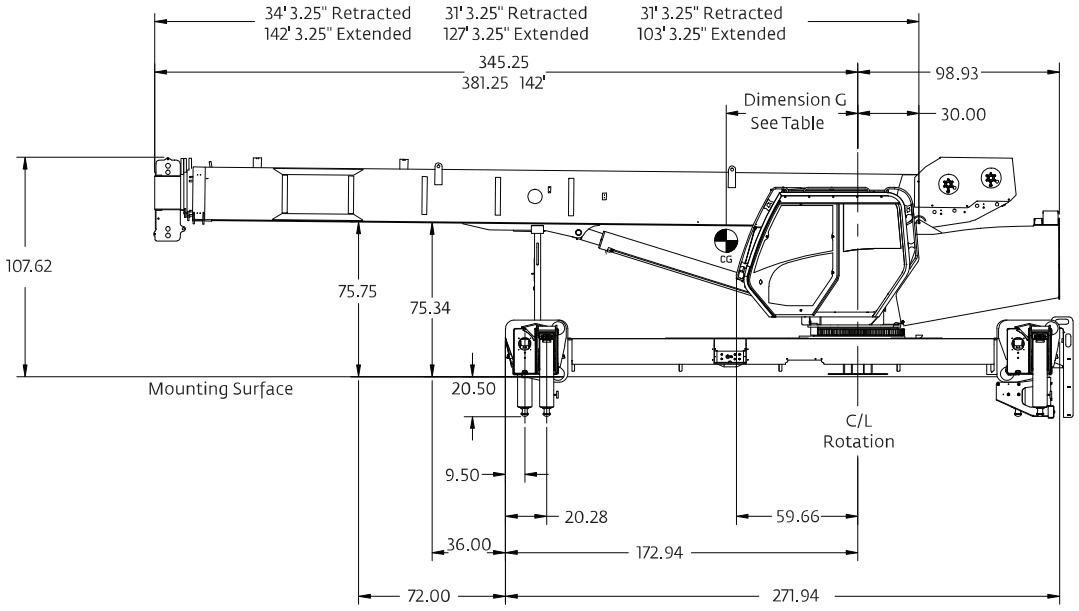

Dimensions are in inches unless otherwise specifiied.

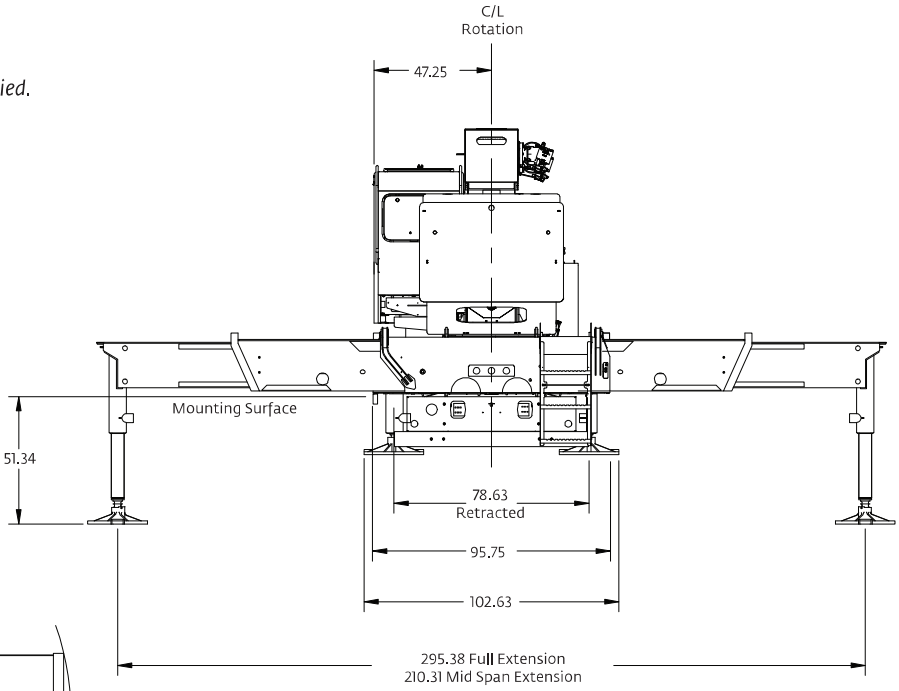

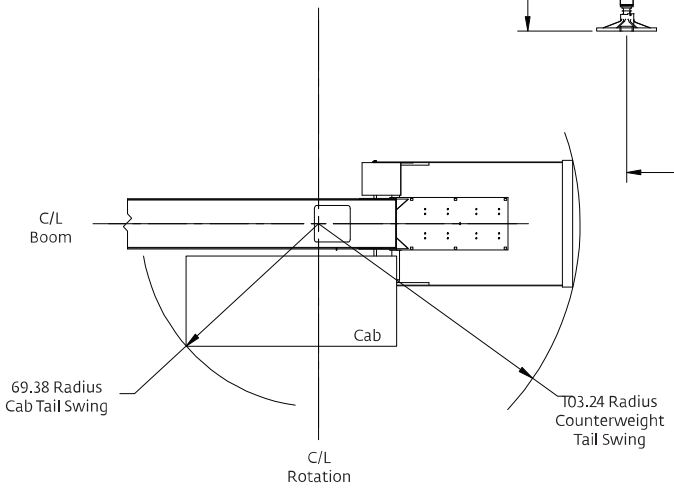

Weight/CG Data		
Series	**Dimension G**	**Weight with oil**
NBT45103	52 in	39,679 lb
NBT45127	56 in	40,989 lb
NBT45142	64 in	42,284 lb

No jib, no auxiliary hoist, with 2/3 hookblock.

Courtesy of Crane.Market

Working range

103 ft main boom, full span outrigger, with 31 ft - 55 ft jib

Boom deflection not shown

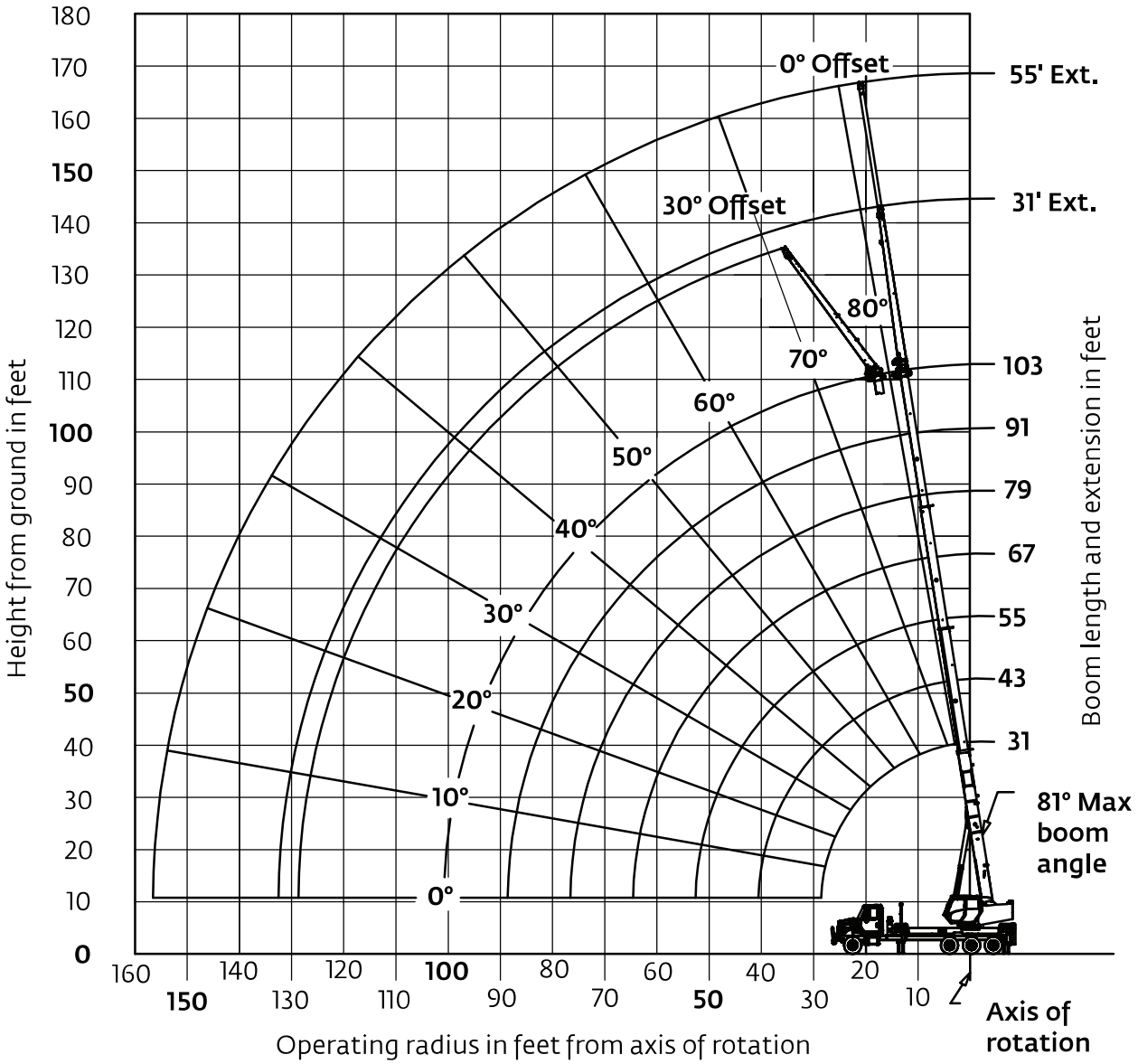

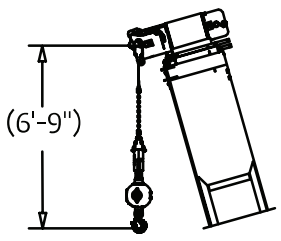

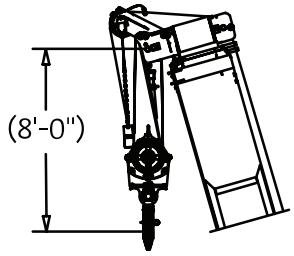

Dimensions are for largest furnished hookblock and headache ball with anti-two block activated.

*Drawing is to show the physical reach of the machine. Always refer to load chart to see what portions of this range are structurally and stability limited.

THIS CHART IS ONLY A GUIDE AND SHOULD NOT BE USED TO OPERATE THE CRANE.
The individual crane's load chart, operating instructions and other instructional plates must be read and understood prior to operating the crane.

Courtesy of Crane.Market

Load chart

103 ft main boom, full span outrigger, without jib

Radius in feet	#01						
	Main boom length in feet						
	31	43-A	55-B	67-C	79-D	91-E	103
7	90,000 (73.6)						
8	82,000 (71.6)	51,000 (76.9)					
10	69,950 (67.6)	51,000 (74.1)	50,000 (78)				
12	58,000 (63.4)	50,000 (71.2)	47,000 (75.8)	37,000 (78.7)			
15	45,700 (56.9)	46,050 (66.9)	40,000 (72.5)	36,000 (76.1)	33,000 (78.7)		
20	33,150 (44.5)	33,550 (59.1)	33,700 (66.8)	33,800 (71.7)	29,000 (75.1)	18,500 (77.3)	18,500 (79.5)
25	25,400 (28)	25,800 (50.7)	26,050 (60.8)	26,150 (66.9)	26,250 (71.2)	18,000 (74.2)	17,500 (76.8)
30		20,650 (40.9)	20,850 (54.4)	21,000 (62)	21,050 (67.2)	17,500 (71)	16,500 (74)
35		16,200 (28.6)	16,450 (47.5)	16,650 (56.9)	16,750 (63.1)	16,200 (67.6)	15,000 (71.1)
40			13,200 (39.6)	13,350 (51.4)	13,450 (58.8)	13,600 (64.1)	13,500 (68.2)
45			10,900 (30)	11,050 (45.5)	11,150 (54.2)	11,150 (60.4)	11,250 (65.1)
50			9000 (17.5)	9200 (39.5)	9300 (49.9)	9400 (56.9)	9500 (62.1)
55				7700 (31.8)	7800 (44.7)	7900 (52.8)	8000 (58.7)
60				6500 (21.7)	6600 (39)	6700 (48.5)	6750 (55.1)
65					5600 (32.4)	5700 (43.9)	5750 (51.4)
70					4750 (24.3)	4850 (38.8)	4900 (47.5)
75					4000 (11.2)	4100 (33.1)	4200 (43.3)
80						3500 (26.3)	3550 (38.8)
85						2950 (16.8)	3000 (33.7)
90							2550 (27.8)
95							2100 (20.2)
100							1700 (4.7)
Minimum boom angle (°) for indicated length (no load)							0
Maximum boom length (ft) at 0° boom angle (no load)							103

NOTE: Loads displayed in pounds. ( ) Boom angles are in degrees.
#LMI operating code. Refer to LMI manual for operating instructions.

Lifting capacities at zero degree boom angle							
Boom angle	Main boom length in feet						
	31	43-A	55-B	67-C	79-D	91-E	103
0°	21,850 (28.5)	13,150 (40.5)	8450 (52.5)	5650 (64.5)	3850 (76.5)	2650 (88.5)	1600 (100.5)

NOTE: ( ) Reference radii in feet. 80026252

Rated Load Reductions from main boom capacity when lifting over main boom nose with :							
tele. erected (retracted)	2300	2150	2000	1950	1900	1850	1800
31' off. erected at 0° offset	1800	1700	1550	1500	1450	1450	1400

THIS CHART IS ONLY A GUIDE AND SHOULD NOT BE USED TO OPERATE THE CRANE.
The individual crane's load chart, operating instructions and other instructional plates must be read and understood prior to operating the crane.

Courtesy of Crane.Market

Load chart

103 ft main boom, full span outrigger, with 31 ft - 55 ft jib

Radius in feet	#02						
	Main boom length in feet						
	31	43-A	55-B	67-C	79-D	91-E	103
7	89,200 (73.6)						
8	81,200 (71.6)	50,350 (76.9)					
10	69,150 (67.6)	50,350 (74.1)	49,550 (78)				
12	57,200 (63.4)	49,350 (71.2)	46,550 (75.8)	36,600 (78.7)			
15	44,900 (56.9)	45,400 (66.9)	39,550 (72.5)	35,600 (76.1)	32,650 (78.7)		
20	32,350 (44.5)	32,900 (59.1)	33,250 (66.8)	33,400 (71.7)	28,650 (75.1)	18,200 (77.3)	18,250 (79.5)
25	24,600 (28)	25,150 (50.7)	25,600 (60.8)	25,750 (66.9)	25,900 (71.2)	17,700 (74.2)	17,250 (76.8)
30		20,000 (40.9)	20,400 (54.4)	20,600 (62)	20,700 (67.2)	17,200 (71)	16,250 (74)
35		15,550 (28.6)	16,000 (47.5)	16,250 (56.9)	16,400 (63.1)	15,900 (67.6)	14,750 (71.1)
40			12,750 (39.6)	12,950 (51.4)	13,100 (58.8)	13,300 (64.1)	13,250 (68.2)
45			10,450 (30)	10,650 (45.5)	10,800 (54.2)	10,850 (60.4)	11,000 (65.1)
50			8550 (17.5)	8800 (39.5)	8950 (49.9)	9100 (56.9)	9250 (62.1)
55				7300 (31.8)	7450 (44.7)	7600 (52.8)	7750 (58.7)
60				6100 (21.7)	6250 (39)	6400 (48.5)	6500 (55.1)
65					5250 (32.4)	5400 (43.9)	5500 (51.4)
70					4400 (24.3)	4550 (38.8)	4650 (47.5)
75					3650 (11.2)	3800 (33.1)	3950 (43.3)
80						3200 (26.3)	3300 (38.8)
85						2650 (16.8)	2750 (33.7)
90							2300 (27.8)
95							1850 (20.2)
100							1450 (4.7)
Minimum boom angle (°) for indicated length (no load)							0
Maximum boom length (ft) at 0° boom angle (no load)							103

NOTE: Loads displayed in pounds. ( ) Boom angles are in degrees.
#LMI operating code. Refer to LMI manual for operating instructions.

Lifting capacities at zero degree boom angle							
Boom angle	Main boom length in feet						
	31	43-A	55-B	67-C	79-D	91-E	103
0°	21,050 (28.5)	12,500 (40.5)	8000 (52.5)	5250 (64.5)	3500 (76.5)	2350 (88.5)	1350 (100.5)

NOTE: ( ) Reference radii in feet. 80026255

Rated Load Reductions from main boom capacity when lifting over main boom nose with :							
tele. erected (retracted)	2300	2150	2000	1950	1900	1850	1800
31' off. erected at 0° offset	1800	1700	1550	1500	1450	1450	1400

Radius in feet	0° OFFSET
	#06
25	8800 (80)
38	8000 (75)
49	6500 (70)
60	5100 (65)
70	4100 (60)
79	3300 (55)
88	2600 (50)
96	1900 (45)
103	1350 (40)
110	950 (35)
115	650 (30)
Min. boom angle for indicated length (no load)	25.1°
Max. boom length at 0° boom angle (no load)	103 ft

Radius in feet	30° OFFSET
	#09
39	6400 (80)
50	5700 (75)
60	5000 (70)
70	4200 (65)
79	3600 (60)
87	3000 (55)
95	2500 (50)
102	2000 (45)
108	1550 (40)
113	1200 (35)
118	1000 (30)
122	750 (25)
124	650 (21)
Min. boom angle for indicated length (no load)	20°
Max. boom length at 0° boom angle (no load)	103 ft

80026258A

NOTE: Loads displayed in pounds.
( ) Boom angles are in degrees.
#LMI operating code. Refer to LMI manual for operating instructions.

Boom extension capacity notes:

1. All capacities above the bold line are based on structural strength of boom extension.
2. 31 ft offsettable extension length may be used for single line lifting service
3. Radii listed are for a fully extended boom with the boom extension erected. For main boom lengths less than fully extended, the rated loads are determined by boom angle. For boom angles not shown, use the rating of the next lower angle. **Warning:** Operation of this machine with heavier loads than the capacities listed is strictly prohibited. Machine tipping with boom extension occurs rapidly and without advance warning.
4. Boom angle is the angle above or below horizontal of the longitudinal axis of the boom base section after lifting rated load.
5. Capacities listed are with outriggers properly extended and vertical jacks set.
6. When lifting over the main boom nose with 31 ft offsettable extension erected, the outriggers must be fully extended or 50% (17.5 ft) spread.

THIS CHART IS ONLY A GUIDE AND SHOULD NOT BE USED TO OPERATE THE CRANE.
The individual crane's load chart, operating instructions and other instructional plates must be read and understood prior to operating the crane.

Courtesy of Crane.Market

Working range

127 ft main boom, full span outrigger, with 31 ft - 55 ft jib

Boom deflection not shown

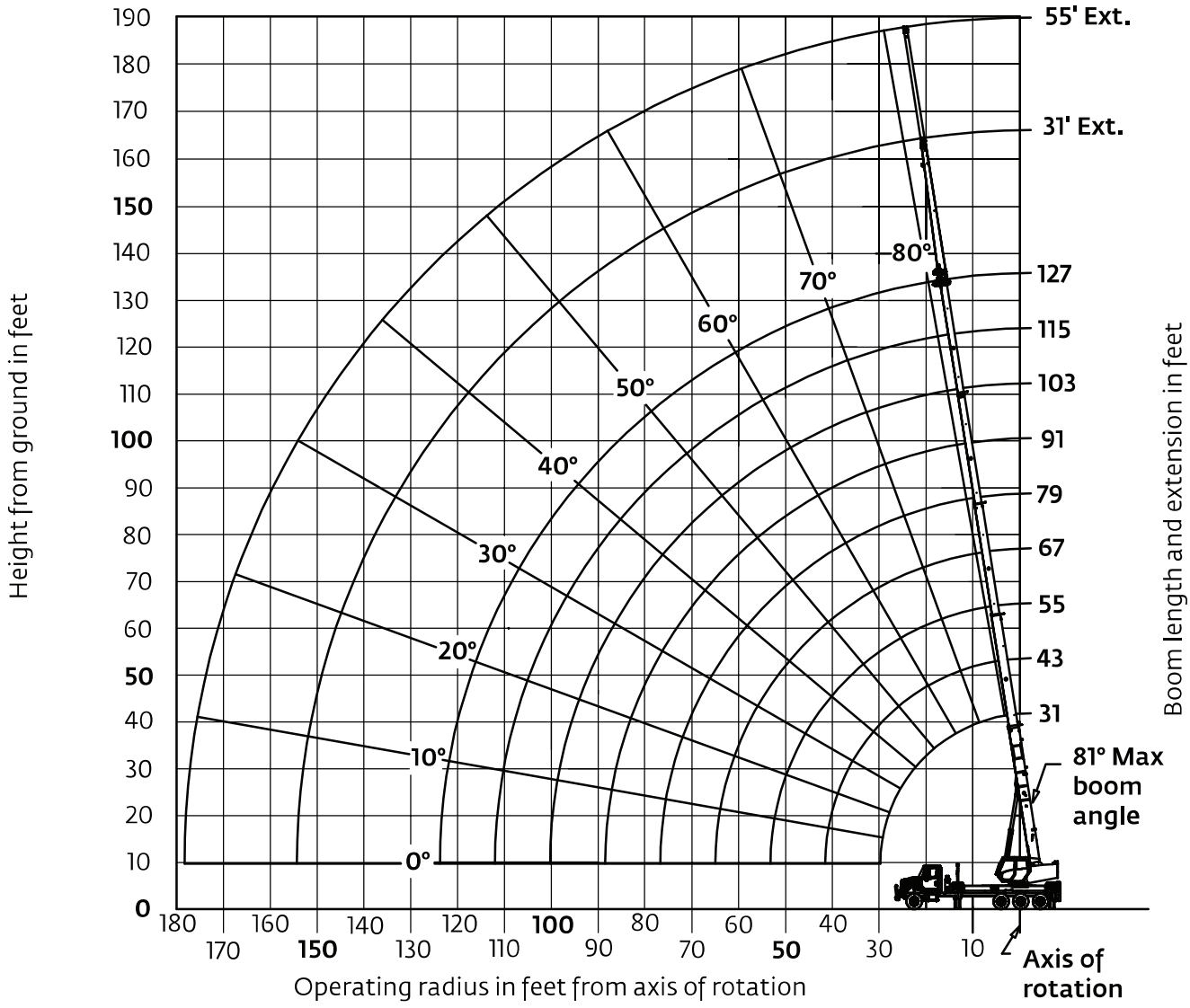

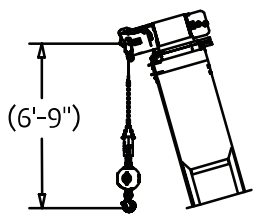

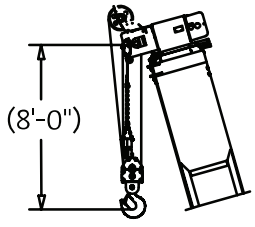

Dimensions are for largest furnished hookblock and headache ball with anti-two block activated.

*Drawing is to show the physical reach of the machine. Always refer to load chart to see what portions of this range are structurally and stability limited.

Courtesy of Crane.Market

Load chart

127 ft main boom, full span outrigger, without jib

Radius in feet	#01								
	Main boom length in feet								
	31	43-A	55-B	67-C	79-D	91-E	103-F	115-G	127
7	90,000 (73.6)								
8	81,400 (71.6)								
10	69,600 (67.6)	41,000 (74.2)							
12	57,600 (63.4)	41,000 (71.4)	40,500 (75.8)	40,300 (78.8)					
15	45,300 (56.8)	39,000 (67)	40,500 (72.6)	37,300 (76.2)	28,700 (78.6)	21,850 (80.4)			
20	32,700 (44.4)	33,200 (59.4)	33,600 (66.9)	33,400 (71.7)	25,100 (74.9)	19,400 (77.2)	16,300 (79.2)	12,850 (80.7)	
25	24,900 (27.8)	25,450 (51)	25,900 (61)	26,100 (67)	22,200 (71.1)	17,250 (74)	14,950 (76.5)	12,600 (78.4)	10,000 (79.9)
30		20,250 (41.4)	20,700 (54.6)	20,900 (62.1)	20,150 (67.2)	15,650 (70.8	13,700 (73.7)	11,800 (76)	9900 (77.9)
35		16,450 (29.4)	16,950 (47.8)	17,100 (57)	17,300 (63.1)	14,450 (67.4)	12,650 (70.8)	10,950 (73.7)	9500 (75.8)
40			13,450 (40)	13,650 (51.6)	13,850 (58.8)	13,250 (63.9)	11,600 (67.9)	10,300 (71.2)	9000 (73.6)
45			11,050 (30.6)	11,200 (45.7)	11,350 (54.3)	11,500 (60.3)	10,700 (65.1)	9600 (68.6)	8600 (71.4)
50			9100 (18.5)	9400 (39.8)	9550 (50)	9700 (56.8)	9850 (62)	9000 (65.9)	8100 (69)
55				7850 (32.2)	8050 (44.8)	8150 (52.7)	8300 (58.6)	8350 (63.1)	7650 (66.7)
60				6600 (22.3)	6800 (39.2)	6900 (48.4)	7050 (55.1)	7150 (60.1)	7200 (64.2)
65					5750 (32.7)	5900 (43.9)	6000 (51.4)	6100 (57)	6200 (61.5)
70					4900 (24.7)	5000 (38.9)	5,150 (47.5)	5200 (53.7)	5300 (58.6)
75					4150 (12.4)	4300 (33.2)	4400 (43.3)	4450 (50.3)	4550 (55.7)
80						3650 (26.5)	3750 (38.8)	3800 (46.8)	3,900 (52.7)
85						3050 (17.4)	3200 (33.8)	3250 (43)	3350 (49.5)
90							2700 (28)	2750 (38.9)	2850 (46.2)
95							2250 (20.6)	2,300 (34.3)	2400 (42.7)
100							1850 (7.1)	1950 (29.2)	2000 (38.9)
105								1550 (22.9)	1650 (34.8)
110								1250 (13.9)	1300 (30.1)
115									1000 (24.7)
Minimum boom angle (°) for indicated length (no load)									0
Maximum boom length (ft) at 0° boom angle (no load)									127

NOTE: Loads displayed in pounds. ( ) Boom angles are in degrees.
#LMI operating code. Refer to LMI manual for operating instructions.

Lifting capacities at zero degree boom angle									
Boom angle	Main boom length in feet								
	31	43	55	67	79	91	103	115	
0°	21,200 (28.5)	12,900 (40.5)	8200 (52.5)	5600 (64.5)	3900 (76.5)	2700 (88.5)	1800 (100.5)	1100 (112.5)	

NOTE: ( ) Reference radii in feet. 80025872

Rated Load Reductions from main boom capacity when lifting over main boom nose with ext. erected (retracted) :									
(in lb)	2300	2150	2000	1950	1900	1850	1800	1750	1700

THIS CHART IS ONLY A GUIDE AND SHOULD NOT BE USED TO OPERATE THE CRANE.
The individual crane's load chart, operating instructions and other instructional plates must be read and understood prior to operating the crane.

Courtesy of Crane.Market

Load chart

127 ft main boom, full span outrigger, with 31 ft - 55 ft jib

Radius in feet	#02								
	Main boom length in feet								
	31	43-A	55-B	67-C	79-D	91-E	103-F	115-G	127
7	89,200 (73.6)								
8	80,600 (71.6)								
10	68,800 (67.6)	40,350 (74.2)							
12	56,800 (63.4)	40,350 (71.4)	40,050 (75.8)	39,900 (78.8)					
15	44,500 (56.8)	38,350 (67)	40,050 (72.6)	36,900 (76.2)	28,350 (78.6)	21,550 (80.4)			
20	31,900 (44.4)	32,550 (59.4)	33,150 (66.9)	33,000 (71.7)	24,750 (74.9)	19,100 (77.2)	16,050 (79.2)	12,600 (80.7)	
25	24,100 (27.8)	24,800 (51)	25,450 (61)	25,700 (67)	21,850 (71.1)	16,950 (74)	14,700 (76.5)	12,350 (78.4)	9800 (79.9)
30		19,600 (41.4)	20,250 (54.6)	20,500 (62.1)	19,800 (67.2)	15,350 (70.8	13,450 (73.7)	11,550 (76)	9700 (77.9)
35		15,800 (29.4)	16,500 (47.8)	16,700 (57)	16,950 (63.1)	14,150 (67.4)	12,400 (70.8)	10,700 (73.7)	9300 (75.8)
40			13,000 (40)	13,250 (51.6)	13,500 (58.8)	12,950 (63.9)	11,350 (67.9)	10,050 (71.2)	8800 (73.6)
45			10,600 (30.6)	10,800 (45.7)	11,000 (54.3)	11,200 (60.3)	10,450 (65.1)	9350 (68.6)	8400 (71.4)
50			8650 (18.5)	9000 (39.8)	9200 (50)	9400 (56.8)	9600 (62)	8750 (65.9)	7900 (69)
55				7450 (32.2)	7700 (44.8)	7850 (52.7)	8050 (58.6)	8100 (63.1)	7450 (66.7)
60				6200 (22.3)	6450 (39.2)	6600 (48.4)	6800 (55.1)	6900 (60.1)	7000 (64.2)
65					5400 (32.7)	5600 (43.9)	5750 (51.4)	5850 (57)	6000 (61.5)
70					4550 (24.7)	4700 (38.9)	4900 (47.5)	4950 (53.7)	5100 (58.6)
75					3800 (12.4)	4000 (33.2)	4150 (43.3)	4200 (50.3)	4350 (55.7)
80						3350 (26.5)	3500 (38.8)	3550 (46.8)	3700 (52.7)
85						2750 (17.4)	2950 (33.8)	3000 (43)	3150 (49.5)
90							2450 (28)	2500 (38.9)	2650 (46.2)
95							2000 (20.6)	2050 (34.3)	2200 (42.7)
100							1600 (7.1)	1700 (29.2)	1800 (38.9)
105								1300 (22.9)	1450 (34.8)
110								1000 (13.9)	1100 (30.1)
115									800 (24.7)
Minimum boom angle (°) for indicated length (no load)									0
Maximum boom length (ft) at 0° boom angle (no load)									127

NOTE: Loads displayed in pounds. ( ) Boom angles are in degrees.
#LMI operating code. Refer to LMI manual for operating instructions.

Lifting capacities at zero degree boom angle									
Boom angle	Main boom length in feet								
	31	43	55	67	79	91	103	115	
0°	20,400 (28.5)	12,250 (40.5)	7750 (52.5)	5200 (64.5)	3550 (76.5)	2400 (88.5)	1550 (100.5)	850 (112.5)	

NOTE: ( ) Reference radii in feet. 80026003

Radius in feet	31 ft LENGTH
	#03
30	3400 (80)
46	3200 (75)
60	2700 (70)
73	2100 (65)
85	1700 (60)
96	1200 (55)
106	650 (50)
Min. boom angle for indicated length (no load)	40.2°
Max. boom length at 0° boom angle (no load)	91 ft

Radius in feet	55 ft LENGTH
	#04
36	2200 (80)
54	2200 (75)
70	1600 (70)
85	1000 (65)
Min. boom angle for indicated length (no load)	42.8°
Max. boom length at 0° boom angle (no load)	91 ft

80025875

NOTE: Loads displayed in pounds.
( ) Boom angles are in degrees.
#LMI operating code. Refer to LMI manual for operating instructions.

Boom extension capacity notes:

1. All capacities above the bold line are based on structural strength of boom extension.
2. 31 ft and 55 ft extension lengths may be used for single line lifting service
3. Radii listed are for a fully extended boom with the boom extension erected. For main boom lengths less than fully extended, the rated loads are determined by boom angle. For boom angles not shown, use the rating of the next lower angle.
   Warning: Operation of this machine with heavier loads than the capacities listed is strictly prohibited. Machine tipping with boom extension occurs rapidly and without advance warning.
4. Boom angle is the angle above or below horizontal of the longitudinal axis of the boom base section after lifting rated load.
5. Capacities listed are with outriggers properly extended and vertical jacks set.
6. When lifting over the main boom nose with 31 ft or 55 ft extension erected, the outriggers must be fully extended or 50% (17.5 ft) spread.

Courtesy of Crane.Market

Working range

142 ft main boom, full span outrigger, with 31 ft - 55 ft jib

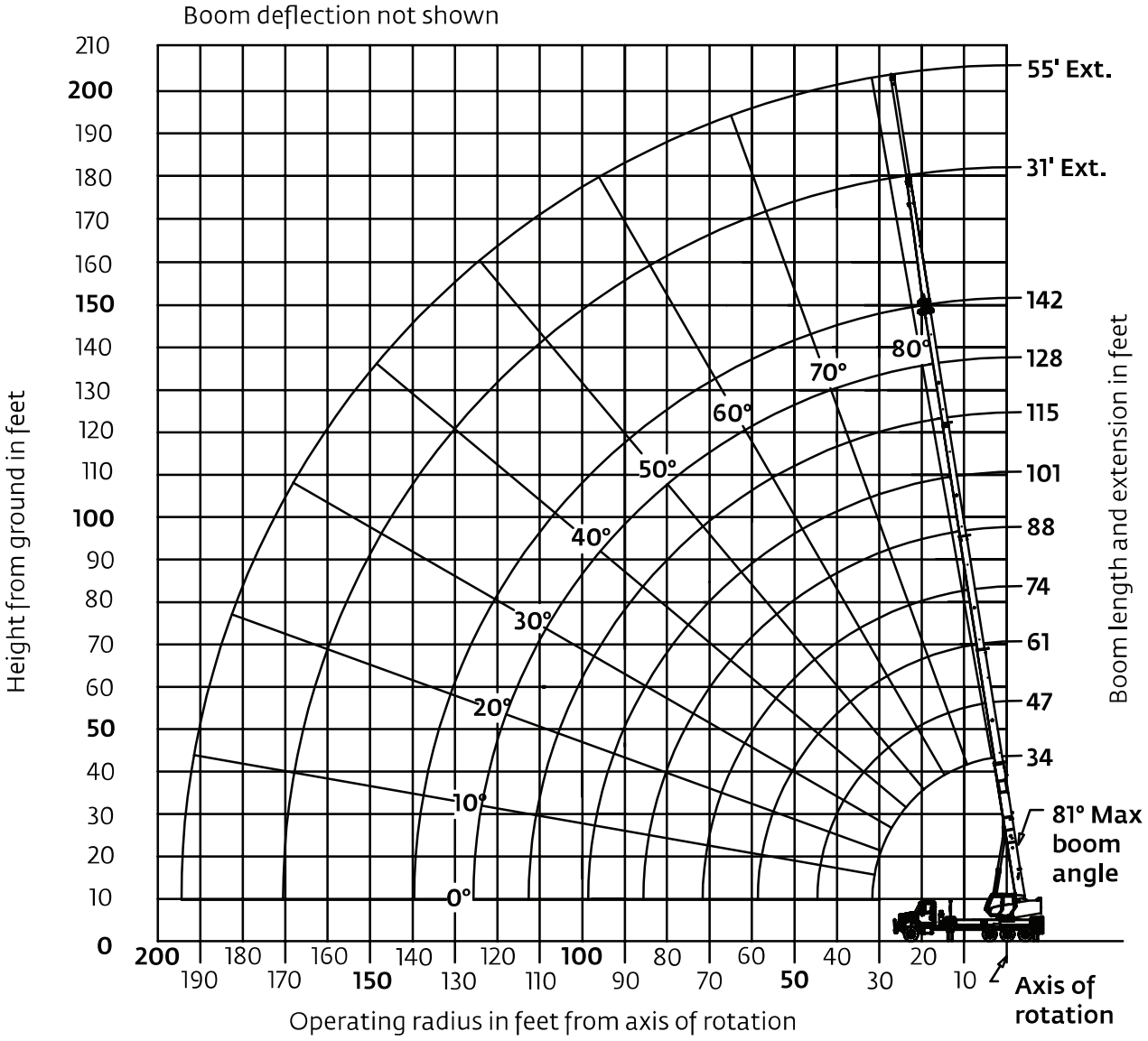

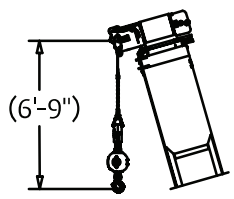

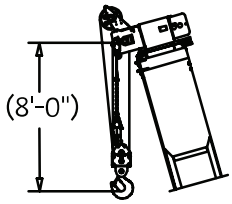

Dimensions are for largest furnished hookblock and headache ball with anti-two block activated.

*Drawing is to show the physical reach of the machine. Always refer to load chart to see what portions of this range are structurally and stability limited.

THIS CHART IS ONLY A GUIDE AND SHOULD NOT BE USED TO OPERATE THE CRANE.
The individual crane's load chart, operating instructions and other instructional plates must be read and understood prior to operating the crane.

Courtesy of Crane.Market

Load chart

142 ft main boom, full span outrigger, without jib

Radius in feet	#01								
	Main boom length in feet								
	34	47-A	61-B	74-C	88-D	101-E	115-F	128-G	142
7	90,000 (74.9)								
8	79,600 (73.1)								
10	68,200 (69.4)	40,000 (75.6)							
12	57,100 (65.7)	40,000 (73.1)	40,000 (77.4)						
15	44,750 (59.7)	40,000 (69.2)	39,500 (74.5)	35,200 (77.7)					
20	32,100 (48.9)	32,700 (62.3)	33,100 (69.5)	31,500 (73.7)	23,050 (76.7)	17,400 (78.8)			
25	24,300 (35.6)	24,950 (55)	25,300 (64.3)	25,550 (69.6)	20,700 (73.4)	15,750 (76)	13,000 (78.3)		
30	18,950 (13.5)	19,700 (46.9)	20,100 (58.8)	20,300 (65.2)	18,750 (70)	14,300 (73.1)	12,150 (75.8)	10,050 (78)	8000 (79.5)
35		15,900 (37.5)	16,300 (52.9)	16,500 (60.7)	16,700 (66.4)	13,200 (70.1)	11,150 (73.5)	9550 (75.8)	7600 (77.7)
40		13,000 (25.2)	13,400 (46.6)	13,650 (56.1)	13,850 (62.7)	12,200 (67.1)	10,400 (71)	9050 (73.7)	7450 (75.9)
45			11,200 (40.2)	11,400 (51.1)	11,550 (58.8)	11,100 (64.2)	9750 (68.4)	8550 (71.4)	7200 (74)
50			9400 (31.9)	9650 (46.2)	9800 (55.1)	10,000 (60.9)	9100 (65.7)	8050 (69.1)	6800 (72)
55			7750 (20.7)	8000 (40.4)	8200 (50.9)	8350 (57.5)	8500 (62.9)	7600 (66.7)	6550 (70)
60				6700 (33.7)	6900 (46.4)	7000 (53.8)	7150 (59.9)	7150 (64.3)	6200 (67.9)
65				5600 (25.4)	5800 (41.5)	5900 (50)	6050 (56.7)	6200 (61.6)	5600 (65.6)
70				4650 (12.7)	4850 (36)	5000 (46)	5100 (53.5)	5250 (58.8)	5350 (63.4)
75					4100 (29.7)	4200 (41.7)	4300 (50.1)	4450 (55.9)	4550 (60.9)
80					3400 (21.7)	3500 (37)	3650 (46.5)	3750 (52.9)	3850 (58.3)
85					2750 (7.2)	2950 (31.6)	3050 (42.8)	3100 (49.8)	3200 (55.6)
90						2400 (25.3)	2500 (38.7)	2600 (46.5)	2650 (52.9)
95						1950 (16.6)	2050 (34.1)	2100 (43.1)	2200 (50)
100							1600 (29)	1700 (39.4)	1750 (47)
105							1250 (22.7)	1300 (35.4)	1400 (43.9)
110							900 (13.8)	950 (30.9)	1050 (40.6)
Minimum boom angle (°) for indicated length (no load)							0	25.6	36.9
Maximum boom length (ft) at 0° boom angle (no load)							115		

NOTE: Loads displayed in pounds. ( ) Boom angles are in degrees.
#LMI operating code. Refer to LMI manual for operating instructions.

Lifting capacities at zero degree boom angle									
Boom angle	Main boom length in feet								
	34	47-A	61-B	74-C	88-D	101-E			
0°	17,950 (31.5)	11,200 (44.5)	6,750 (58.5)	4,400 (71.5)	2,700 (85.5)	1,600 (98.5)			

NOTE: ( ) Reference radii in feet. 80026636

Rated Load Reductions from main boom capacity when lifting over main boom nose with:									
tele. erected (retracted)	2300	2150	2000	1950	1900	1850	1800	1750	1700
26' erected	1050	1000	950	925	900	900	875	875	850

THIS CHART IS ONLY A GUIDE AND SHOULD NOT BE USED TO OPERATE THE CRANE.
The individual crane's load chart, operating instructions and other instructional plates must be read and understood prior to operating the crane.

Courtesy of Crane.Market

Load chart

142 ft main boom, full span outrigger, with 31 ft - 55 ft jib

Radius in feet	#02								
	Main boom length in feet								
	34	47-A	61-B	74-C	88-D	101-E	115-F	128-G	142
7	89,200 (74.9)								
8	78,800 (73.1)								
10	67,400 (69.4)	39,350 (75.6)							
12	56,300 (65.7)	39,350 (73.1)	39,550 (77.4)						
15	43,950 (59.7)	39,350 (69.2)	39,050 (74.5)	34,800 (77.7)					
20	31,300 (48.9)	32,050 (62.3)	32,650 (69.5)	31,100 (73.7)	22,650 (76.7)	17,050 (78.8)			
25	23,500 (35.6)	24,300 (55)	24,850 (64.3)	25,150 (69.6)	20,300 (73.4)	15,400 (76)	12,700 (78.3)		
30	18,150 (13.5)	19,050 (46.9)	19,650 (58.8)	19,900 (65.2)	18,350 (70)	13,950 (73.1)	11,850 (75.8)	9800 (78)	7800 (79.5)
35		15,250 (37.5)	15,850 (52.9)	16,100 (60.7)	16,300 (66.4)	12,850 (70.1)	10,850 (73.5)	9300 (75.8)	7400 (77.7)
40		12,350 (25.2)	12,950 (46.6)	13,250 (56.1)	13,450 (62.7)	11,850 (67.1)	10,100 (71)	8800 (73.7)	7250 (75.9)
45			10,750 (40.2)	11,000 (51.1)	11,150 (58.8)	10,750 (64.2)	9450 (68.4)	8300 (71.4)	7000 (74)
50			8950 (31.9)	9250 (46.2)	9400 (55.1)	9650 (60.9)	8800 (65.7)	7800 (69.1)	6600 (72)
55			7300 (20.7)	7600 (40.4)	7800 (50.9)	8000 (57.5)	8200 (62.9)	7350 (66.7)	6350 (70)
60				6300 (33.7)	6500 (46.4)	6650 (53.8)	6850 (59.9)	6900 (64.3)	6000 (67.9)
65				5200 (25.4)	5400 (41.5)	5550 (50)	5750 (56.7)	5950 (61.6)	5,400 (65.6)
70				4250 (12.7)	4450 (36)	4650 (46)	4800 (53.5)	5000 (58.8)	5150 (63.4)
75					3700 (29.7)	3850 (41.7)	4000 (50.1)	4200 (55.9)	4350 (60.9)
80					3000 (21.7)	3150 (37)	3350 (46.5)	3500 (52.9)	3650 (58.3)
85					2350 (7.2)	2600 (31.6)	2750 (42.8)	2850 (49.8)	3000 (55.6)
90						2050 (25.3)	2200 (38.7)	2350 (46.5)	2450 (52.9)
95						1600 (16.6)	1850 (34.1)	1850 (43.1)	2000 (50)
100							1300 (29)	1450 (39.4)	1550 (47)
105							950 (22.7)	1050 (35.4)	1200 (43.9)
110							600 (13.8)	700 (30.9)	850 (40.6)
Minimum boom angle (°) for indicated length (no load)							0	25.6	36.9
Maximum boom length (ft) at 0° boom angle (no load)							115		

NOTE: Loads displayed in pounds. ( ) Boom angles are in degrees.
#LMI operating code. Refer to LMI manual for operating instructions.

Lifting capacities at zero degree boom angle									
Boom angle	Main boom length in feet								
	34	47-A	61-B	74-C	88-D	101-E			
0°	17,150 (31.5)	10,550 (44.5)	6300 (58.5)	4000 (71.5)	2300 (85.5)	1250 (98.5)			

NOTE: ( ) Reference radii in feet. 80026639

Radius in feet	31 ft LENGTH
	#03
33	3400 (80)
50	3200 (75)
65	2700 (70)
79	2100 (65)
Min. boom angle for indicated length (no load)	50.6°
Max. boom length at 0° boom angle (no load)	88 ft

Radius in feet	55 ft LENGTH
	#04
40	2200 (80)
59	2200 (75)
76	1600 (70)
91	1000 (65)
Min. boom angle for indicated length (no load)	55°
Max. boom length at 0° boom angle (no load)	74 ft

80026645

NOTE: Loads displayed in pounds.
( ) Boom angles are in degrees.
#LMI operating code. Refer to LMI manual for operating instructions.

Boom extension capacity notes:

1. All capacities above the bold line are based on structural strength of boom extension.
2. 31 ft and 55 ft extension lengths may be used for single line lifting service
3. Radii listed are for a fully extended boom with the boom extension erected. For main boom lengths less than fully extended, the rated loads are determined by boom angle. For boom angles not shown, use the rating of the next lower angle.
   Warning: Operation of this machine with heavier loads than the capacities listed is strictly prohibited. Machine tipping with boom extension occurs rapidly and without advance warning.
4. Boom angle is the angle above or below horizontal of the longitudinal axis of the boom base section after lifting rated load.
5. Capacities listed are with outriggers properly extended and vertical jacks set.
6. When lifting over the main boom nose with 31 ft or 55 ft extension erected, the outriggers must be fully extended or 50% (17.5 ft) spread.

THIS CHART IS ONLY A GUIDE AND SHOULD NOT BE USED TO OPERATE THE CRANE.
The individual crane's load chart, operating instructions and other instructional plates must be read and understood prior to operating the crane.

Courtesy of Crane.Market

Accessories

Radio Remote Controls – (Ground level or boom tip) Eliminate the handling and maintenance concerns that accompany cabled remotes. Operate to a range of about 76 m (250 ft), varying with conditions.	• **NB4R (R4 functions)**
Heavy-duty Personnel Basket – 544 kg (1200 lb) capacity steel basket with safety loops for two passengers. Gravity leveling 183 cm x 107cm (72 in x 42 in) platform. Fast attachment and secure locking systems.	• **BSA-1** • **BSA-R1 (provides rotation)** • **BSAY-1** • **BSAY-2**
Air Conditioning for Crane Cab – Provides excellent crane cab cooling to overcome the radiant heat from the sun reflection.	• **A/C**
Auxiliary Winch 15,000 lb Line Pull – Second winch redundant to the main, planetary winch with boom tip "rooster sheave" to allow reeving of both winch lines.	• **NBT45AW**
Spanish-Language Danger Decals, Control Knobs, and Operators' Manuals	• **SDD** • **SOM**

Courtesy of Crane.Market

Manitowoc Cranes

Regional headquarters

Americas
Manitowoc, Wisconsin, USA
Tel: +1 920 684 6621
Fax: +1 920 683 6277

Shady Grove, Pennsylvania, USA
Tel: +1 717 597 8121
Fax: +1 717 597 4062

Europe, Middle East, Africa
Ecully, France
Tel: +33 (0)4 72 18 20 20
Fax: +33 (0)4 72 18 20 00

China
Shanghai, China
Tel: +86 21 6457 0066
Fax: +86 21 6457 4955

Greater Asia-Pacific
Singapore
Tel: +65 6264 1188
Fax: +65 6862 4040

Regional offices

Americas
Brazil
Alphaville
Mexico
Monterrey
Chile
Santiago

Europe, Middle East, Africa
Czech Republic
Netvorice
France
Baudemont
Cergy
Decines
Germany
Langenfeld
Hungary
Budapest
Italy
Lainate
Netherlands
Breda
Poland
Warsaw
Portugal
Baltar
Russia
Moscow
U.A.E.
Dubai
U.K.
Buckingham

China
Beijing
Chengdu
Guangzhou
Xian

Greater Asia-Pacific
Australia
Adelaide
Brisbane
Melbourne
Sydney
India
Calcutta
Chennai
Delhi
Hyderabad
Pune
Korea
Seoul
Philippines
Makati City
Singapore

Factories

Brazil
Alphaville
China
TaiAn
Zhangjiagang
France
Charlieu
Moulins
Germany
Wilhelmshaven
India
Pune
Italy
Niella Tanaro
Portugal
Baltar
Fânzeres
Slovakia
Saris
USA
Manitowoc
Port Washington
Shady Grove

This document is non-contractual. Constant improvement and engineering progress make it necessary that we reserve the right to make specification, equipment, and price changes without notice. Illustrations shown may include optional equipment and accessories and may not include all standard equipment.

©2011 Manitowoc
Form No. NBT45 PG
Part No. 09-008 / 2M /1111

www.manitowoc.com

Courtesy of Crane.Market