Technical Data

Specifications & Capacities

75|RT

Telescopic Boom Rough Terrain Crane
75 US ton
70 metric ton

CAUTION: This material is supplied for reference use only. Operator must refer to in—cab Crane Rating Manual and Operator's Manual to determine allowable crane lifting capacities and assembly and operating procedures.

Courtesy of CraneMarket.com

Courtesy of CraneMarket.com

Table Of Contents

Boom, Attachments, and Upper Structure **1**
Boom 1
Boom 1
Boom Wear Pads 1
Boom Head 1
Boom Elevation 1
Auxiliary Lifting Sheave 1
Hook Blocks and Balls − Optional 1
Fly − Optional 1
Operator's Cab and Controls 1
Swing 3
Electrical 3
Load Hoist System 3
Load Hoist Performance 3
Main and Auxiliary Winches 3
Hydraulic System 3
Counterweight 3
Carrier **4**
General 4
Outriggers 4
Steering and Axles 4
Suspension 4
Tires and Wheels 4
Brakes 4
Electrical 4
Engine 4
Transmission 4
Fuel Tank 4
Hydraulic System 5
Pump Drive 5
Maximum Speed 5
Paint 5
Additional Equipment Options 5
Gradeability 5
Axle Loads & Transport View **5**
General Dimensions **6**
Auxiliary Lifting Sheave **7**
Fly **7**
Counterweights **8**
Hook Balls **9**
Hook Blocks **9**
Working Range Diagram **10**
Boom Extend Modes **11**
Main Boom Lift Capacity Charts − Imperial **12**

Courtesy of CraneMarket.com

14,500lb Counterweight − Fully Extended Outriggers − 360° Rotation 12
Fly Attachment Lift Capacity Charts − Optional 13
14,500lb Counterweight − Fully Extended Outriggers − 360° Rotation 13
Main Boom + 10 ft Manual Offset Fly (2°, 15°, 30° & 45° Offsets) 13
14,500lb Counterweight − Fully Extended Outriggers − 360° Rotation 13
35 ft Manual Offset Fly 13
58 ft Manual Offset Fly 13
Main Boom Lift Capacity Charts − On Tires − 75% − Imperial 14
14,500lb Counterweight − On Tires − Stationary − Boom Centered Over The Front 14
14,500lb Counterweight − On Tires − Pick & Carry (Creep) − Boom Centered Over The Front 14
14,500lb Counterweight − On Tires − Pick & Carry (2.5mph) Boom Centered Over The Front 15
14,500lb Counterweight − On Tires − Stationary − 360° Rotation 15
Main Boom Lift Capacity Charts − 75% − Metric 16
6.6mt Counterweight − Fully Extended Outriggers − 360° Rotation 16
Fly Attachment Lift Capacity Charts − 75% Metric − Optional 17
6.6mt Counterweight − Fully Extended Outriggers − 360° Rotation 17
43.28m Main Boom Length − 10.7m Fly Length 17
43.28m Main Boom Length − 17.7m Fly Length 17
Main Boom Lift Capacity Charts − On Tires − 75% − Metric 18
6.6mt Counterweight −On Tires − Stationary − Boom Centered Over Front Between Tire Tracks . . . 18
6.6mt Counterweight − On Tires − Pick & Carry (Creep) Boom Centered Over The Front 18
6.6mt Counterweight − On Tires − Pick and Carry − 4 km/h (2.5mph) Boom Centered Over The Front 19
6.6mt Counterweight − On Tires − Stationary − 360° Rotation 19
Main Boom Lift Capacity Charts − 85% − Metric 20
8.8mt Counterweight − Fully Extended Outriggers − 360° Rotation 20
Fly Attachment Lift Capacity Charts − 85% Metric − Optional 21
6.6mt Counterweight − Fully Extended Outriggers − 360° Rotation 21
43.28m Main Boom Length − 10.7m Fly Length 21
43.28m Main Boom Length − 17.7m Fly Length 21

Courtesy of CraneMarket.com

Boom, Attachments, and Upper Structure

■ Boom

Design − Five section, formed construction of extra high tensile steel consisting of one base section and four telescoping sections.

Boom

- 38−142 ft (*11.58−43.28m*) five section full power boom
- Two boom extension modes controlled from the operator's cab provide superior capacities by varying the extension of the telescoping sections.
- EM1 mode extends sections T2, T3, and T4 proportionally to a 116 ft (*35.36m*) boom length. Next, section T1 extends to reach full 142 ft (*43.28m*) boom length.
- EM2 mode extends the T1 section to reach a 64 ft (*19.51m*) boom length. Next, sections T2, T3, and T4 extend proportionally to reach the full 142 ft (*43.28m*) boom length.
- Mechanical boom angle indicator
- Maximum tip height is 151 ft (*46m*).

Boom Wear Pads

- Wear pads with Teflon inserts that self−lubricate the boom sections
- Bottom wear pads are universal for some boom sections
- Top wear pads are universal for some boom sections

Boom Head

- Five 16.5 in (*41.9cm*) root diameter nylon sheaves to handle up to ten parts of line
- Easily removable wire rope guards
- Rope dead end lugs on each side of the boom head
- Boom head is designed for quick−reeve of the Hook Block
- Easily removable wireless anemometer
- Aviation obstruction solar marking light and flag − optional

Boom Elevation

- One double acting hydraulic cylinder with integral holding valve
- Boom elevation: −3° to 80°

Auxiliary Lifting Sheave

- Single 16.5 in (*41.9cm*) root diameter nylon sheave
- Easily removable wire rope guards
- Does not affect erection of the fly or use of the main head sheaves

Hook Blocks and Balls − Optional

- 27 ton (*25mt*) 1 sheave quick−reeve Hook Block with safety latch
- 60 ton (*55mt*) 3 sheave quick−reeve Hook Block with safety latch
- 90 ton (*82mt*) 5 sheave quick−reeve Hook Block with safety latch
- 10 ton (*9mt*) swivel Hook Ball with safety latch

Fly − Optional

- 10 ft (3.0*m*) one piece lattice fly, stowable, offsettable to 2°, 15°, 30°, and 45°. Maximum tip height is 160 ft (48.8*m*).
- 35−58 ft (*10.7−17.7m*) two piece bi−fold lattice fly, stowable, offsettable to 2°, 15°, 30°, and 45°. Maximum tip height is 208.7 ft (*63.6m*).
- 10−35−58 ft (3.0−10.7−17.7m) three piece bi−fold lattice fly, stowable, offsettable to 2°, 15°, 30°, and 45°. Maximum tip height is 208.7 ft (63.6m).

■ Operator's Cab and Controls

Environmental Cab − Fully enclosed, one person cab of tubular and sheet steel structure and acoustical insulation with formed plastic interior panels.

Equipped with:

- Air Conditioning − Integral with cab heating system utilizing the same ventilation outlets and automatic temperature control (ATC)
- Tinted and tempered glass windows
- Extra−large fixed front window with time delayed windshield wiper and washer
- Swing up roof window with windshield wiper and washer
- Sliding left side door with large fixed window
- Sliding right side window and pop−out rear window for ventilation
- Six way adjustable, cushioned seat with seat belt and storage compartments
- Diesel fired warm−water heater with ten air ducts for front windshield defroster and cab floor
- Adjustable sun screen
- Dome lights with red nighttime reading LED's
- Cup holder
- Fire extinguisher
- Two position travel swing lock
- AM/FM radio built in with NOAA weather radio and Bluetooth®
- Tilting cab (0° − 20°)

Engine Dependent Warm−Water Heater − Optional − With air ducts for front windshield defroster and cab floor

Courtesy of CraneMarket.com

Steering Column − Pedestal type with tilt and telescope functions for operator comfort. Column includes the following controls and indicators:
- Horn button
- Turn signal switch
- Driving light switch
- Transmission gear selector
- Transmission Direction Switches
- Travel park brake
- 2/4 wheel drive/range selector
- Hazard flasher

Armrest Controls − Two dual axis electronic joystick controllers or optional single axis electronic controllers for:
- Swing
- Boom hoist
- Main (rear) winch
- Auxiliary (front) winch
- Winch high/low speed switch(es)
- Warning horn button
- Swing park brake switch
- Engine throttle lock switch
- Engine set/resume switch
- Cab tilt (0° − 20°)
- Telescope override

Outrigger Controls − Hand held control box with linked cord gives the operator the freedom to view operation while setting the outriggers.

Foot Controls
- Boom telescope
- Swing brake
- Engine throttle
- Service brake

Upper Right Console − Controls and indicators for:
- Engine ignition
- Engine stop
- Function lockout and washer
- Horn
- Dome light with switch
- E−stop switch
- Front windshield wiper
- Radio
- DRI on/off selection
- Cab lights − optional
- HVAC controller
- Boom floodlights
- Rotating beacon/Strobe light
- Top hatch wiper washer
- Winch(es) disable
- Engine indicator gauge
- 360 swing lock − optional
- Upper frame lights − standard

Rear Right Side Panel
- 12V accessory outlet (10amp)
- USB charge port

Camera Display − Located on the right A−post with an adjustable mount
- Displays right side of upper
- Displays main and auxiliary winches
- Displays rear view

Diagnostic Center − Located on the right rear wall behind the seat.
- Engine diagnostic
- RCL CANBUS diagnostic
- Boom CANBUS diagnostic
- Outrigger CANBUS diagnostic

Fuse & Relay Panel − Located on the left rear wall behind the seat.

External RCL Light Bar − Optional − Visually informs the ground crew when crane is approaching maximum load capacity with a series of green, yellow, and red lights.

Link-Belt Pulse 2.0 – The Link-Belt in-house designed, total crane operating system that utilizes a 10 in touch screen color display with integrated RCL and engine data, advanced diagnostics and systems monitoring, Wi–Fi capable for remote software updates, operator customizable, and a readout and operator interface for the following systems:
- **Rated capacity limiter (RCL)** – LCD graphic audio – visual warning system integrated into the dash with anti – two block and function limiter. Operating data includes:
  - RCL controller USB diagnostic
  - Crane configuration
  - Boom angle
  - Boom head height
  - Boom length
  - Slew angle
  - Allowed load and % of allowed load
  - RCL light bar
  - Radius of load
  - Actual load
  - Wind speed
  - Highlighted unit of measurement on working screen
  - Telescope operation displayed in real time
  - Steer mode selector
  - Outrigger position sensing
  - Drum Rotation direction indication
  - Diagnostics
  - Operator settable alarms (include):
    - Maximum and minimum boom angles
    - Maximum tip height
    - Maximum boom length
    - Swing left/right positions
    - Operator defined area (imaginary plane)
- **Cab Instrumentation**
  - Tachometer
  - Engine water temperature
  - Fuel level
  - Hydraulic oil temperature
  - Stop engine
  - Check engine
  - Wait to start
  - Swing park brake light
  - Engine speed
  - Engine oil pressure
  - Battery voltage
  - Fuel rate (gal/hr)
  - Engine load
  - Engine Diagnostics
  - Diesel exhaust fluid (DEF) level (1)
  - Engine air filter high restriction light
  - Regeneration light (1)
  - Regeneration inhibit switch (1)
  - Regeneration initiate switch (1)
  - High exhaust temperature light (1)
  - Regeneration disabled light (1)

  (1) (Tier 4f / Stage IV engine only)
- **Telematics** – Cellular based data logging and monitoring system that provides:
  - Location and operational settings
  - Routine maintenance
  - Crane and engine monitoring
  - Diagnostic and fault codes

Internal RCL Light Bar − Visually informs the operator when crane is approaching maximum load capacity with a series of green, yellow, and red lights.

Integrated Third Wrap Indicator − Link-Belt Pulse 2.0 color display visually and audibly warns the operator when the wire rope is on the first/bottom layer and when the wire rope is down to the last three wraps.

Integrated Third Wrap Function Kickout − Link-Belt Pulse 2.0 color display visually and audibly warns the operator when the wire rope is on the first/bottom layer and provides a function kickout when the wire rope is down to the last three wraps.

Courtesy of CraneMarket.com

■ Swing

Motor/Planetary – Bi–directional hydraulic swing motor mounted to a planetary reducer for 360° continuous smooth swing at 1.9 rpm

Swing Park Brake – 360°, electric over hydraulic, (spring applied/hydraulic released) multi–disc brake mounted on the speed reducer. Operated by a switch in the operator's cab.

Swing Brake – 360°, foot operated, speed reducing system with disc brake hold feature

Swing Lock – Two–position swing lock (boom over front or rear) operated from the operator's cab

360° Positive Swing Lock – Optional – Meets New York City requirement

■ Electrical

Swing Alarm – Audio warning device signals when the upper is swinging.

Lights

- Two LED working lights on front of the cab
- Two amber strobe lights at rear of the upper frame
- LED Boom floodlight – Dual
- LED Frame work lights – right front, left rear, and work platform
- One LED working light on top of cab – optional
- LED Boom floodlight – High intensity remote controlled – optional

■ Load Hoist System

Load Hoist Performance

Main (Rear) and Auxiliary (Front) Winches – 3/4 in (*19mm*) Rope										
	Maximum Line Pull		Normal Line Speed		High Line Speed		Layer		Total	
Layer	lb	*kN*	ft/min	*m/min*	ft/min	*m/min*	ft	*m*	ft	*m*
1	18,603	*82.8*	168	*51.2*	359	*109.4*	114	*34.7*	114	*34.7*
2	17,103	*76.08*	183	*55.8*	391	*119.2*	124	*37.8*	238	*72.5*
3	15,827	*70.4*	198	*60.4*	422	*128.6*	134	*40.8*	372	*113.4*
4	14,728	*65.51*	212	*64.6*	454	*138.4*	144	*43.9*	516	*157.3*
5	13,772	*61.26*	227	*69.2*	485	*147.8*	154	*46.9*	670	*204.2*

Wire Rope Application		Diameter		Type	Maximum Permissible Load	
Main (Rear) Winch	Standard	3/4	*19*	37x7 Category 1, E.E.I.P.S., right lang lay (Type KC) Galvanized	16,000	*7 257.5*
	Optional	3/4	*19*	35x7 Category 1, E.E.I.P.S., right lang lay (Type CC)	17,160	*7 783.6*
	Optional	3/4	*19*	34x7 Category 1, E.E.I.P.S., right lang lay (Type YB)	16,000	*7 257.5*
Auxiliary (Front) Winch	Standard	3/4	*19*	37x7 Category 1, E.E.I.P.S., right lang lay (Type KC) Galvanized	16,000	*7 257.5*
	Optional	3/4	*19*	35x7 Category 1, E.E.I.P.S., right lang lay (Type CC)	17,160	*7 783.6*
	Optional	3/4	*19*	34x7 Category 1, E.E.I.P.S., right lang lay (Type YB)	16,000	*7 257.5*

Main and Auxiliary Winches

- Axial piston, full and half displacement (2–speed) motors driven through planetary reduction unit for positive control under all load conditions
- Grooved lagging
- Power up/down mode of operation
- Drum rotation indicator(s)
- Drum diameter: 16 in (*40.6cm*)
- Rope length:
  - Front: 500 ft (*152.4m*)
  - Rear: 600 ft (*182.9m*)
- Maximum rope storage: 670 ft (*204.2m*)
- Terminator style socket and wedge
- Encoders for reading rope payout
- Hoist drum cable followers

■ Hydraulic System

Counterbalance Valves – All hoist motors, boom extend cylinders, and boom hoist cylinders are equipped with counterbalance valves to control load lowering. This prevents accidental load drop when hydraulic power is suddenly reduced.

■ Counterweight

Total of 14,500 lb (*6.6t*) counterweight pinned to the upper with capacities for:

- 0 lb (*0t*) counterweight*
- 14,500 lb (*6.6t*) counterweight

* Travel speed limited to 5 mph.

Hydraulic counterweight removal – optional – activated by a hand–held controller with enough cable to access the pins on each side of the counterweights.

Courtesy of CraneMarket.com

Carrier

■ General

- 10 ft 7 in (*3.22m*) wide
- 14 ft 7 in (*4.45m*) wheelbase (centerline of first axle to centerline of second axle)

Frame — Box—type, torsion resistant, welded construction made of high tensile steel. Equipped with front and rear towing and tie—down lugs, tow connections, and access ladders.

- Six points of access
- Flat deck
- Three Lockable storage boxes

Pintle Hooks — Optional — Front and rear available

■ Outriggers

Boxes — Two double box, front and rear welded to carrier frame

Beams and Jacks — Four single stage beams that are hydraulically controlled from the operator's cab with integral check valves

Variable Confined Lifting Capacities (V—CALC™) — Variable confined area lifting capabilities that are incorporated directly into the Pulse 2.0 display allowing multiple outrigger configurations with live on screen working radii, utilizing 360° charts, and swing arrest

Pontoons — Four lightweight, quick release, 24 in (*61cm*) steel diameter pontoons with contact area of 452 in^2 (*2 916cm*^{2}) can be stored for road travel in storage racks on the carrier

Main Jack Reaction — 93,000 lb (*42 184kg*) force and 206 psi (*1 420kPa*) maximum ground bearing pressure

■ Steering and Axles

Steering — Four independent modes consisting of two wheel front, two wheel rear, four wheel, and crab. Each mode is controlled from the steering wheel and is selected by a switch in the operator's cab.

Emergency Steer System — Optional

Drive — Two modes: 4 x 2 and 4 x 4 for off highway travel

Axle 1 — Steered, non—driven for 4 x 2 and steered, driven for 4 x 4

Axle 2 — Steered, driven

■ Suspension

Front — Rigid mount to the carrier frame

Rear — The rear axle is suspended on the oscillation cylinders with motion of the axle controlled by a four bar linkage system. The oscillation cylinders lockout when the upper structure rotates 2.5° past centerline.

- Hydro—gas rear suspension — optional

■ Tires and Wheels

Front and Rear — Four (single) 26.5 x 25—32 ply rating, earthmover type tires on steel disc wheels

- Spare tires and wheels — optional

■ Brakes

Service — Full hydraulic, dual circuit, disc type brakes on all wheel ends

Parking/Emergency — Spring applied type, acting on front axle

■ Electrical

Two batteries provide 24 volt starting and operation

Lights

- All lights are LED.
- Front lighting includes two main headlights, outrigger lights, and two parking/directional indicators.
- Side lighting includes two parking/directional indicators per side.
- Rear lighting includes two parking/directional indicators, two parking/brake lights, and two reversing lights.
- Other equipment includes hazard/warning system, cab light, instrument panel light, and signal horn.

■ Engine

Specification	Cummins QSB	
Numbers of Cylinders	6	6
Cycle	4	4
Emissions Compliance Level:	Tier 4f/Stage IV(1)	Tier 3/Stage IIIA(2)
Bore and Stroke: inch (*mm*)	4.21 x 4.88 (*107 x 124*)	4.21 x 4.88 (*107 x 124*)
Piston Displacement: in^3 (*L*)	408 (*6.7*)	408 (*6.7*)
Max. Brake Horse-power: hp (*kW*)	270 (*201*) @ 2,000 rpm 260 (*194*) @ 2,200 rpm	270 (*201*) @ 2,000 rpm 260 (*194*) @ 2,200 rpm
Peak Torque: ft lb (*Nm*)	730 (*990*) @ 1,500 rpm	730 (*990*) @ 1,500 rpm
Electric/starting systems: volts	24/24	24/24
Alternator: amps	140	140
Crankcase Capacity: qt (*L*)	15 (*14.2*)	15 (*14.2*)

- Water/fuel separator w/ heater and water in fuel (WIF) sensor
- 120—volt block heater — Tier 4f / Stage IV
- 220—volt block heater — Tier 3 / Stage IIIA
- Grid heater — 112 amp
- Mechanically driven, variable speed, engine controlled, viscous fan clutch
- (1) Can only be sold and/or operated where Tier 4f and Stage IV off—highway emission standards are accepted.
- (2) Can only be sold and/or operated where Tier 3 and Stage IIIA off—highway emission standards are accepted.

■ Transmission

Powershift — Three speed with high/low range for 6 forward and 6 reverse gears. Front axle disconnect for two or four wheel drive. Front axle disconnects in high range.

■ Fuel Tank

- One 75 gallon (*283.9L*) capacity fuel tank
- One 5 gal (*18.9L*) capacity diesel exhaust fluid (DEF) tank (1)
- (1)(Tier 4f / Stage IV engine only)

Courtesy of CraneMarket.com

■ Hydraulic System

All functions are hydraulically powered allowing positive precise control with independent or simultaneous operation of all functions.

Main Pumps

- One variable displacement, load sense, piston pump with anti–stall for the front/rear winches, boom hoist, and telescope circuits
- One two section fixed displacement gear pump for the power steering/swing and for the service brakes/outriggers/oscillation/counterweights
- One single section gear pump for the hydraulic oil cooler fan drive
- Combined pump capacity of 117 gpm (*442.9Lpm*)

Hydraulic Reservoir – 173 gal (*654.9L*) capacity equipped with sight level gauge. Diffusers built in for deaeration.

Filtration – One 5 micron, full flow line filter in the control circuit. All oil is filtered prior to return to reservoir. Accessible for easy filter replacement.

Hydraulic Oil Coolers – One carrier mounted cooler removes heat from the hydraulic oil. Remote mounted on right side of the carrier.

■ Pump Drive

All pumps are mounted on the transmission and mechanically driven by the diesel engine.

■ Maximum Speed

20 mph (*32 km/h*)

■ Paint

Entire machine is pre-painted and oven baked with Highsolid Paint (2 part epoxy/polyester) and/or (2 part epoxy primer/2 part polyurethane top coat). Standard Link-Belt Red, Link-Belt Gray, and Gloss Black colors apply.

■ Additional Equipment Options

- Spark arrestor – optional
- Engine air intake shutoff valve – optional

■ Gradeability

Counterweight	Ascending		Descending		Side	
	Degrees	% Grade	Degrees	% Grade	Degrees	% Grade
0	16.0	29%	7.0	12%	5.0	9%
14,500 lb (*6.6t*)	14.0	25%	14.0	25%	5.0	9%

Axle Loads & Transport View

Base Machine Includes: two winches with cable followers, standard wire rope, 14,500 lb counterweight, floodlights, auxiliary lifting sheave, 35–58 ft offset fly, 60 T Hook Block, and 10 T Hook Ball		Gross Vehicle Weight		Front Axles		Rear Axles	
		lb	kg	lb	kg	lb	kg
	Tier 4f / Stage IV	99,505	45 135	53,746	24 379	45,759	20 756
	Tier 3 / Stage	99,369	45 073	53,626	24 324	45,743	20 749
Remove	Full 14,500 lb counterweight	–14,519	–6 586	5,237	2 375	–19,756	–8 961
	35–58 ft Offset Fly	–2,351	–1 066	–4,124	–1 871	1,333	605
	Auxiliary Lifting Sheave	–96	–44	–260	–118	164	74
	60T Hook Block	–1,150	–522	–2,990	–1 356	1,840	835
	10T Hook Ball	–573	–260	–1,490	–676	917	416
Substitute	10–35–58 ft Offset Fly	440	200	–456	–207	16	7

Tire	Maximum Allowable Axle Load @ 20 mph (*32.2km/h*)
26.5 x 25 (32–PR)	55,200 lb (*25 038kg*)

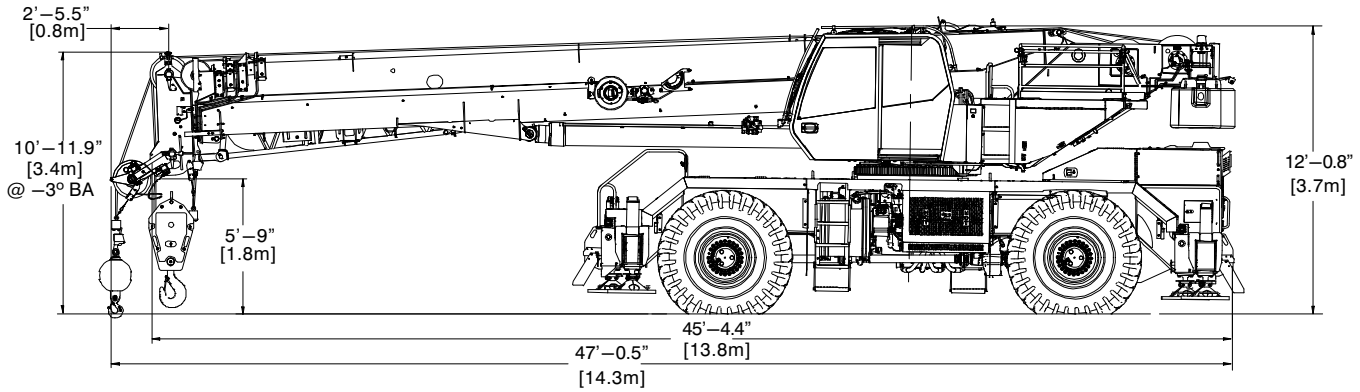

Courtesy of CraneMarket.com

General Dimensions

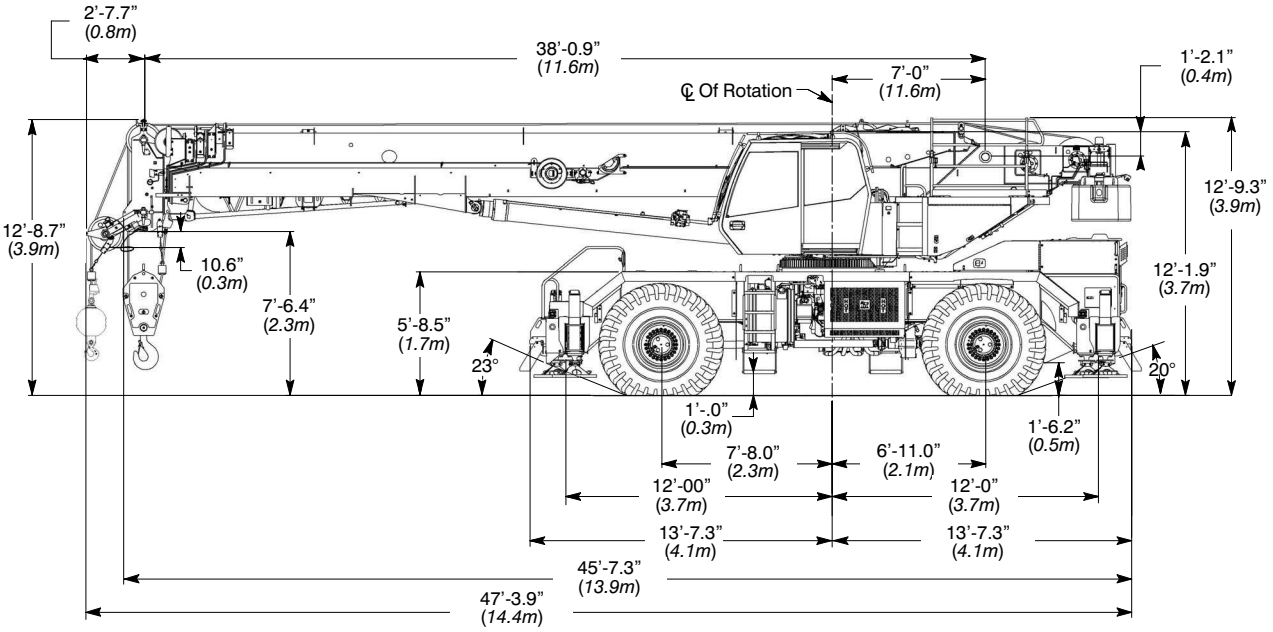

Turning Radius — Front Wheel (4x2) Steering	English	*Metric*
Wall to wall over carrier	46' 6"	*14.2m*
Wall to wall over boom attachment	56' 0"	*17.1m*
Curb to curb	44' 9"	*13.6m*
Centerline of tire	43' 6"	*13.3m*

Turning Radius — All Wheel (4x4) Steering	English	*Metric*
Wall to wall over carrier	27' 1"	*8.2m*
Wall to wall over boom attachment	38' 3"	*11.7m*
Curb to curb	24' 11"	*7.6m*
Centerline of tire	23' 9"	*7.2m*

Tail Swing	English	*Metric*
With counterweight	13' 8"	*4.2m*
Without counterweight	13' 7"	*4.1m*

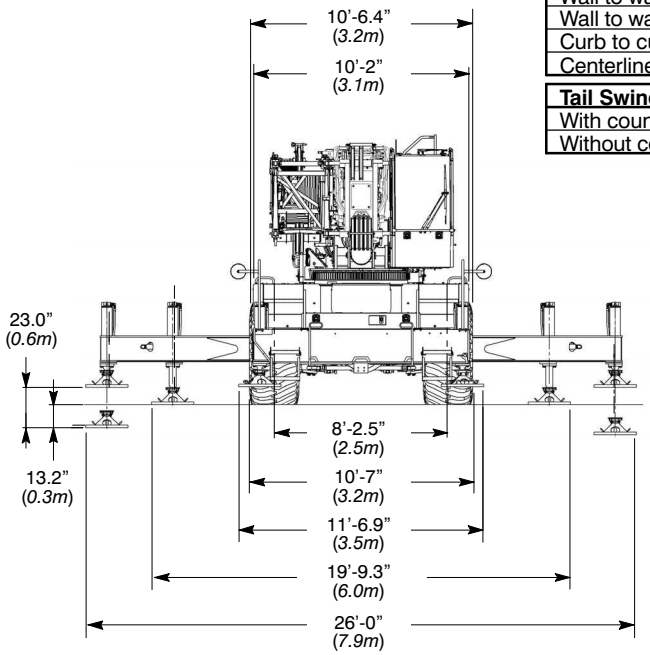

Not To Scale

Courtesy of CraneMarket.com

Auxiliary Lifting Sheave

Auxiliary Lifting Sheave ❶

Length	34.4 in	*(0.87m)*
Width	19.59 in	*(0.50m)*
Height	22.53 in	*(0.57m)*
Weight	96 lb	*(44kg)*

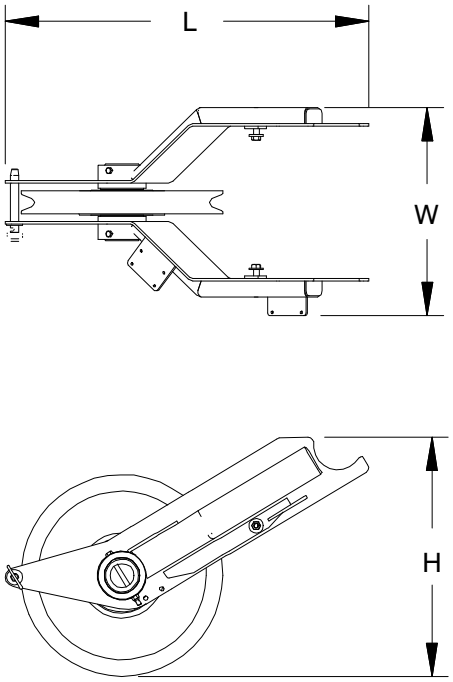

Fly

35 ft *(10.7m)* One Piece Lattice Fly (Base Fly) * ❶

Length	35.7 ft	*(10.88m)*
Width	36 in	*(0.91m)*
Height	53 in	*(1.35m)*
Weight	1,595 lb	*(723.48kg)*

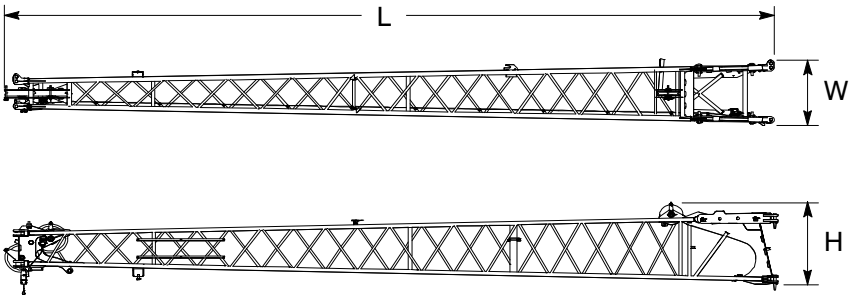

23 ft *(7.01m)* Lattice Fly Tip (Addition To Base Fly For 35—58 ft *(10.7—17.7m)* Bi—fold Fly) * ❶

Length	24 ft	*(7.32m)*
Width	20 in	*(0.51m)*
Height	27 in	*(0.68m)*
Weight	703.5 lb	*(319.1kg)*

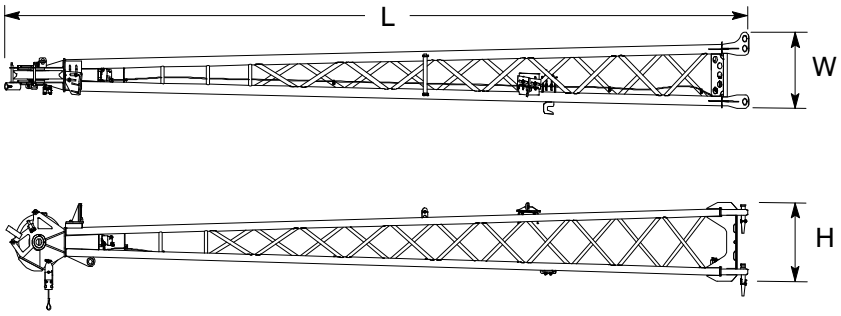

Number inside black circle "❶" = # of components
* — Optional equipment

Courtesy of CraneMarket.com

10 ft *(3m)* One Piece Lattice (Base Fly) * ❶

Length	10.3 ft	*(3.14m)*
Width	40 in	*(1.01m)*
Height	65 in	*(1.65m)*
Weight	1065 lb	*(483.08kg)*

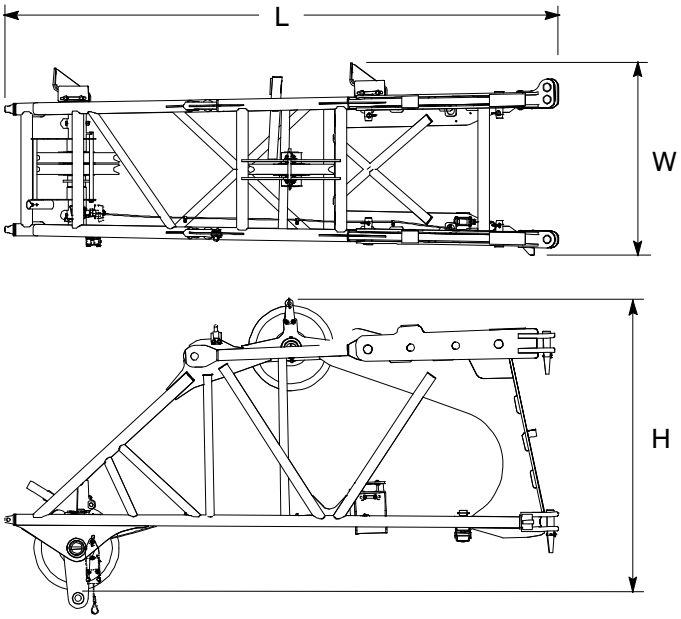

Number inside black circle "❶" = # of components
* — Optional equipment

23 ft *(7.01m)* Lattice Fly Center (Addition to Base Fly For 10—35 ft *(3—10.7m)* Bi—fold Fly) * ❶

Length	29.4 ft	*(8.96m)*
Width	35 in	*(0.89m)*
Height	41 in	*(1.04m)*
Weight	989 lb	*(448.6kg)*

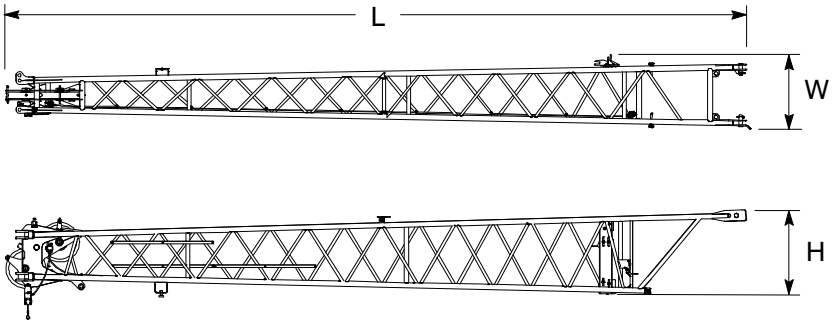

Counterweights

"A" Counterweight ❶

Length	32.41 in	*(0.82m)*
Width	8 ft 4 in	*(2.54m)*
Height	24.80 in	*(0.63m)*
Weight	14,492 lb	*(6 573kg)*

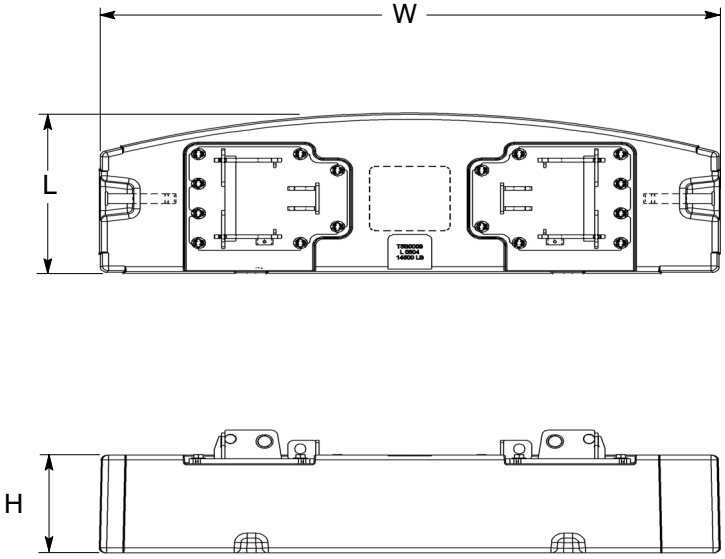

Number inside black circle "❶" = # of components
* — Optional equipment

Courtesy of CraneMarket.com

Hook Balls

10.0 Ton *(9mt)* Swivel Hook Ball* ❶

Width	16.73 in	*(0.43m)*
Height	34.92 in	*(0.89m)*
Weight	583 lb	*(265kg)*

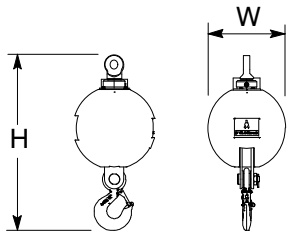

Hook Blocks

27.5 Ton *(25mt)* 1—Sheave Hook Block* ❶

Width	13.46 in	*(0.34m)*
Height	52.87 in	*(1.34m)*
Weight	800 lb	*(362.9kg)*

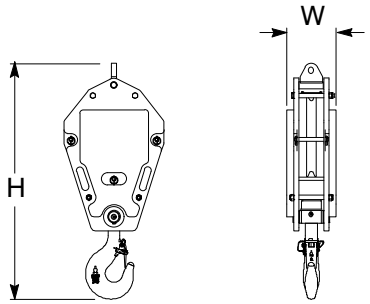

60 Ton *(55mt)* 3—Sheave Hook Block* ❶

Width	13.46 in	*(0.34m)*
Height	58.16 in	*(1.48m)*
Weight	1,150 lb	*(521.6kg)*

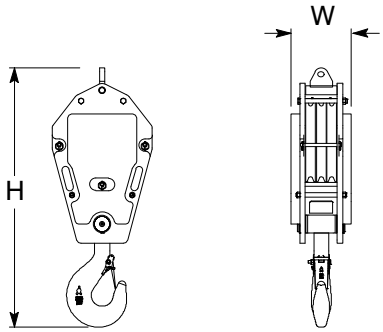

90 Ton *(82mt)* 5—Sheave Hook Block* ❶

Width	17.40 in	*(0.44m)*
Height	60.62 in	*(1.54m)*
Weight	1,750 lb	*(793.8kg)*

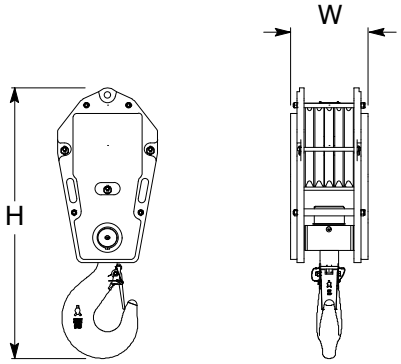

Number inside black circle "❶" = # of components
* — Optional equipment

Courtesy of CraneMarket.com

Working Range Diagram

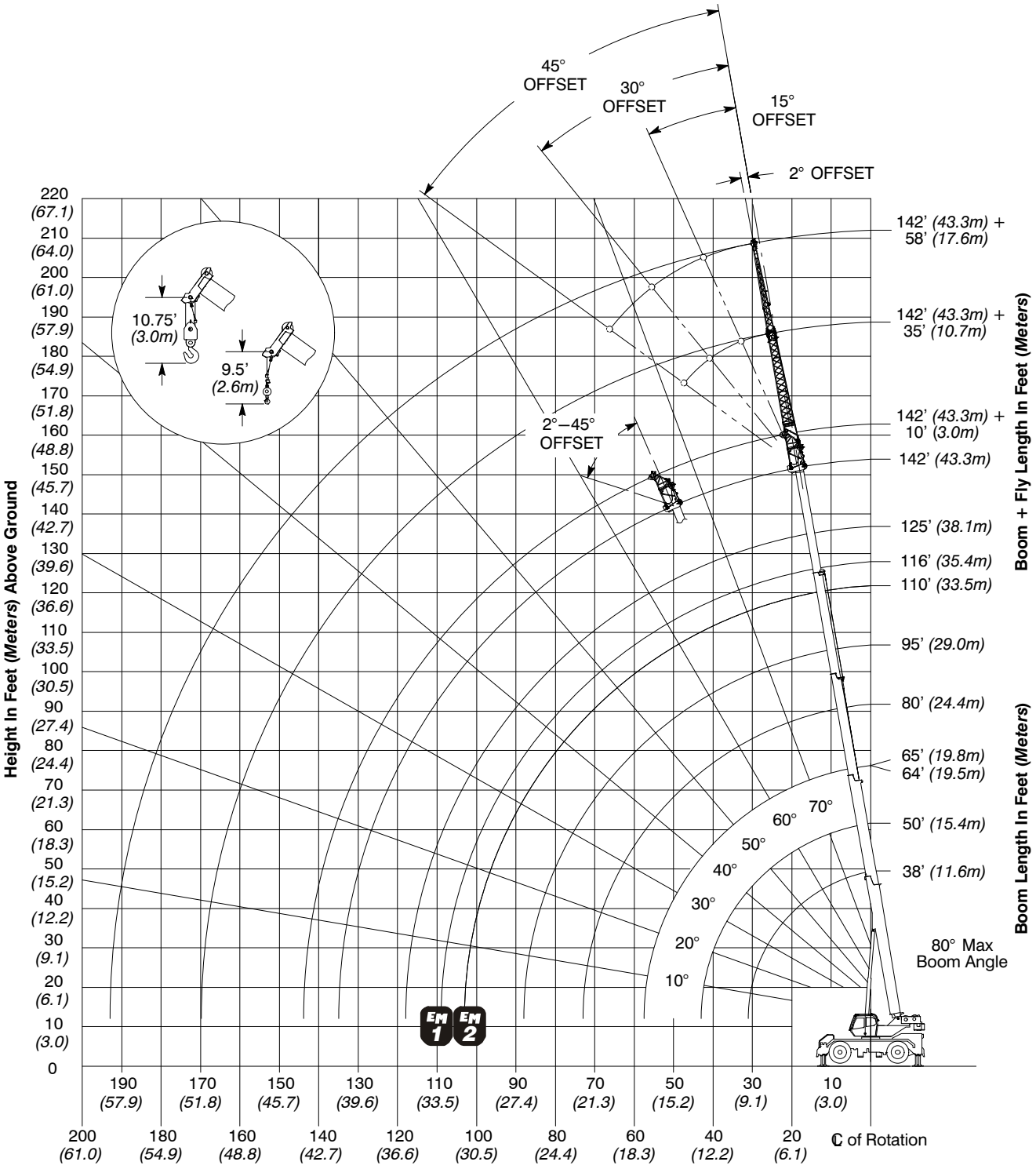

Courtesy of CraneMarket.com

Boom Extend Modes

	Boom Length		Telescope Length			
	ft	*m*	T4	T3	T2	T1
*	38	*11.58*				
	50	*15.24*	15%	15%	15%	
*	65	*19.81*	35%	35%	35%	
	80	*24.38*	54%	54%	54%	
**	90	*27.43*	67%	67%	67%	
	95	*28.96*	73%	73%	73%	
*	116	*35.36*	100%	100%	100%	
	125	*38.10*	100%	100%	100%	35%
*	142	*43.28*	100%	100%	100%	100%

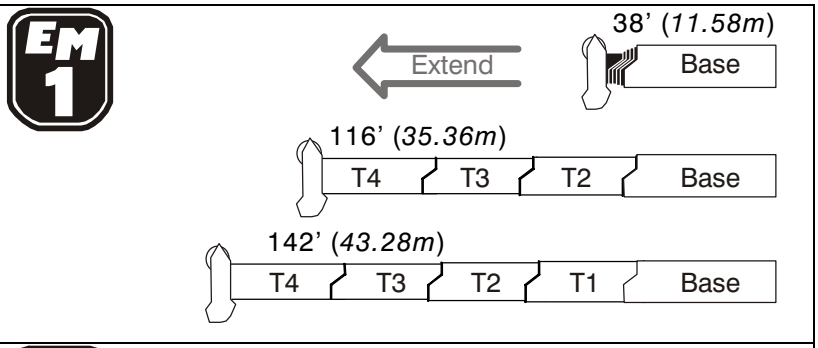

	Boom Length		Telescope Length			
	ft	*m*	T4	T3	T2	T1
*	38	*11.58*				
	50	*15.24*				46%
*	64	*19.51*				100%
	80	*24.38*	21%	21%	21%	100%
**	85	*25.91*	27%	27%	27%	100%
	95	*28.96*	40%	40%	40%	100%
*	110	*33.53*	59%	59%	59%	100%
	125	*38.10*	78%	78%	78%	100%
*	142	*43.28*	100%	100%	100%	100%

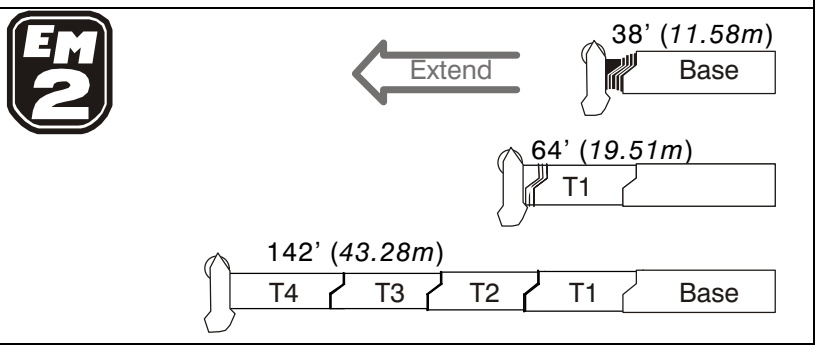

* Denotes boom lengths charted with 35' or 58' fly capacities only.

Courtesy of CraneMarket.com

Main Boom Lift Capacity Charts — Imperial

14,500lb Counterweight — Fully Extended Outriggers — 360° Rotation
(All Capacities Are Listed In Pounds)

Radius (ft)	Boom Length (ft)								Radius (ft)
	38.0	50.0	64.0/65.0	80.0	95.0	110.0/116.0	125.0	142.0	
8	150,000**								8
9	140,000								9
10	131,300	96,700	61,000						10
12	117,400	96,700	61,000	45,000					12
15	100,800	96,700	61,000	45,000	45,000				15
20	78,400	77,400	61,000	45,000	45,000	40,000			20
25	60,600	59,800	57,600	45,000	45,000	40,000	28,200		25
30	48,000	46,600	45,300	43,900	39,600	36,000	28,200	20,200	30
35		37,600	39,000	37,800	35,000	32,000	27,800	20,200	35
40		29,200	30,700	31,400	28,200	28,700	25,500	20,200	40
45			24,800	25,500	22,500	23,300	23,500	20,100	45
50			20,500	21,200	19,500	19,000	19,600	18,500	50
55			17,100	17,800	17,900	15,700	16,300	16,800	55
60				15,200	15,700	13,600*	14,500	14,300	60
65				13,100	13,500	12,600*	13,300	12,200	65
70				11,300	11,800	11,600*	11,500	10,400	70
75					10,300	10,600*	10,000	8,900	75
80					8,900	9,400*	8,700	7,700	80
85					7,800	8,200*	7,600	6,600	85
90						7,300*	6,600	5,600	90
95						6,400*	5,800	4,800	95
100						5,700*	5,100	4,100	100
105						5,000*	4,400	3,400	105
110							3,800	2,800	110
115							3,200	2,300	115
120								1,800	120
125								1,400	125

***Boom Mode EM1, 116.0 ft**
****Over Front Only**

This information is not for crane operation. Operator must refer to the in−cab information for crane operation. Rated lifting capacities shown on fully extended outriggers do not exceed 85% of the tipping loads and on tires do not exceed 75% of the tipping loads.

Courtesy of CraneMarket.com

Fly Attachment Lift Capacity Charts − Optional

14,500lb Counterweight − Fully Extended Outriggers − 360° Rotation
(All Capacities Are Listed In Pounds)

Radius (ft)	142 ft Main Boom Length								Radius (ft)
	35 ft Manual Offset Fly				58 ft Manual Offset Fly				
	0°	15°	30°	45°	0°	15°	30°	45°	
40	10,900								**40**
45	10,900				7,200				**45**
50	10,900	11,300			7,200				**50**
55	10,900	11,300			7,200				**55**
60	10,900	11,300	11,400		7,200				**60**
65	10,900	11,300	11,200	10,100	7,200	7,700			**65**
70	10,900	11,100	10,800	10,000	7,200	7,500			**70**
75	9,600	10,400	10,100	9,800	7,200	7,400			**75**
80	8,300	9,100	9,500	9,400	7,200	7,200	6,300		**80**
85	7,200	7,900	8,500	8,800	7,200	7,000	6,200	5,500	**85**
90	6,200	6,900	7,400	7,900	6,800	6,900	6,100	5,400	**90**
95	5,300	5,900	6,500	6,800	5,900	6,800	5,900	5,300	**95**
100	4,600	5,100	5,600	5,900	5,100	6,100	5,800	5,200	**100**
105	3,900	4,400	4,800	5,100	4,400	5,300	5,700	5,100	**105**
110	3,300	3,700	4,100	4,400	3,800	4,600	5,300	5,000	**110**
115	2,700	3,200	3,500	3,700	3,300	4,000	4,600	5,000	**115**
120	2,200	2,600	2,900	3,100	2,700	3,400	4,000	4,500	**120**
125	1,800	2,100	2,400	2,500	2,300	2,900	3,500	3,900	**125**
130	1,400	1,700	1,900	2,000	1,900	2,500	3,000	3,300	**130**
135	1,000	1,300	1,500	1,600	1,500	2,000	2,500	2,800	**135**
140		900	1,100		1,100	1,600	2,000	2,300	**140**
145						1,300	1,600	1,800	**145**
150						900	1,200	1,400	**150**
155							900	1,000	**155**

This information is not for crane operation. Operator must refer to the in−cab information for crane operation. Rated lifting capacities shown on fully extended outriggers do not exceed 85% of the tipping loads and on tires do not exceed 75% of the tipping loads.

Courtesy of CraneMarket.com

Main Boom Lift Capacity Charts — On Tires — 75% — Imperial

14,500lb Counterweight — On Tires — Stationary — Boom Centered Over The Front
(All Capacities Are Listed In Pounds)

Radius (ft)	Boom Length (ft)					Radius (ft)
	38	50	65	80	95	
10	68,400					10
12	60,400	46,100				12
15	51,200	46,100	35,400			15
20	40,300	42,000	35,400	27,000		20
25	31,900	34,000	35,400	27,000		25
30	23,000	25,200	26,400	27,000	20,800	30
35		18,900	20,300	20,900	20,800	35
40		14,600	15,900	16,600	17,000	40
45			12,800	13,600	14,000	45
50			10,400	11,100	11,600	50
55			8,400	9,200	9,700	55
60				7,600	8,100	60
65				6,300	6,800	65
70				5,300	5,700	70
75					4,800	75
80					4,000	80
85					3,300	85

14,500lb Counterweight — On Tires — Pick & Carry (Creep) — Boom Centered Over Front
(All Capacities Are Listed In Pounds)

Radius (ft)	Boom Length (ft)					Radius (ft)
	38	50	65	80	95	
10	66,900					10
12	58,600	46,100				12
15	48,700	46,100	35,400			15
20	37,200	38,800	35,400	27,000		20
25	29,300	30,900	32,000	27,000		25
30	23,000	25,100	26,300	27,000	20,800	30
35		18,900	20,300	20,900	20,800	35
40		14,900	15,900	16,600	17,000	40
45			12,800	13,600	14,000	45
50			10,400	11,100	11,600	50
55			8,400	9,200	9,700	55
60				7,600	8,100	60
65				6,300	6,800	65
70				5,300	5,700	70
75					4,800	75
80					4,000	80
85					3,300	85

This information is not for crane operation. Operator must refer to the in−cab information for crane operation. Rated lifting capacities shown on fully extended outriggers do not exceed 85% of the tipping loads and on tires do not exceed 75% of the tipping loads.

Courtesy of CraneMarket.com

14,500lb Counterweight — On Tires — Pick & Carry (2.5mph) — Boom Centered Over Front
(All Capacities Are Listed In Pounds)

Radius (ft)	Boom Length (ft)					Radius (ft)
	38	50	64/65	80	95	
10	41,000					10
12	35,400	36,700				12
15	28,800	30,200	31,200			15
20	20,900	22,500	23,500	24,200		20
25	15,500	17,100	18,300	18,900		25
30	11,500	13,300	14,400	15,200	15,600	30
35		10,300	11,500	12,200	12,700	35
40		7,900	9,200	9,900	10,400	40
45			7,300	8,000	8,500	45
50			5,700	6,500	7,000	50
55			4,400	5,200	5,700	55
60				4,100	4,600	60
65				3,100	3,600	65
70				2,300	2,800	70
75					2,100	75
80					1,400	80

14,500lb Counterweight — On Tires — Stationary — 360° Rotation
(All Capacities Are Listed In Pounds)

Radius (ft)	Boom Length (ft)					Radius (ft)
	38	50	65	80	95	
12	42,100					12
15	30,000	31,900				15
20	17,800	19,700				20
25	11,300	13,100	14,500			25
30	7,100	9,000	10,200	11,000		30
35		6,200	7,400	8,100	8,600	35
40		4,100	5,300	6,000	6,500	40
45			3,700	4,400	4,900	45
50			2,500	3,100	3,600	50
55				2,100	2,600	55
60				1,300	1,800	60
65					1,100	65

This information is not for crane operation. Operator must refer to the in−cab information for crane operation. Rated lifting capacities shown on fully extended outriggers do not exceed 85% of the tipping loads and on tires do not exceed 75% of the tipping loads.

Courtesy of CraneMarket.com

Main Boom Lift Capacity Charts — 75% — Metric

6.6t Counterweight (14,500 lbs) — Fully Extended Outriggers — 360° Rotation
(All Capacities Are Listed In Kilograms)

Radius (m)	Boom Length (m)									Radius (m)
	11.58	15.24	19.51—19.81	24.38	28.96	33.53	35.36	38.1	43.28	
2.5	70 000*									**2.5**
3.0	63 500	43 850	27 650							**3.0**
3.5	58 050	43 850	27 650							**3.5**
4.0	53 250	43 850	27 650	20 450						**4.0**
4.5	49 100	43 850	27 650	20 450						**4.5**
5.0	45 500	43 850	27 650	20 450	20 400					**5.0**
6.0	38 600	38 150	27 650	20 450	20 400	18 100				**6.0**
7.0	32 200	31 800	27 650	20 450	20 400	18 100				**7.0**
8.0	27 400	27 050	25 150	20 450	19 850	17 950	12 050	12 850		**8.0**
9.0	22 900	22 250	21 700	20 150	18 200	16 550	11 150	12 850	9 150	**9.0**
10.0		19 650	20 350	18 500	16 750	15 250	10 350	12 850	9 150	**10.0**
12.0		13 900	14 550	14 950	13 500	13 200	9 000	11 700	9 150	**12.0**
14.0			11 050	11 400	10 050	10 400	7 950	10 500	9 000	**14.0**
16.0			8 650	9 000	8 450	8 050	7 050	8 350	8 100	**16.0**
18.0				7 250	7 450	6 400	6 300	6 700	6 900	**18.0**
20.0				5 950	6 200	5 100	5 650	6 050	5 600	**20.0**
22.0				4 900	5 150	4 100	5 100	5 050	4 550	**22.0**
24.0					4 300	3 300	4 500	4 200	3 750	**24.0**
26.0					3 650	2 650	3 850	3 550	3 100	**26.0**
28.0						2 100	3 250	2 950	2 550	**28.0**
30.0						1 600	2 750	2 500	2 050	**30.0**
32.0							2,350	2 100	1 650	**32.0**
34.0								1 700	1 300	**34.0**
36.0									1 000	**36.0**
38.0									700	**38.0**

* Over Front Only

This information is not for crane operation. Operator must refer to the in—cab information for crane operation. Rated lifting capacities shown on fully extended outriggers do not exceed 75% of the tipping loads and on tires do not exceed 65% of the tipping loads.

Courtesy of CraneMarket.com

Fly Attachment Lift Capacity Charts — 75% Metric — Optional

6.6t Counterweight (14,500lbs) — Fully Extended Outriggers — 360° Rotation
(All Capacities Are Listed In Kilograms)

43.28m Main Boom Length

Radius (m)	10.7 m Fly Length				17.7 m Fly Length				Radius (m)
	0°	15°	30°	45°	0°	15°	30°	45°	
12.0	4 950								**12.0**
14.0	4 950				3 300				**14.0**
16.0	4 950	5 150			3 300				**16.0**
18.0	4 950	5 150	5 200		3 300				**18.0**
20.0	4 950	5 150	5 100	4 600	3 300	3 450			**20.0**
22.0	4 750	4 900	4 750	4 500	3 300	3 350			**22.0**
24.0	3 900	4 300	4 350	4 300	3 300	3 300	2 850		**24.0**
26.0	3 200	3 550	3 850	3 950	3 300	3 200	2 800	2 500	**26.0**
28.0	2 650	2 950	3 200	3 400	2 900	3 100	2 700	2 450	**28.0**
30.0	2 150	2 450	2 650	2 800	2 450	2 850	2 650	2 350	**30.0**
32.0	1 750	2 000	2 200	2 300	2 000	2 400	2 550	2 300	**32.0**
34.0	1 400	1 600	1 800	1 900	1 650	2 000	2 300	2 300	**34.0**
36.0	1 100	1 250	1 400	1 500	1 350	1 650	1 900	2 150	**36.0**
38.0	800	1 000	1 100	1 150	1 050	1 350	1 600	1 750	**38.0**
40.0	550	700	800	850	800	1 050	1 300	1 450	**40.0**
42.0		500	550		550	800	1 000	1 150	**42.0**
44.0						600	750	850	**44.0**
46.0						400	550	600	**46.0**

This information is not for crane operation. Operator must refer to the in−cab information for crane operation. Rated lifting capacities shown on fully extended outriggers do not exceed 75% of the tipping loads and on tires do not exceed 65% of the tipping loads.

Courtesy of CraneMarket.com

Main Boom Lift Capacity Charts — On Tires — 75% — Metric

6.6t Counterweight (14,500lbs) — On Tires — Stationary — Boom Centered Over Front Between Tire Tracks
(All Capacities Are Listed In Kilograms)

Radius (m)	Boom Length (m)					Radius (m)
	11.58	15.24	19.81	24.38	28.96	
3.0	31 350					3.0
3.5	28 250	20 850				3.5
4.0	25 700	20 850				4.0
4.5	23 500	20 850	16 050			4.5
5.0	21 650	20 850	16 050			5.0
6.0	18 550	19 300	16 050	12 200		6.0
7.0	16 000	16 850	16 050	12 200		7.0
8.0	13 500	14 500	15 050	12 200		8.0
9.0	10 750	11 750	12 300	12 200	9 400	9.0
10.0		9 700	10 300	10 600	9 400	10.0
12.0		6 850	7 450	7 750	7 950	12.0
14.0			5 600	5 950	6 100	14.0
16.0			4 250	4 600	4 800	16.0
18.0				3 600	3 800	18.0
20.0				2 800	3 000	20.0
22.0				2 200	2 400	22.0
24.0					1 900	24.0
26.0					1 500	26.0

6.6t Counterweight (14,500lbs) — On Tires —Pick & Carry (Creep) Boom Centered Over Front
(All Capacities Are Listed In Kilograms)

Radius (m)	Boom Length (m)					Radius (m)
	11.58	15.24	19.81	24.38	28.96	
3.0	30 700					3.0
3.5	27 450	20 850				3.5
4.0	24 750	20 850				4.0
4.5	22 400	20 850	16 050			4.5
5.0	20 400	20 850	16 050			5.0
6.0	17 150	17 850	16 050	12 200		6.0
7.0	14 600	15 300	15 800	12 200		7.0
8.0	12 550	13 300	13 800	12 200		8.0
9.0	10 750	11 600	12 150	12 200	9 400	9.0
10.0		9 700	10 300	10 600	9 400	10.0
12.0		6 850	7 450	7 750	7 950	12.0
14.0			5 600	5 950	6 100	14.0
16.0			4 250	4 600	4 800	16.0
18.0				3 600	3 800	18.0
20.0				2 800	3 000	20.0
22.0				2 200	2 400	22.0
24.0					1 900	24.0
26.0					1 500	26.0

This information is not for crane operation. Operator must refer to the in—cab information for crane operation. Rated lifting capacities shown on fully extended outriggers do not exceed 75% of the tipping loads and on tires do not exceed 65% of the tipping loads.

Courtesy of CraneMarket.com

6.6t Counterweight (14,500lbs) — On Tires — Pick And Carry — 4 km/h (2.5mph) Boom Centered Over Front
(All Capacities Are Listed In Kilograms)

Radius (m)	Boom Length (m)					Radius (m)
	11.58	15.24	19.81	24.38	28.96	
3.0	18 850					**3.0**
3.5	16 650	17 250				**3.5**
4.0	14 800	15 400				**4.0**
4.5	13 250	13 900	14 350			**4.5**
5.0	11 900	12 550	13 000			**5.0**
6.0	9 650	10 350	10 850	11 150		**6.0**
7.0	7 900	8 650	9 150	9 450		**7.0**
8.0	6 550	7 250	7 800	8 100		**8.0**
9.0	5 350	6 150	6 700	7 000	7 150	**9.0**
10.0		5 200	5 750	6 100	6 300	**10.0**
12.0		3 700	4 250	4 600	4 800	**12.0**
14.0			3 150	3 500	3 700	**14.0**
16.0			2 300	2 600	2 850	**16.0**
18.0				1 950	2 150	**18.0**
20.0				1 350	1 600	**20.0**
22.0				900	1 100	**22.0**
24.0					700	**24.0**

6.6t Counterweight (14,500lbs) — On Tires — Stationary — 360° Rotation
(All Capacities Are Listed In Kilograms)

Radius (m)	Boom Length (m)					Radius (m)
	11.58	15.24	19.81	24.38	28.96	
3.5	19 050					**3.5**
4.0	17 150					**4.0**
4.5	14 000					**4.5**
5.0	11 600	12 550				**5.0**
6.0	8 300	9 200				**6.0**
7.0	6 150	7 000	6 550			**7.0**
8.0	4 550	5 400	6 000			**8.0**
9.0	3 400	4 200	4 800	4 950		**9.0**
10.0		3 300	3 850	4 200		**10.0**
12.0		1 950	2 500	2 800	3 050	**12.0**
14.0			1 550	1 900	2 100	**14.0**
16.0				1 200	1 9400	**16.0**
18.0				650	850	**18.0**
20.0					450	**20.0**

This information is not for crane operation. Operator must refer to the in−cab information for crane operation. Rated lifting capacities shown on fully extended outriggers do not exceed 75% of the tipping loads and on tires do not exceed 65% of the tipping loads.

Courtesy of CraneMarket.com

Main Boom Lift Capacity Charts — 85% — Metric

6.6t Counterweight (14,500 lbs) — Fully Extended Outriggers — 360° Rotation (All Capacities Are Listed In Kilograms)										
Radius (m)	Boom Length (m)									Radius (m)
	11.58	15.24	19.51—19.81	24.38	28.96	33.53	35.36	38.1	43.28	
2.5	70 000*									**2.5**
3.0	63 500	43 850	27 650							**3.0**
3.5	58 050	43 850	27 650							**3.5**
4.0	53 250	43 850	27 650	20 450						**4.0**
4.5	49 100	43 850	27 650	20 450						**4.5**
5.0	45 500	43 850	27 650	20 450	20 400					**5.0**
6.0	38 600	38 150	27 650	20 450	20 400	18 100				**6.0**
7.0	32 200	31 800	27 650	20 450	20 400	18 100				**7.0**
8.0	27 400	27 050	25 150	20 450	19 850	17 950	12 050	12 850		**8.0**
9.0	22 900	22 250	21 700	20 150	18 200	16 550	11 150	12 850	9 150	**9.0**
10.0		19 650	20 350	18 500	16 750	15 250	10 350	12 850	9 150	**10.0**
12.0		13 900	14 550	14 950	13 500	13 200	9 000	11 700	9 150	**12.0**
14.0			11 050	11 400	10 050	10 400	7 950	10 500	9 000	**14.0**
16.0			8 650	9 000	8 450	8 050	7 050	8 350	8 100	**16.0**
18.0				7 250	7 450	6 400	6 300	6 700	6 900	**18.0**
20.0				5 950	6 200	5 100	5 650	6 050	5 600	**20.0**
22.0				4 900	5 150	4 100	5 100	5 050	4 550	**22.0**
24.0					4 300	3 300	4 500	4 200	3 750	**24.0**
26.0					3 650	2 650	3 850	3 550	3 100	**26.0**
28.0						2 100	3 250	2 950	2 550	**28.0**
30.0						1 600	3 750	2 500	2 050	**30.0**
32.0							2 350	2 100	1 650	**32.0**
34.0								1 700	1 300	**34.0**
36.0									1 000	**36.0**
38.0									700	**38.0**

* Over Front Only

This information is not for crane operation. Operator must refer to the in—cab information for crane operation. Rated lifting capacities shown on fully extended outriggers do not exceed 75% of the tipping loads and on tires do not exceed 65% of the tipping loads.

Courtesy of CraneMarket.com

Fly Attachment Lift Capacity Charts — 85% Metric — Optional

6.6t Counterweight (14,500lbs) — Fully Extended Outriggers — 360° Rotation
(All Capacities Are Listed In Kilograms)

43.28m Main Boom Length

Radius (m)	10.7 m Fly Length				17.7 m Fly Length				Radius (m)
	0°	15°	30°	45°	0°	15°	30°	45°	
12.0	4 950								**12.0**
14.0	4 950				3 300				**14.0**
16.0	4 950	5 150			3 300				**16.0**
18.0	4 950	5 150	5 200		3 300				**18.0**
20.0	4 950	5 150	5 100	4 600	3 300	3 450			**20.0**
22.0	4 750	4 900	4 750	4 500	3 300	3 350			**22.0**
24.0	3 900	4 300	4 350	4 300	3 300	3 300	2 850		**24.0**
26.0	3 200	3 550	3 850	3 950	3 300	3 200	2 800	2 500	**26.0**
28.0	2 650	2 950	3 200	3 400	2 900	3 100	2 700	2 450	**28.0**
30.0	2 150	2 450	2 650	2 800	2 450	2 850	2 650	2 350	**30.0**
32.0	1 750	2 000	2 200	2 300	2 000	2 400	2 550	2 300	**32.0**
34.0	1 400	1 600	1 800	1 900	1 650	2 000	2 300	2 300	**34.0**
36.0	1 100	1 250	1 400	1 500	1 350	1 650	1 900	2 150	**36.0**
38.0	800	1 000	1 100	1 150	1 050	1 350	1 600	1 750	**38.0**
40.0	550	700	800	850	800	1 050	1 300	1 450	**40.0**
42.0		500	550		550	800	1 000	1 150	**42.0**
44.0						600	750	850	**44.0**
46.0						400	550		**46.0**

This information is not for crane operation. Operator must refer to the in−cab information for crane operation. Rated lifting capacities shown on fully extended outriggers do not exceed 75% of the tipping loads and on tires do not exceed 65% of the tipping loads.

Courtesy of CraneMarket.com

This Page Intentionally Blank

Courtesy of CraneMarket.com

This Page Intentionally Blank

Courtesy of CraneMarket.com

Link−Belt Cranes Lexington, Kentucky www.linkbelt.com

®Link−Belt is a registered trademark. Copyright 2024. We are constantly improving our products and therefore reserve the right to change designs and specifications.

Courtesy of CraneMarket.com