Technical Data

Specifications & Capacities

85|RT

Telescopic Boom Rough Terrain Crane
85 US ton
80 metric ton

CAUTION: This material is supplied for reference use only. Operator must refer to in−cab Crane Rating Manual and Operator's Manual to determine allowable crane lifting capacities and assembly and operating procedures.

Courtesy of CraneMarket.com

Courtesy of CraneMarket.com

Table Of Contents

Boom, Attachments, and Upper Structure **1**
Boom 1
Boom 1
Boom Wear Pads 1
Boom Head 1
Boom Elevation 1
Auxiliary Lifting Sheave 1
Hook Blocks and Balls − Optional 1
Smart Fly − Optional 1
Fly Controls 1
Operator's Cab and Controls 1
Swing 3
Electrical 3
Load Hoist System 3
Load Hoist Performance 3
Main and Auxiliary Winches 3
Hydraulic System 3
Counterweight 3
Carrier **4**
General 4
Outriggers 4
Steering and Axles 4
Suspension 4
Tires and Wheels 4
Brakes 4
Electrical 4
Engine 4
Transmission 4
Fuel Tank 4
Hydraulic System 5
Pump Drive 5
Maximum Speed 5
Paint 5
Additional Equipment Options 5
Gradeability 5
Axle Loads & Transport View **5**
General Dimensions **6**
Auxiliary Lifting Sheave **7**
Fly **7**
Counterweights **8**
Hook Balls **9**
Hook Blocks **9**
Working Range Diagram **10**
Boom Extend Modes **11**

Courtesy of CraneMarket.com

Main Boom Lift Capacity Charts − Imperial **12**
19,200lb Counterweight − Fully Extended Outriggers − 360° Rotation 12
Fly Attachment Lift Capacity Charts − Optional **13**
19,200lb Counterweight − Fully Extended Outriggers − 360° Rotation 13
35 ft Manual Offset Fly 13
58 ft Manual Offset Fly 13
Main Boom Lift Capacity Charts − On Tires − 75% − Imperial **14**
19,200lb Counterweight − On Tires − Stationary − Boom Centered Over The Front 14
19,200lb Counterweight − On Tires − Pick & Carry (Creep) − Boom Centered Over The Front 14
19,200lb Counterweight − On Tires − Pick & Carry (2.5mph) Boom Centered Over The Front 15
19,200lb Counterweight − On Tires − Stationary − 360° Rotation 15
Main Boom Lift Capacity Charts − 75% − Metric **16**
8.8mt Counterweight − Fully Extended Outriggers − 360° Rotation 16
Fly Attachment Lift Capacity Charts − 75% Metric − Optional **17**
8.8mt Counterweight − Fully Extended Outriggers − 360° Rotation 17
43.28m Main Boom Length − 10.7m Fly Length 17
43.28m Main Boom Length − 17.7m Fly Length 17
Main Boom Lift Capacity Charts − On Tires − 75% − Metric **18**
8.8mt Counterweight −On Tires − Stationary − Boom Centered Over Front Between Tire Tracks . . . 18
8.8mt Counterweight − On Tires − Pick & Carry (Creep) Boom Centered Over The Front 18
8.8mt Counterweight − On Tires − Pick and Carry − 4 km/h (2.5mph) Boom Centered Over The Front 19
8.8mt Counterweight − On Tires − Stationary − 360° Rotation 19
Main Boom Lift Capacity Charts − 85% − Metric **20**
8.8mt Counterweight − Fully Extended Outriggers − 360° Rotation 20
Fly Attachment Lift Capacity Charts − 85% Metric − Optional **21**
8.8mt Counterweight − Fully Extended Outriggers − 360° Rotation 21
43.28m Main Boom Length − 10.7m Fly Length 21
43.28m Main Boom Length − 17.7m Fly Length 21

Courtesy of CraneMarket.com

Boom, Attachments, and Upper Structure

■ Boom

Design − Five section, formed construction of extra high tensile steel consisting of one base section and four telescoping sections.

Boom

- 38−142 ft (*11.58−43.28m*) five section full power boom
- Two boom extension modes controlled from the operator's cab provide superior capacities by varying the extension of the telescoping sections. EM1 mode extends sections T2, T3, and T4 proportionally to a 116 ft (*35.36m*) boom length. Next, section T1 extends to reach full 142 ft (*43.28m*) boom length. EM2 mode extends the T1 section to reach a 64 ft (*19.51m*) boom length. Next, sections T2, T3, and T4 extend proportionally to reach the full 142 ft (*43.28m*) boom length.
- Mechanical boom angle indicator
- Maximum tip height is 151 ft (*46m*).

Boom Wear Pads

- Wear pads with Teflon inserts that self−lubricate the boom sections
- Bottom wear pads are universal for some boom sections
- Top wear pads are universal for some boom sections

Boom Head

- Five 16.5 in (*41.9cm*) root diameter nylon sheaves to handle up to ten parts of line
- Easily removable wire rope guards
- Rope dead end lugs on each side of the boom head
- Boom head is designed for quick−reeve of the hook block
- Wind speed indicator
- Aviation obstruction solar marking light and flag − optional

Boom Elevation

- One double acting hydraulic cylinder with integral holding valve
- Boom elevation: −3° to 80°

Auxiliary Lifting Sheave

- Single 16.5 in (*41.9cm*) root diameter nylon sheave
- Easily removable wire rope guards
- Does not affect erection of the fly or use of the main head sheaves

Hook Blocks and Balls − Optional

- 27 ton (*25mt*) 1 sheave quick−reeve hook block with safety latch
- 60 ton (*55mt*) 3 sheave quick−reeve hook block with safety latch
- 90 ton (*82mt*) 5 sheave quick−reeve hook block with safety latch
- 10 ton (*9mt*) swivel hook ball with safety latch

SmartFly − Optional

- 35−58 ft (*10.7−17.7m*) two piece bi−fold lattice fly, stowable, offsettable to 0°, 15°, 30°, and 45°. Maximum tip height is 209 ft (*63.7m*).

SmartFly Controls

- One Person assembly, minimizing ladder climbs
- Control box with fly assist and boom hoist cylinder switches located on front frame
- Sure−lock system prevents fly from ever being completely unpinned during assembly
- Speed screws for boom head and pivot point

■ Operator's Cab and Controls

Environmental Cab − Fully enclosed, one person cab of tubular and sheet steel structure with formed plastic interior panels.

Equipped with:

- Tinted and tempered glass windows
- Extra−large fixed front window with time delayed windshield wiper and washer
- Swing up roof window with windshield wiper and washer
- Sliding left side door with large fixed window
- Sliding right side window and pop−out rear window for ventilation
- Six way adjustable, cushioned seat with seat belt and storage compartment
- Diesel fired warm−water heater with ten air ducts for front windshield defroster and cab floor
- Air Conditioning − Integral with cab heating system utilizing the same ventilation outlets and automatic temperature control (ATC)
- Adjustable sun screen
- Dome lights with red nighttime reading LED's
- Cup holder
- Fire extinguisher
- Two position travel swing lock
- AM/FM radio with Bluetooth

Engine Dependent Warm−Water Heater − Optional − With air ducts for front windshield defroster and cab floor

Courtesy of CraneMarket.com

Steering Column − Pedestal type with tilt and telescope functions for operator comfort. Column includes the following controls and indicators:
- Horn button
- Turn signal switch
- Driving light switch
- Transmission gear selector
- Transmission Direction Switches
- Travel park brake
- 2/4 wheel drive/range selector
- Hazard flasher

Armrest Controls − Two dual axis electronic joystick controllers or optional single axis electronic controllers for:
- Swing
- Boom hoist
- Main (rear) winch
- Auxiliary (front) winch
- Winch high/low speed switch(es)
- Warning horn button
- Swing park brake switch
- Engine throttle lock switch
- Engine set/resume switch
- Cab tilt
- Telescope override

Outrigger Controls − Hand held control box with linked cord gives the operator the freedom to view operation while setting the outriggers.

Foot Controls
- Boom telescope
- Swing brake
- Engine throttle
- Service brake

Upper Right Console − Controls and indicators for:
- Engine ignition
- Engine stop
- Function lockout and washer
- Horn
- Dome light with switch
- E−stop switch
- Front windshield wiper
- Radio
- DRI on/off selection
- HVAC controller
- Boom floodlights
- Rotating beacon/Strobe light
- Top hatch wiper washer
- Winch(es) disable
- Engine indicator gauge
- 360 swing lock − optional
- Cab lights and upper frame lights − optional

Rear Right Side Panel
- 12V accessory outlet (10amp)
- USB charge port

Camera Display − Located on the right A−post with an adjustable mount
- Displays right side of upper
- Displays main and auxiliary winches
- Displays rear view

Diagnostic Center − Located on the right rear wall behind the seat.
- Engine diagnostic
- RCL CANBUS diagnostic
- Boom CANBUS diagnostic
- Outrigger CANBUS diagnostic

Fuse & Relay Panel − Located on the left rear wall behind the seat.

Link-Belt Pulse 2.0 – The Link-Belt in-house designed, total crane operating system that utilizes a 10 in touch screen color display with integrated RCL and engine data, advanced diagnostics and systems monitoring, Wi–Fi capable for remote software updates, operator customizable, and a readout and operator interface for the following systems:
- **Rated capacity limiter** – LCD graphic audio – visual warning system integrated into the dash with anti – two block and function limiter. Operating data includes:
  - RCL controller USB diagnostic
  - Crane configuration
  - Boom length and angle
  - Boom head height
  - Allowed load and % of allowed load
  - RCL light bar
  - Boom angle
  - Radius of load
  - Actual load
  - Wind speed
  - Highlighted unit of measurement on working screen
  - Telescope operation displayed in real time
  - Steer mode selector
  - Outrigger position sensing
  - Drum Rotation direction indication
  - Diagnostics
  - Operator settable alarms (include):
    - Maximum and minimum boom angles
    - Maximum tip height
    - Maximum boom length
    - Swing left/right positions
    - Operator defined area (imaginary plane)
- **Cab Instrumentation**
  - Tachometer
  - Engine water temperature
  - Fuel level
  - Hydraulic oil temperature
  - Stop engine
  - Check engine
  - Wait to start
  - Swing park brake light
  - Engine speed
  - Engine oil pressure
  - Battery voltage
  - Fuel rate (gal/hr)
  - Engine load
  - Engine Diagnostics
  - Diesel exhaust fluid (DEF) level
  - Engine air filter high restriction light
  - Regeneration light
  - Regeneration inhibit switch
  - Regeneration initiate switch
  - High exhaust temperature light
  - Regeneration disabled light
- **Telematics** – Cellular based data logging and monitoring system that provides:
  - Location and operational settings
  - Routine maintenance
  - Crane and engine monitoring
  - Diagnostic and fault codes

Internal RCL Light Bar − Visually informs the operator when crane is approaching maximum load capacity with a series of green, yellow, and red lights.

Integrated Third Wrap Indicator − Link-Belt Pulse 2.0 visually and audibly warns the operator when the wire rope is on the first/bottom layer and when the wire rope is down to the last three wraps.

Integrated Third Wrap Function Kickout − Link-Belt Pulse 2.0 visually and audibly warns the operator when the wire rope is on the first/bottom layer and provides a function kickout when the wire rope is down to the last three wraps.

External RCL Light Bar − Optional − Visually informs the ground crew when crane is approaching maximum load capacity with a series of green, yellow, and red lights.

Courtesy of CraneMarket.com

■ Swing

Motor/Planetary — Bi−directional hydraulic swing motor mounted to a planetary reducer for 360° continuous smooth swing at 1.9 rpm

Swing Park Brake — 360°, electric over hydraulic, (spring applied/hydraulic released) multi−disc brake mounted on the speed reducer. Operated by a switch in the operator's cab.

Swing Brake — 360°, foot operated, speed reducing system with disc brake hold feature

Swing Lock — Two−position swing lock (boom over front or rear) operated from the operator's cab

360° Positive Swing Lock — Optional — Meets New York City requirement

■ Electrical

Swing Alarm — Audio warning device signals when the upper is swinging.

Lights

- Two LED working lights on front of the cab
- Two amber strobe lights at rear of the upper frame
- LED Boom floodlight — Dual
- LED Frame work lights — right front, left rear, and work platform
- One LED working light on top of cab — optional
- LED Boom floodlight — High intensity remote controlled — optional

■ Load Hoist System

Load Hoist Performance

Main (Rear) and Auxiliary (Front) Winches — 3/4 in (*19mm*) Rope										
	Maximum Line Pull		Normal Line Speed		High Line Speed		Layer		Total	
Layer	lb	*kN*	ft/min	*m/min*	ft/min	*m/min*	ft	*m*	ft	*m*
1	18,603	*82.8*	168	*51.2*	359	*109.4*	114	*34.7*	114	*34.7*
2	17,103	*76.08*	183	*55.8*	391	*119.2*	124	*37.8*	238	*72.5*
3	15,827	*70.4*	198	*60.4*	422	*128.6*	134	*40.8*	372	*113.4*
4	14,728	*65.51*	212	*64.6*	454	*138.4*	144	*43.9*	516	*157.3*
5	13,772	*61.26*	227	*69.2*	485	*147.8*	154	*46.9*	670	*204.2*

Wire Rope Application		Diameter		Type	Maximum Permissible Load	
Main (Rear) Winch	Standard	3/4	*19*	37x7 Category 1, E.E.I.P.S., right lang lay (Type KC) Galvanized	16,000	*7 257.5*
	Optional	3/4	*19*	35x7 Category 1, E.E.I.P.S., right lang lay (Type CC)	17,160	*7 783.6*
	Optional	3/4	*19*	34x7 Category 1, E.E.I.P.S., right lang lay (Type YB)	16,000	*7 257.5*
Auxiliary (Front) Winch	Standard	3/4	*19*	37x7 Category 1, E.E.I.P.S., right lang lay (Type KC) Galvanized	16,000	*7 257.5*
	Optional	3/4	*19*	35x7 Category 1, E.E.I.P.S., right lang lay (Type CC)	17,160	*7 783.6*
	Optional	3/4	*19*	34x7 Category 1, E.E.I.P.S., right lang lay (Type YB)	16,000	*7 257.5*

Main and Auxiliary Winches

- Axial piston, full and half displacement (2−speed) motors driven through planetary reduction unit for positive control under all load conditions
- Grooved lagging
- Power up/down mode of operation
- Drum rotation indicator(s)
- Drum diameter: 16 in (*40.6cm*)
- Rope length:
  - Front: 500 ft (*152.4m*)
  - Rear: 600 ft (*182.9m*)
- Maximum rope storage: 670 ft (*204.2m*)
- Terminator style socket and wedge
- Encoders for reading rope payout
- Hoist drum cable followers — optional

■ Hydraulic System

Counterbalance Valves — All hoist motors, boom extend cylinders, and boom hoist cylinders are equipped with counterbalance valves to control load lowering. This prevents accidental load drop when hydraulic power is suddenly reduced.

■ Counterweight

Total of 19,200 lb (*8.8t*) counterweight pinned to the upper with capacities for:

- 0 lb (*0t*) counterweight*
- 9,600 lb (*4.4t*) counterweight
- 19,200 lb (*8.8t*) counterweight**

* Travel speed limited to 10 mph.
** Travel speed limited to 15 mph.

Hydraulic counterweight removal — activated by a hand−held controller with enough cable to access the pins on each side of the counterweights.

Courtesy of CraneMarket.com

Carrier

■ General

- 10 ft 7 in (*3.22m*) wide
- 14 ft 7 in (*4.45m*) wheelbase (centerline of first axle to centerline of second axle)

Frame − Box−type, torsion resistant, welded construction made of high tensile steel. Equipped with front and rear towing and tie−down lugs, tow connections, and access ladders.

■ Outriggers

Boxes − Two double box, front and rear welded to carrier frame

Beams and Jacks − Four single stage beams that are hydraulically controlled from the operator's cab with integral check valves

V−CALC − Variable confined area lifting capabilities that are incorporated directly into the Pulse 2.0 display allowing multiple outrigger configurations with live on screen working radii, utilizing 360° charts, and swing arrest

Pontoons − Four lightweight, quick release, 24 in (*61cm*), steel pontoons with contact area of 452 in^2 (*2 916*cm^2) can be stored for road travel in storage racks on the carrier

Main Jack Reaction − 98,000 lb (*44 452kg*) force and 217 psi (*1 496kPa*) maximum ground bearing pressure

■ Steering and Axles

Steering − Four independent modes consisting of two wheel front, two wheel rear, four wheel, and crab. Each mode is controlled from the steering wheel and is selected by a switch in the operator's cab.

Drive − Two modes: 4 x 2 and 4 x 4 for off highway travel

Axle 1 − Steered, non−driven for 4 x 2 and steered, driven for 4 x 4

Axle 2 − Steered, driven

■ Suspension

Front − Rigid mount to the carrier frame

Rear − The rear axle is suspended on the oscillation cylinders with motion of the axle controlled by a four bar linkage system. The oscillation cylinders lockout when the upper structure rotates 2.5° past centerline.

- Hydro−gas rear suspension − optional

■ Tires and Wheels

Front and Rear − Four (single) 26.5 x 25−32 ply rating, earthmover type tires on steel disc wheels

- Spare tires and wheels − optional

■ Brakes

Service − Full hydraulic, dual circuit, disc type brakes on all wheel ends

Parking/Emergency − Spring applied type, acting on front axle

■ Electrical

Two batteries provide 24 volt starting and operation

Lights

- All lights are LED.
- Front lighting includes two main headlights, outrigger lights, and two parking/directional indicators.
- Side lighting includes two parking/directional indicators per side.
- Rear lighting includes two parking/directional indicators, two parking/brake lights, and two reversing lights.
- Other equipment includes hazard/warning system, cab light, instrument panel light, and signal horn.

■ Engine

Specification	Cummins QSB	
Numbers of Cylinders	6	6
Cycle	4	4
Emissions Compliance Level:	Tier 4f/Stage IV(1)	Tier 3/Stage IIIA(2)
Bore and Stroke: inch (*mm*)	4.21 x 4.88 (*107 x 124*)	4.21 x 4.88 (*107 x 124*)
Piston Displacement: in^3 (*L*)	408 (*6.7*)	408 (*6.7*)
Max. Brake Horse-power: hp (*kW*)	270 (*201*) @ 2,000 rpm 260 (*194*) @ 2,200 rpm	270 (*201*) @ 2,000 rpm 260 (*194*) @ 2,200 rpm
Peak Torque: ft lb (*Nm*)	730 (*990*) @ 1,500 rpm	730 (*990*) @ 1,500 rpm
Electric/starting systems: volts	24/24	24/24
Alternator: amps	140	140
Crankcase Capacity: qt (*L*)	15 (*14.2*)	15 (*14.2*)

- Water/fuel separator w/ heater and water in fuel (WIF) sensor
- 120−volt block heater − Tier 4f / Stage IV
- 220−volt block heater − Tier 3 / Stage IIIA
- Grid heater − 112 amp
- Mechanically driven, variable speed, engine controlled, viscous fan clutch
- (1) Can only be sold and/or operated where Tier 4f and Stage IV off−highway emission standards are accepted.
- (2) Can only be sold and/or operated where Tier 3 and Stage IIIA off−highway emission standards are accepted.

■ Transmission

Powershift − Three speed with high/low range for 6 forward and 6 reverse gears. Front axle disconnect for two or four wheel drive. Front axle disconnects in high range.

■ Fuel Tank

- One 75 gallon (*283.9L*) capacity fuel tank
- One 5 gal (*18.9L*) capacity diesel exhaust fluid (DEF) tank

Courtesy of CraneMarket.com

■ Hydraulic System

All functions are hydraulically powered allowing positive precise control with independent or simultaneous operation of all functions.

Main Pumps

- One variable displacement, load sense, piston pump with anti−stall for the front/rear winches, boom hoist, and telescope circuits
- One two section fixed displacement gear pump for the power steering/swing and for the service brakes/outriggers/oscillation/counterweights
- One single section gear pump for the hydraulic oil cooler fan drive
- Combined pump capacity of 127 gpm (*480.7Lpm*)

Hydraulic Reservoir − 173 gal (*654.9L*) capacity equipped with sight level gauge. Diffusers built in for deaeration.

Filtration − One 5 micron, full flow line filter in the control circuit. All oil is filtered prior to return to reservoir. Accessible for easy filter replacement.

Hydraulic Oil Coolers − One carrier mounted cooler removes heat from the hydraulic oil. Remote mounted on right side of the carrier.

■ Pump Drive

All pumps are mounted on the transmission and mechanically driven by the diesel engine.

■ Maximum Speed

20 mph (*32 km/h*)

■ Paint

Entire machine is pre-painted and oven baked with Highsolid Paint (2 part epoxy/polyester) and/or (2 part epoxy primer/2 part polyurethane top coat). Standard Link-Belt Red, Link-Belt Gray, and Gloss Black colors apply.

■ Additional Equipment Options

- Spark arrestor − optional
- Engine air intake shutoff valve − optional

■ Gradeability

Counterweight	Ascending		Descending		Side	
	Degrees	% Grade	Degrees	% Grade	Degrees	% Grade
0	16.0	29%	7.0	12%	5.0	9%
9,600 lb (*4.4t*)	14.0	25%	14.0	25%	5.0	9%
19,200 lb (*8.8t*)	13.0	23%	13.0	23%	5.0	9%

Axle Loads & Transport View

Base Machine		Gross Vehicle Weight		Front Axles		Rear Axles	
Includes: two winches with cable followers, standard wire rope, 19,200 lb counterweight, floodlights, auxiliary lifting sheave, 35−58 ft offset fly, 60 T hook block, and 10 T hookball		lb	kg	lb	kg	lb	kg
	Tier 3 / Stage	104,539	47,418	52,552	23,837	51,987	23,581
	Tier 4f / Stage IV	104,838	47,554	52,703	23,906	52,135	23,648
Remove	Full 19,200 lb counterweight	−19,373	−8,788	6,985	3,169	−26,359	−11,956
	35−58 ft Offset Fly	−2,650	−1,202	−3,981	−1,806	1,331	604
	Auxiliary Lifting Sheave	−110	−50	−297	−135	187	85
	60T hook block	−1,150	−522	−2,990	−1,356	1,840	835
	10T hookball	−584	−265	−1,518	−689	934	424

Tire	Maximum Allowable Axle Load @ 20 mph (*32.2km/h*)
26.5 x 25 (32−PR)	55,200 lb (*25 038kg*)

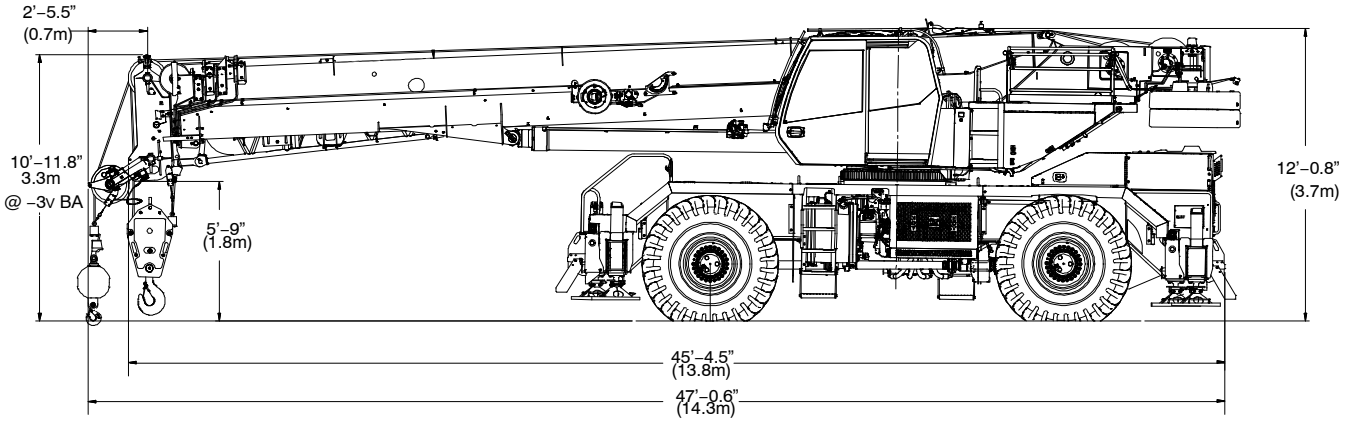

Courtesy of CraneMarket.com

General Dimensions

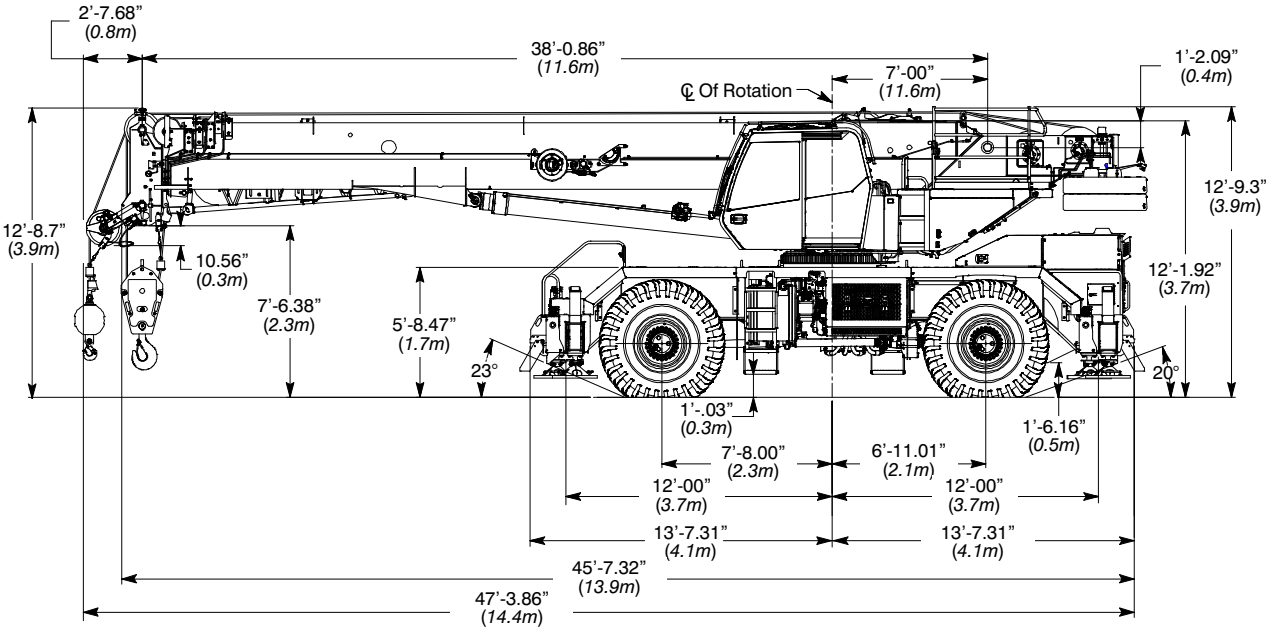

Turning Radius – Front Wheel (4x2) Steering	English	*Metric*
Wall to wall over carrier	43’ 2”	*13.2m*
Wall to wall over boom attachment	53’ 3”	*16.2m*
Curb to curb	41’ 6”	*12.6m*
Centerline of tire	40’ 0”	*12.2m*

Turning Radius – All Wheel (4x4) Steering	English	*Metric*
Wall to wall over carrier	26’ 6”	*8.1m*
Wall to wall over boom attachment	38’ 0”	*11.6m*
Curb to curb	24’ 10”	*7.6m*
Centerline of tire	23’ 6”	*7.2m*

Tail Swing	English	*Metric*
With counterweight	13’ 7.98”	*4.17m*
Without counterweight	13’ 0.73”	*4.0m*

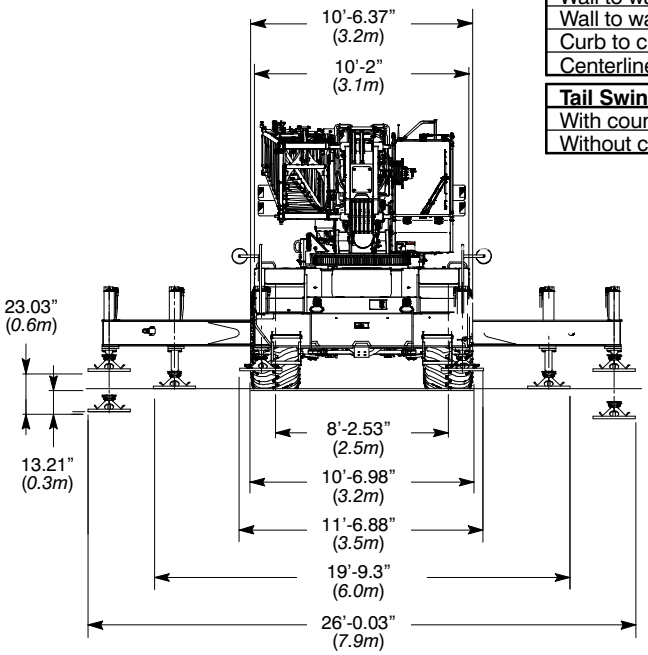

Not To Scale

Courtesy of CraneMarket.com

Auxiliary Lifting Sheave

Auxiliary Lifting Sheave ❶

Length	34.4 in	*(0.87m)*
Width	19.59 in	*(0.50m)*
Height	22.53 in	*(0.57m)*
Weight	96 lb	*(44kg)*

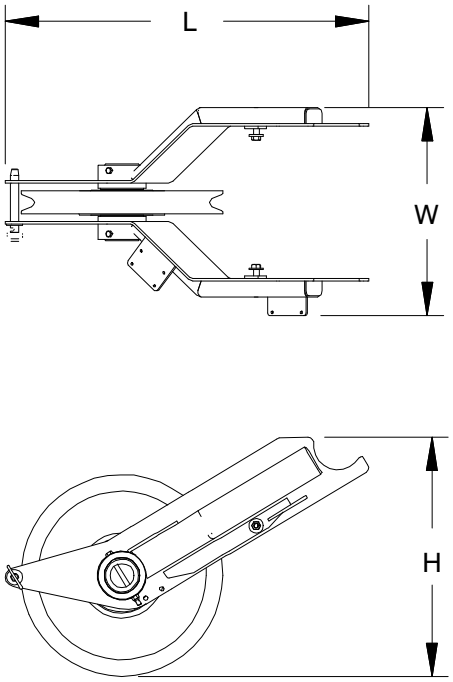

Fly

35 ft *(10.7m)* One Piece Lattice Fly (Base Fly) ❶

Length	35.7 ft	*(10.88m)*
Width	35.5 in	*(0.90m)*
Height	53 in	*(1.35m)*
Weight	2,026 lb	*(919kg)*

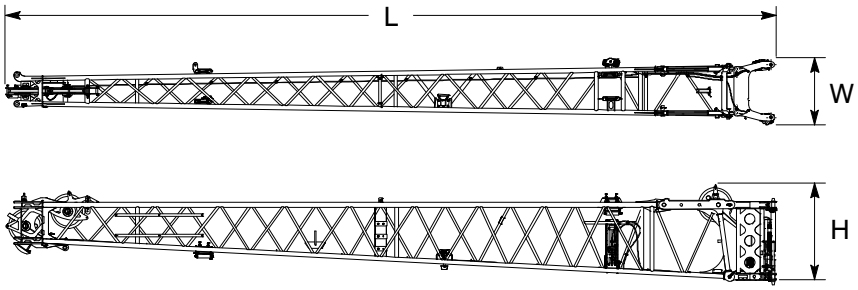

23 ft *(7.01m)* Lattice Fly Tip (Addition To Base Fly For 35−58 ft *(10.7−17.7m)* Bi−fold Fly) ❶

Length	24 ft	*(7.32m)*
Width	19 in	*(0.48m)*
Height	26 in	*(0.66m)*
Weight	610 lb	*(277kg)*

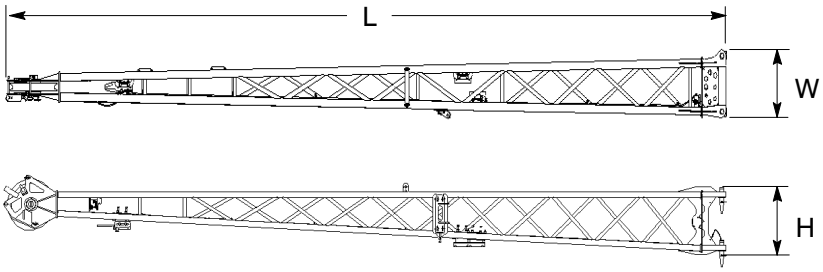

Number inside black circle "❶" = # of components
* − Optional equipment

Courtesy of CraneMarket.com

Counterweights

"A" Counterweight ❷

Length	45.16 in	*(1.15m)*
Width	9 ft 10 in	*(3.00m)*
Height	8.8 in	*(0.22m)*
Weight	9,652 lb	*(4 378kg)*

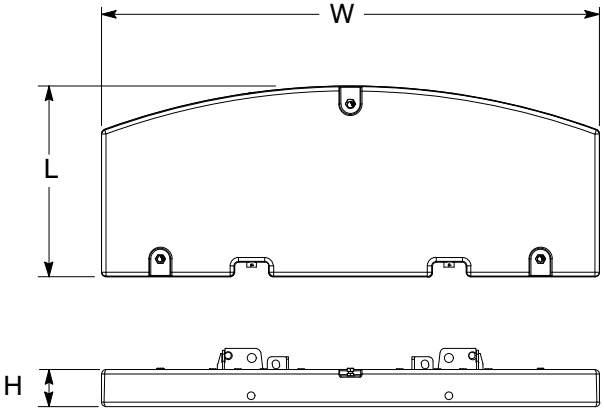

Number inside black circle "❷" = # of components
* – Optional equipment

Courtesy of CraneMarket.com

Hook Balls

10.0 Ton *(9mt)* Swivel Hook Ball* ❶

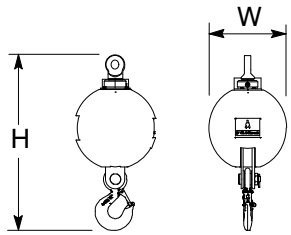

Width	16.73 in	*(0.43m)*
Height	34.92 in	*(0.89m)*
Weight	583 lb	*(265kg)*

Hook Blocks

27.5 Ton *(25mt)* 1−Sheave Hook Block* ❶

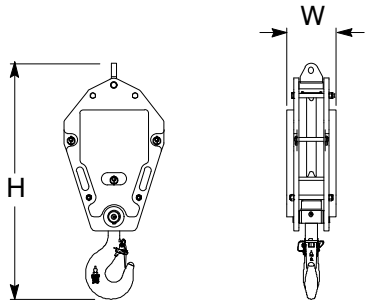

Width	13.46 in	*(0.34m)*
Height	52.87 in	*(1.34m)*
Weight	800 lb	*(362.9kg)*

60 Ton *(55mt)* 3−Sheave Hook Block* ❶

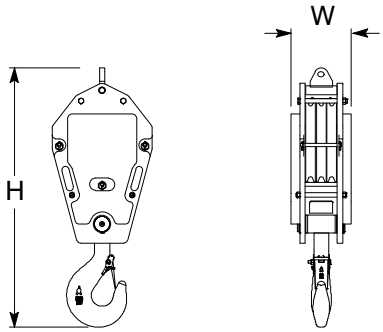

Width	13.46 in	*(0.34m)*
Height	58.16 in	*(1.48m)*
Weight	1,150 lb	*(521.6kg)*

90 Ton *(82mt)* 5−Sheave Hook Block* ❶

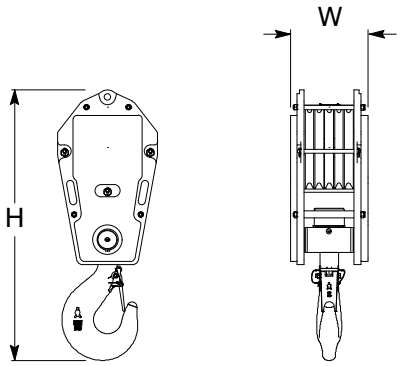

Width	17.40 in	*(0.44m)*
Height	60.62 in	*(1.54m)*
Weight	1,750 lb	*(793.8kg)*

Number inside black circle "❶" = # of components
* − Optional equipment

Courtesy of CraneMarket.com

Working Range Diagram

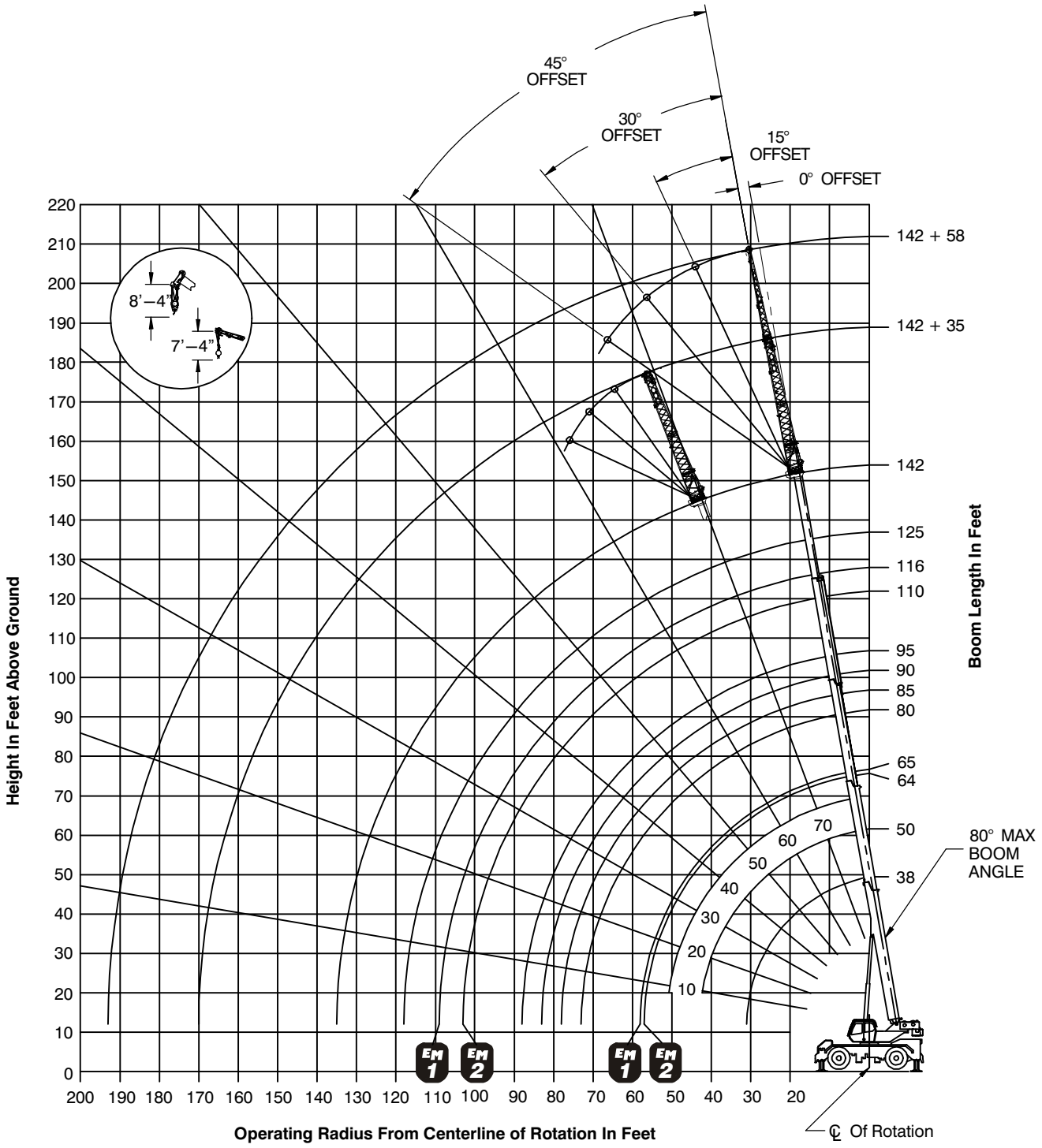

Courtesy of CraneMarket.com

Boom Extend Modes

	Boom Length		Telescope Length			
	ft	*m*	T4	T3	T2	T1
	38	*11.58*				
	50	*15.24*	15%	15%	15%	
	65	*19.81*	35%	35%	35%	
	80	*24.38*	54%	54%	54%	
*	90	*27.43*	67%	67%	67%	
	95	*28.96*	73%	73%	73%	
	116	*35.36*	100%	100%	100%	
	125	*38.10*	100%	100%	100%	35%
	142	*43.28*	100%	100%	100%	100%

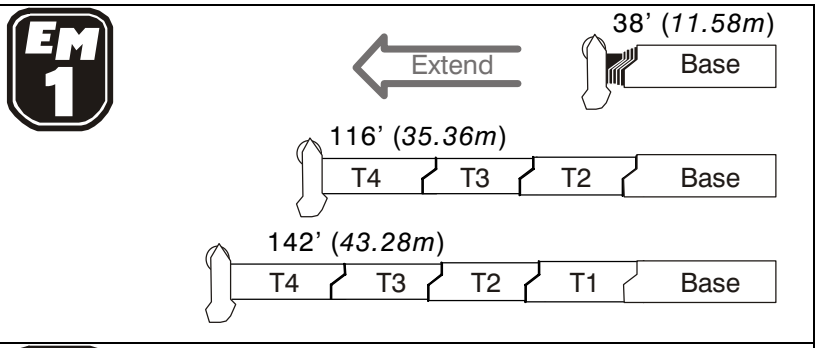

	Boom Length		Telescope Length			
	ft	*m*	T4	T3	T2	T1
	38	*11.58*				
	50	*15.24*				46%
	64	*19.51*				100%
	80	*24.38*	21%	21%	21%	100%
*	85	*25.91*	27%	27%	27%	100%
	95	*28.96*	40%	40%	40%	100%
	110	*33.53*	59%	59%	59%	100%
	125	*38.10*	78%	78%	78%	100%
	142	*43.28*	100%	100%	100%	100%

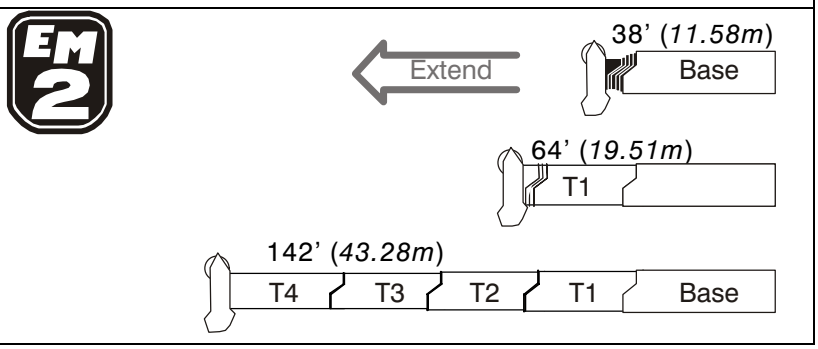

* Denotes boom lengths charted with 35’ or 58’ fly capacities only.

Courtesy of CraneMarket.com

Main Boom Lift Capacity Charts — Imperial

19,200lb Counterweight — Fully Extended Outriggers — 360° Rotation
(All Capacities Are Listed In Pounds)

Radius (ft)	Boom Length (ft)									Radius (ft)
	38	50	64/65	80	95	110	116	125	142	
8	170,000*									8
9	140,000									9
10	140,000	96,800	61,000							10
12	125,300	96,800	61,000	45,000						12
15	107,700	96,800	61,000	45,000						15
20	86,500	85,500	61,000	45,000	45,000	40,000				20
25	66,500	65,600	57,600	45,000	45,000	40,000	27,400	28,300		25
30	53,100	52,400	50,000	43,900	39,600	36,000	24,300	28,300	20,200	30
35		42,700	44,100	38,600	35,000	32,000	21,800	27,800	20,200	35
40		33,300	34,800	34,200	31,300	28,700	19,600	25,500	20,200	40
45			28,300	29,100	26,100	25,900	17,800	23,500	20,100	45
50			23,500	24,300	21,400	22,200	16,200	21,700	18,600	50
55			19,800	20,600	17,900	18,500	14,800	19,100	16,900	55
60				17,600	16,500	15,800	13,700	16,200	15,800	60
65				15,300	15,300	13,400	12,600	14,000	14,500	65
70				13,300	13,800	11,500	11,700	12,500	12,500	70
75					12,100	9,900	10,800	11,700	10,900	75
80					10,700	8,500	10,100	10,500	9,500	80
85					9,400	7,300	9,400	9,200	8,300	85
90						6,200	8,800	8,200	7,200	90
95						5,300	7,900	7,200	6,300	95
100						4,400	7,000	6,400	5,500	100
105							6,300	5,700	4,700	105
110								5,000	4,100	110
115								4,400	3,500	115
120									2,900	120
125									2,400	125
130									2,000	130

* Over Front Only

This information is not for crane operation. Operator must refer to the in−cab information for crane operation. Rated lifting capacities shown on fully extended outriggers do not exceed 85% of the tipping loads and on tires do not exceed 75% of the tipping loads.

Courtesy of CraneMarket.com

Fly Attachment Lift Capacity Charts − Optional

19,200lb Counterweight − Fully Extended Outriggers − 360° Rotation
(All Capacities Are Listed In Pounds)

Radius (ft)	142 ft Main Boom Length								Radius (ft)
	35 ft Manual Offset Fly				58 ft Manual Offset Fly				
	0°	15°	30°	45°	0°	15°	30°	45°	
40	10,900								**40**
45	10,900				7,200				**45**
50	10,900	11,300			7,200				**50**
55	10,900	11,300			7,200				**55**
60	10,900	11,300	11,400		7,200				**60**
65	10,900	11,300	11,200	10,100	7,200	7,700			**65**
70	10,900	11,100	10,800	10,000	7,200	7,500			**70**
75	10,600	10,400	10,100	9,800	7,200	7,400			**75**
80	9,800	9,700	9,500	9,400	7,200	7,200	6,300		**80**
85	8,500	9,000	8,900	8,800	7,200	7,000	6,200	5,500	**85**
90	7,500	8,100	8,300	8,300	7,200	6,900	6,100	5,400	**90**
95	6,500	7,100	7,700	7,800	7,100	6,800	5,900	5,300	**95**
100	5,700	6,300	6,700	7,100	6,300	6,600	5,800	5,200	**100**
105	5,000	5,500	5,900	6,200	5,500	6,400	5,700	5,100	**105**
110	4,300	4,800	5,100	5,400	4,800	5,600	5,600	5,000	**110**
115	3,700	4,100	4,500	4,700	4,200	5,000	5,400	5,000	**115**
120	3,200	3,500	3,800	4,000	3,700	4,400	5,000	4,900	**120**
125	2,700	3,000	3,300	3,400	3,200	3,800	4,400	4,700	**125**
130	2,200	2,500	2,800	2,900	2,700	3,300	3,800	4,100	**130**
135	1,800	2,100	2,300	2,400	2,300	2,800	3,300	3,600	**135**
140	1,400	1,700	1,800		1,900	2,400	2,800	3,100	**140**
145	1,100	1,300	1,400		1,500	2,000	2,400	2,600	**145**
150		900	1,100		1,200	1,600	2,000	2,100	**150**
155					900	1,300	1,600	1,700	**155**
160						1,000	1,200	1,300	**160**
165							900		**165**

This information is not for crane operation. Operator must refer to the in−cab information for crane operation. Rated lifting capacities shown on fully extended outriggers do not exceed 85% of the tipping loads and on tires do not exceed 75% of the tipping loads.

Courtesy of CraneMarket.com

Main Boom Lift Capacity Charts — On Tires — 75% — Imperial

19,200lb Counterweight — On Tires — Stationary — Boom Centered Over The Front
(All Capacities Are Listed In Pounds)

Radius (ft)	Boom Length (ft)					Radius (ft)
	38	50	64/65	80	95	
10	71,000					10
12	62,600	46,700				12
15	53,000	46,700	36,500			15
20	41,700	43,300	36,500	23,600		20
25	33,700	35,400	36,500	23,600		25
30	26,300	28,400	29,700	23,600	19,300	30
35		21,600	22,900	23,600	19,300	35
40		16,900	18,200	18,900	19,300	40
45			14,800	15,500	15,800	45
50			12,100	12,900	13,300	50
55			10,000	10,700	11,200	55
60				9,000	9,500	60
65				7,600	8,100	65
70				6,400	6,900	70
75					5,900	75
80					5,000	80
85					4,300	85

19,200lb Counterweight — On Tires — Pick & Carry (Creep) — Boom Centered Over Front
(All Capacities Are Listed In Pounds)

Radius (ft)	Boom Length (ft)					Radius (ft)
	38	50	64/65	80	95	
10	68,400					10
12	59,900	46,700				12
15	49,900	46,700	36,500			15
20	38,200	39,700	36,500	23,600		20
25	30,100	31,700	32,700	23,600		25
30	24,100	25,800	27,000	23,600	19,300	30
35		21,300	22,500	23,200	19,300	35
40		16,900	18,200	18,900	19,300	40
45			14,800	15,500	15,800	45
50			12,100	12,900	13,300	50
55			10,000	10,700	11,200	55
60				9,000	9,500	60
65				7,600	8,100	65
70				6,400	6,900	70
75					5,900	75
80					5,000	80
85					4,300	85

This information is not for crane operation. Operator must refer to the in−cab information for crane operation. Rated lifting capacities shown on fully extended outriggers do not exceed 85% of the tipping loads and on tires do not exceed 75% of the tipping loads.

Courtesy of CraneMarket.com

19,200lb Counterweight — On Tires — Pick & Carry (2.5mph) — Boom Centered Over Front
(All Capacities Are Listed In Pounds)

Radius (ft)	Boom Length (ft)					Radius (ft)
	38	50	64/65	80	95	
10	42,500					10
12	36,700	37,900				12
15	29,900	31,300	32,200			15
20	21,800	23,400	24,500	23,600		20
25	16,300	17,900	19,000	19,700		25
30	12,200	14,000	15,100	15,800	16,200	30
35		10,900	12,100	12,800	13,300	35
40		8,500	9,700	10,400	10,900	40
45			7,800	8,500	9,000	45
50			6,200	6,900	7,400	50
55			4,800	5,600	6,100	55
60				4,500	5,000	60
65				3,500	4,000	65
70				2,600	3,100	70
75					2,400	75
80					1,700	80
85					1,200	85

19,200lb Counterweight — On Tires — Stationary — 360° Rotation
(All Capacities Are Listed In Pounds)

Radius (ft)	Boom Length (ft)					Radius (ft)
	38	50	64/65	80	95	
15	34,900					15
20	21,200	23,200				20
25	13,900	15,800				25
30	9,300	11,100	12,400			30
35		8,000	9,200	9,900		35
40		5,600	6,900	7,600		40
45			5,100	5,800	6,200	45
50			3,700	4,400	4,800	50
55			2,600	3,300	3,700	55
60				2,300	2,800	60
65				1,600	2,000	65
70					1,300	70

This information is not for crane operation. Operator must refer to the in−cab information for crane operation. Rated lifting capacities shown on fully extended outriggers do not exceed 85% of the tipping loads and on tires do not exceed 75% of the tipping loads.

Courtesy of CraneMarket.com

Main Boom Lift Capacity Charts — 75% — Metric

8.8t Counterweight (19,200 lbs) — Fully Extended Outriggers — 360° Rotation
(All Capacities Are Listed In Kilograms)

Radius (m)	Boom Length (m)									Radius (m)
	11.58	15.24	19.51−19.81	24.38	28.96	33.53	35.36	38.1	43.28	
2.5	80 000*									**2.5**
3.0	63 500	43 850	27 650							**3.0**
3.5	58 400	43 850	27 650							**3.5**
4.0	53 550	43 850	27 650	20 400						**4.0**
4.5	49 400	43 850	27 650	20 400						**4.5**
5.0	45 800	43 850	27 650	20 400	20 400					**5.0**
6.0	39 800	39 450	27 650	20 400	20 400	18 100				**6.0**
7.0	33 350	32 950	27 650	20 400	20 400	18 100				**7.0**
8.0	28 450	28 000	25 150	20 400	19 850	17 950	12 050	12 800		**8.0**
9.0	22 450	21 900	21 450	20 150	18 200	16 550	11 150	12 800	9 150	**9.0**
10.0		19 250	19 850	18 200	16 750	15 250	10 350	12 800	9 150	**10.0**
12.0		13 750	14 350	14 600	13 350	13 200	9 000	11 700	9 150	**12.0**
14.0			10 950	11 250	10 000	10 350	7 950	10 500	9 000	**14.0**
16.0			8 600	8 900	8 450	8 100	7 050	8 300	8 100	**16.0**
18.0				7 250	7 400	6 500	6 300	6 700	6 900	**18.0**
20.0				6 000	6 200	5 250	5 650	6 050	5 650	**20.0**
22.0				5 000	5 200	4 200	5 100	5 100	4 700	**22.0**
24.0					4 400	3 400	4 550	4 300	3 850	**24.0**
26.0					3 700	2 700	3 900	3 600	3 150	**26.0**
28.0						2 100	2 800	3 050	2 600	**28.0**
30.0						1 600	2 400	2 550	2 100	**30.0**
32.0								2 100	1 700	**32.0**
34.0								1 750	1 300	**34.0**
36.0									1 000	**36.0**
38.0									700	**38.0**

* Over Front Only

This information is not for crane operation. Operator must refer to the in−cab information for crane operation. Rated lifting capacities shown on fully extended outriggers do not exceed 75% of the tipping loads and on tires do not exceed 65% of the tipping loads.

Courtesy of CraneMarket.com

Fly Attachment Lift Capacity Charts — 75% Metric — Optional

8.8t Counterweight (19,200lbs) — Fully Extended Outriggers — 360° Rotation
(All Capacities Are Listed In Kilograms)

43.28m Main Boom Length

Radius (m)	10.7 m Fly Length				17.7 m Fly Length				Radius (m)
	0°	15°	30°	45°	0°	15°	30°	45°	
12.0	4 950								**12.0**
14.0	4 950				3 300				**14.0**
16.0	4 950	5 150			3 300				**16.0**
18.0	4 950	5 150	5 200		3 300				**18.0**
20.0	4 950	5 150	5 100	4 600	3 300	3 450			**20.0**
22.0	4 800	4 900	4 750	4 500	3 300	3 350			**22.0**
24.0	3 950	4 350	4 350	4 300	3 300	3 300	2 850		**24.0**
26.0	3 250	3 600	3 900	3 950	3 300	3 200	2 800	2 500	**26.0**
28.0	2 700	3 000	3 250	3 400	2 950	3 100	2 700	2 450	**28.0**
30.0	2 200	2 450	2 700	2 850	2 450	2 900	2 650	2 350	**30.0**
32.0	1 750	2 000	2 200	2 350	2 000	2 400	2 550	2 300	**32.0**
34.0	1 400	1 600	1 800	1 900	1 650	2 000	2 300	2 300	**34.0**
36.0	1 100	1 250	1 400	1 500	1 300	1 650	1 950	2 150	**36.0**
38.0	800	950	1 100	1 150	1 050	1 350	1 600	1 750	**38.0**
40.0	550	700	800	850	800	1 050	1 300	1 450	**40.0**
42.0		450	550		550	800	1 000	1 100	**42.0**
44.0						550	750	850	**44.0**
46.0							500	600	**46.0**

This information is not for crane operation. Operator must refer to the in−cab information for crane operation. Rated lifting capacities shown on fully extended outriggers do not exceed 75% of the tipping loads and on tires do not exceed 65% of the tipping loads.

Courtesy of CraneMarket.com

Main Boom Lift Capacity Charts — On Tires — 75% — Metric

8.8t Counterweight (19,200lbs) — On Tires — Stationary — Boom Centered Over Front Between Tire Tracks
(All Capacities Are Listed In Kilograms)

Radius (m)	Boom Length (m)					Radius (m)
	11.58	15.24	19.51−19.81	24.38	28.96	
3.0	32 550					**3.0**
3.5	29 300	20 850				**3.5**
4.0	26 600	20 850				**4.0**
4.5	24 350	20 850	16 550			**4.5**
5.0	22 350	20 850	16 550			**5.0**
6.0	19 150	19 900	16 550	10 700		**6.0**
7.0	16 650	17 400	16 550	10 700		**7.0**
8.0	14 550	15 350	15 850	10 700		**8.0**
9.0	12 250	13 250	13 850	10 700	8 750	**9.0**
10.0		11 000	11 600	10 700	8 750	**10.0**
12.0		7 900	8 500	8 800	8 750	**12.0**
14.0			6 450	6 800	7 000	**14.0**
16.0			5 000	5 300	5 550	**16.0**
18.0				4 200	4 450	**18.0**
20.0				3 400	3 600	**20.0**
22.0				2 700	2 900	**22.0**
24.0					2 350	**24.0**
26.0					1 900	**26.0**

8.8t Counterweight (19,200lbs) — On Tires —Pick & Carry (Creep) Boom Centered Over Front
(All Capacities Are Listed In Kilograms)

Radius (m)	Boom Length (m)					Radius (m)
	11.58	15.24	19.51−19.81	24.38	28.96	
3.0	31 350					**3.0**
3.5	28 100	20 850				**3.5**
4.0	25 300	20 850				**4.0**
4.5	22 950	20 850	16 550			**4.5**
5.0	20 900	20 850	16 550			**5.0**
6.0	17 600	18 300	16 550	10 700		**6.0**
7.0	14 950	15 700	16 200	10 700		**7.0**
8.0	12 900	13 650	14 150	10 700		**8.0**
9.0	11 150	11 950	12 450	10 700	8 750	**9.0**
10.0		10 500	11 050	10 700	8 750	**10.0**
12.0		7 900	8 500	8 800	8 750	**12.0**
14.0			6 450	6 800	7 000	**14.0**
16.0			5 000	5 300	5 550	**16.0**
18.0				4 200	4 450	**18.0**
20.0				3 400	3 600	**20.0**
22.0				2 700	2 900	**22.0**
24.0					2 350	**24.0**
26.0					1 900	**26.0**

This information is not for crane operation. Operator must refer to the in−cab information for crane operation. Rated lifting capacities shown on fully extended outriggers do not exceed 75% of the tipping loads and on tires do not exceed 65% of the tipping loads.

Courtesy of CraneMarket.com

8.8t Counterweight (19,200lbs) — On Tires — Pick And Carry — 4 km/h (2.5mph) Boom Centered Over Front
(All Capacities Are Listed In Kilograms)

Radius (m)	Boom Length (m)					Radius (m)
	11.58	15.24	19.51−19.81	24.38	28.96	
3.0	19 500					**3.0**
3.5	17 250	17 800				**3.5**
4.0	15 350	16 000				**4.0**
4.5	13 800	14 450	14 800			**4.5**
5.0	12 400	13 050	13 500			**5.0**
6.0	10 100	10 800	11 300	10 700		**6.0**
7.0	8 300	9 050	9 550	9 850		**7.0**
8.0	6 900	7 600	8 150	8 450		**8.0**
9.0	5 700	6 500	7 000	7 300	7 500	**9.0**
10.0		5 500	6 050	6 350	6 600	**10.0**
12.0		3 950	4 500	4 850	5 050	**12.0**
14.0			3 350	3 700	3 950	**14.0**
16.0			2 450	2 800	3 050	**16.0**
18.0				2 100	2 350	**18.0**
20.0				1 500	1 750	**20.0**
22.0				1 050	1 250	**22.0**
24.0					850	**24.0**
26.0					500	**26.0**

8.8t Counterweight (19,200lbs) — On Tires — Stationary — 360° Rotation
(All Capacities Are Listed In Kilograms)

Radius (m)	Boom Length (m)					Radius (m)
	11.58	15.24	19.51−19.81	24.38	28.96	
4.5	16 250					**4.5**
5.0	13 600					**5.0**
6.0	9 900	10 800				**6.0**
7.0	7 450	8 300				**7.0**
8.0	5 700	6 550				**8.0**
9.0	4 400	5 200	5 800			**9.0**
10.0		4 200	4 750			**10.0**
12.0		2 650	3 200	3 550		**12.0**
14.0			2 150	2 500	2 700	**14.0**
16.0			1 400	1 700	1 900	**16.0**
18.0				1 100	1 350	**18.0**
20.0				650	850	**20.0**
22.0					500	**22.0**

This information is not for crane operation. Operator must refer to the in−cab information for crane operation. Rated lifting capacities shown on fully extended outriggers do not exceed 75% of the tipping loads and on tires do not exceed 65% of the tipping loads.

Courtesy of CraneMarket.com

Main Boom Lift Capacity Charts — 85% — Metric

8.8t Counterweight (19,200 lbs) — Fully Extended Outriggers — 360° Rotation
(All Capacities Are Listed In Kilograms)

Radius (m)	Boom Length (m)									Radius (m)
	11.58	15.24	19.51−19.81	24.38	28.96	33.53	35.36	38.1	43.28	
2.5	80 000*									**2.5**
3.0	63 500	43 850	27 650							**3.0**
3.5	58 400	43 850	27 650							**3.5**
4.0	53 550	43 850	27 650	20 400						**4.0**
4.5	49 400	43 850	27 650	20 400						**4.5**
5.0	45 800	43 850	27 650	20 400	20 400					**5.0**
6.0	39 800	39 450	27 650	20 400	20 400	18 100				**6.0**
7.0	33 350	32 950	27 650	20 400	20 400	18 100				**7.0**
8.0	28 450	28 050	25 150	20 400	19 850	17 950	12 050	12 800		**8.0**
9.0	24 550	24 250	23 000	20 150	18 200	16 550	11 150	12 800	9 150	**9.0**
10.0		20 850	20 500	18 500	16 750	15 250	10 350	12 800	9 150	**10.0**
12.0		15 550	16 250	15 700	14 400	13 200	9 000	11 700	9 150	**12.0**
14.0			12 400	12 750	11 350	11 500	7 950	10 500	9 000	**14.0**
16.0			9 750	10 100	8 800	9 150	7 050	9 450	8 100	**16.0**
18.0				8 250	7 600	7 300	6 300	7 550	7 250	**18.0**
20.0				6 800	6 900	5 950	5 650	6 200	6 450	**20.0**
22.0				5 650	5 900	4 850	5 100	5 500	5 350	**22.0**
24.0					5 000	4 000	4 650	4 900	4 450	**24.0**
26.0					4 250	3 250	4 250	4 150	3 700	**26.0**
28.0						2 650	3 850	3 550	3 100	**28.0**
30.0						2 100	3 300	3 000	2 600	**30.0**
32.0							2 850	2 550	2 150	**32.0**
34.0								2 150	1 750	**34.0**
36.0									1 400	**36.0**
38.0									1 100	**38.0**
40.0									850	**40.0**

* Over Front Only

This information is not for crane operation. Operator must refer to the in−cab information for crane operation. Rated lifting capacities shown on fully extended outriggers do not exceed 75% of the tipping loads and on tires do not exceed 65% of the tipping loads.

Courtesy of CraneMarket.com

Fly Attachment Lift Capacity Charts — 85% Metric — Optional

8.8t Counterweight (19,200lbs) — Fully Extended Outriggers — 360° Rotation
(All Capacities Are Listed In Kilograms)

43.28m Main Boom Length									
Radius (m)	10.7 m Fly Length				17.7 m Fly Length				Radius (m)
	0°	15°	30°	45°	0°	15°	30°	45°	
12.0	4 950								**12.0**
14.0	4 950				3 300				**14.0**
16.0	4 950	5 150			3 300				**16.0**
18.0	4 950	5 150	5 200		3 300				**18.0**
20.0	4 950	5 150	5 100	4 600	3 300	3 450			**20.0**
22.0	4 950	4 900	4 750	4 500	3 300	3 350			**22.0**
24.0	4 550	4 450	4 350	4 300	3 300	3 300	2 850		**24.0**
26.0	3 850	4 100	4 000	3 950	3 300	3 200	2 800	2 500	**26.0**
28.0	3 200	3 500	3 700	3 650	3 300	3 100	2 700	2 450	**28.0**
30.0	2 700	2 950	3 150	3 350	2 950	3 000	2 650	2 350	**30.0**
32.0	2 250	2 500	2 650	2 800	2 500	2 900	2 550	2 300	**32.0**
34.0	1 850	2 050	2 250	2 350	2 100	2 450	2 500	2 300	**34.0**
36.0	1 500	1 700	1 850	1 950	1 750	2 100	2 350	2 250	**36.0**
38.0	1 200	1 400	1 500	1 550	1 450	1 750	2 000	2 150	**38.0**
40.0	950	1 100	1 200	1 250	1 200	1 450	1 650	1 800	**40.0**
42.0	700	850	900		950	1 150	1 350	1 500	**42.0**
44.0	500	600	650		700	950	1 100	1 20	**44.0**
46.0		400	450		500	700	850	950	**46.0**
48.0						500	650	700	**48.0**
50.0							400		**50.0**

This information is not for crane operation. Operator must refer to the in−cab information for crane operation. Rated lifting capacities shown on fully extended outriggers do not exceed 75% of the tipping loads and on tires do not exceed 65% of the tipping loads.

Courtesy of CraneMarket.com

This Page Intentionally Blank

Courtesy of CraneMarket.com

This Page Intentionally Blank

Courtesy of CraneMarket.com

Link−Belt Cranes Lexington, Kentucky www.linkbelt.com

®Link−Belt is a registered trademark. Copyright 2023. We are constantly improving our products and therefore reserve the right to change designs and specifications.

Courtesy of CraneMarket.com