# Technical Data

## Specifications & Capacities

# 100 RT

Telescopic Boom Rough Terrain Crane
**100 US ton**
**90.7 metric ton**

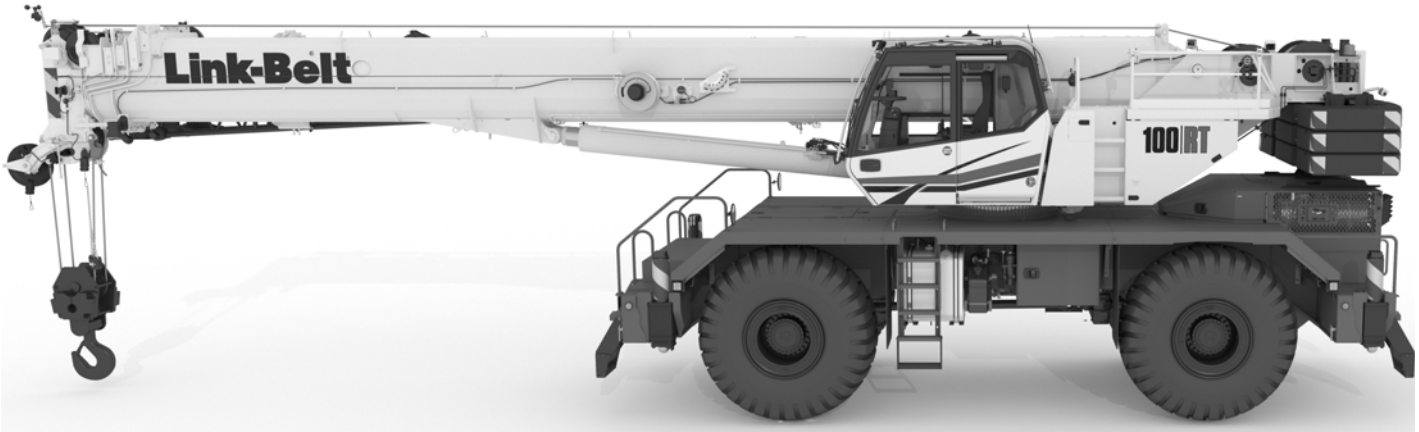


**CAUTION:** This material is supplied for reference use only. Operator must refer to in- cab Crane Rating Manual and Operator's Manual to determine allowable crane lifting capacities and assembly and operating procedures.



*Courtesy of CraneMarket.com*

Courtesy of CraneMarket.com

# Table Of Contents

**Boom, Attachments, and Upper Structure** . . . . . **1**
Boom . . . . . 1
Boom . . . . . 1
Boom Wear Pads . . . . . 1
Boom Head . . . . . 1
Boom Elevation . . . . . 1
Auxiliary Lifting Sheave . . . . . 1
Hook Blocks and Balls - Optional . . . . . 1
Fly - Optional . . . . . 1
Fly Extensions - Optional . . . . . 1
Fly Controls . . . . . 1
Operator's Cab and Controls . . . . . 1
Swing . . . . . 3
Electrical . . . . . 3
Load Hoist System . . . . . 3
Load Hoist Performance . . . . . 3
Main and Auxiliary Winches . . . . . 3
Hydraulic System . . . . . 3
Counterweight . . . . . 3
**Carrier** . . . . . **4**
General . . . . . 4
Outriggers . . . . . 4
Steering and Axles . . . . . 4
Suspension . . . . . 4
Tires and Wheels . . . . . 4
Brakes . . . . . 4
Electrical . . . . . 4
Engine . . . . . 4
Transmission . . . . . 4
Fuel Tank . . . . . 5
Hydraulic System . . . . . 5
Pump Drive . . . . . 5
Maximum Speed . . . . . 5
Paint . . . . . 5
Additional Equipment Options . . . . . 5
Gradeability . . . . . 5
**Axle Loads** . . . . . **5**
**General Dimensions** . . . . . **6**
**Working Range Diagram** . . . . . **7**
Main Boom + Fly . . . . . 7
**Boom Extend Modes** . . . . . **8**
**Main Boom Lift Capacity Charts - Imperial** . . . . . **9**
28,800 lb Counterweight - Fully Extended Outriggers - 360° Rotation . . . . . 9
**Fly Attachment Lift Capacity Charts - Optional** . . . . . **10**
28,800 lb Counterweight - Fully Extended Outriggers - 360° Rotation . . . . . 10
155 ft Main Boom Length . . . . . 10



Courtesy of CraneMarket.com

**Main Boom Lift Capacity Charts - On Tires** . . . . . **11**
28,800 lb Counterweight - On Tires - Stationary - Boom Centered Over Front Between Tire Tracks 11
28,800 lb Counterweight - On Tires - Pick & Carry (Creep) - Boom Centered Over Front . . . . . 12
28,800 lb Counterweight - On Tires - Pick & Carry (2.5 mph) - Boom Centered Over Front . . . . . 13
**Main Boom Lift Capacity Charts - 85% - Metric** . . . . . **14**
13.2t Counterweight - Fully Extended Outriggers - 360° Rotation . . . . . 14
**Fly Attachment Lift Capacity Charts - Optional** . . . . . **15**
13.2t Counterweight - Fully Extended Outriggers - 360° Rotation . . . . . 15
47.24m Main Boom Length . . . . . 15
**Main Boom Lift Capacity Charts - On Tires** . . . . . **16**
13.2t Counterweight - On Tires - Stationary - Boom Centered Over Front Between Tire Tracks . . . . 16
13.2t Counterweight - On Tires - Pick & Carry (Creep) - Boom Centered Over Front . . . . . 17



*Courtesy of CraneMarket.com*

# Boom, Attachments, and Upper Structure

## ■ Boom

**Design** - Five section, formed construction of extra high tensile steel consisting of one base section and four telescoping sections.

### Boom

- 40.6- 155 ft (*12.3- 47.2m*) five section full power boom
- Two boom extend modes (EM1 and EM2), controlled from the operator's cab, provide superior capacities by varying the extension of the telescoping sections. EM1 mode extends sections T2, T3, and T4 proportionally to a 126.4 ft (*38.5m*) boom length. Next section T1 extends to reach full 155 ft (*47.2m*) boom length. EM2 mode extends the T1 section to reach a 69.2 ft (*21.1m*) boom length. Next sections T2, T3, and T4 extend proportionally to reach the full 155 ft (*47.2m*) boom length.
- Mechanical boom angle indicator
- Maximum tip height is 164.6 ft *(50.2m).*

### Boom Wear Pads

- Wear pads with Teflon inserts that self- lubricate the boom sections
- Bottom wear pads are universal for all boom sections
- Top wear pads are universal for all boom sections

### Boom Head

- Five 16.5 in (*41.9cm*) root diameter nylon sheaves to handle up to ten parts of line
- Easily removable wire rope guards
- Rope dead end lugs on each side of the boom head
- Boom head is designed for quick- reeve of the hook block
- Wind speed indicator
- Aviation obstruction solar marking light and flag - optional

### Boom Elevation

- One double acting hydraulic cylinder with integral holding valve
- Boom elevation: - 2.6° to 80°

### Auxiliary Lifting Sheave

- Single 16.5 in (*41.9cm*) root diameter nylon sheave
- Easily removable wire rope guards
- Does not affect erection of the fly or use of the main head sheaves

### Hook Blocks and Balls - Optional

- 27 ton (*25mt*) 1 sheave quick- reeve hook block with safety latch
- 60 ton (*55mt*) 3 sheave quick- reeve hook block with safety latch
- 88 ton (*80mt*) 5 sheave quick- reeve hook block with safety latch
- 110 ton (*100mt*) 6 sheave quick- reeve hook block with safety latch
- 10 ton (*9.1mt*) swivel and non- swivel hook balls with safety latch

### Fly - Optional

- 35- 58 ft (*10.7- 17.7m*) two piece bi- fold lattice fly, stowable, offsettable to 0°, 15°, 30°, and 45°. Maximum tip height is 221.4 ft (*67.5m*).

### Fly Extensions - Optional

- One 16 ft (*4.9m*) lattice extension, to be mounted between the boom head and fly options. Maximum tip height is 237 ft (*72.3m*).

### Fly Controls

- One man assembly, minimizing ladder climbs
- Control box with fly assist and boom hoist cylinder switches located on front frame
- Sure- lock system prevents fly from ever being completely unpinned during assembly
- Speed screws for boom head and pivot point

## ■ Operator's Cab and Controls

**Environmental Cab** - Fully enclosed, one person cab of tubular and sheet steel structure with formed plastic interior panels.

Equipped with:

- Tinted and tempered glass windows
- Extra- large fixed front window with time delayed windshield wiper and washer
- Swing up roof window with windshield wiper and washer
- Sliding left side door with large fixed window
- Sliding right side window and pop- out rear window for ventilation
- Six way adjustable, cushioned seat with seat belt and two storage compartments
- Diesel fired warm- water heater with ten air ducts for front windshield defroster and cab floor
- Air Conditioning - Integral with cab heating system utilizing the same ventilation outlets and automatic temperature control (ATC)
- Adjustable sun screen
- Dome lights with red nighttime reading LED's
- Cup holder
- Fire extinguisher
- Two position travel swing lock
- AM/FM radio
- Tilting cab (0° - 20°)



Courtesy of CraneMarket.com

**Engine Dependent Warm- Water Heater** - Optional - With air ducts for front windshield defroster and cab floor

**Steering Column** - Pedestal type with dual tilting functions for operator comfort. Column includes the following controls and indicators:

- Horn button
- Turn signal switch
- Driving light switch
- Transmission gear selector
- Transmission direction switches
- Travel park brake
- 2/4 wheel drive/range selector
- Hazard flasher

**Armrest Controls** - Two dual axis electronic joystick controllers or optional single axis electronic controllers for:

- Swing
- Boom hoist
- Main (rear) winch
- Auxiliary (front) winch
- Winch high/low speed switch(es)
- Warning horn button
- Swing park brake switch
- Engine throttle lock switch
- Engine set/resume switch
- Cab tilt
- Telescope override

**Outrigger Controls** - Hand held control box with umbilical cord gives the operator the freedom to view operation while setting the outriggers.

**Foot Controls**

- Boom telescope
- Swing brake
- Service brake
- Engine throttle

**Upper Right Console** - Controls and indicators for:

- Engine ignition
- Engine stop
- Function lockout
- Front windshield wiper and washer
- Cab lights and upper frame lights
- Horn
- Dome light with switch
- E- stop switch
- Radio
- DRI on/off selection
- HVAC controller
- Boom floodlights
- Rotating beacon/Strobe light
- Top hatch wiper washer
- Winch(es) disable
- Engine indicator gauge
- 360° swing lock - optional

**Internal RCL Light Bar** - Visually informs the operator when crane is approaching maximum load capacity with a series of green, yellow, and red lights.

**Integrated Third Wrap Function Kickout** - Link-Belt Pulse 2.0 color display visually and audibly warns the operator when the wire rope is on the first/bottom layer and provides a function kickout when the wire rope is down to the last three wraps.

**External RCL Light Bar** - **Optional** - Visually informs the ground crew when crane is approaching maximum load capacity with a series of green, yellow, and red lights.

**Rear Right Side Panel**

- 12V accessory outlet (10amp)
- USB charge port

**Camera Display** - Located on the right A- post with an adjustable mount

- Displays right side of upper
- Displays main and auxiliary winches
- Displays rear view

**Diagnostic Center** - Located on the right rear wall behind the seat.

- Engine diagnostic
- RCL CANBUS diagnostic
- Master controller CANBUS diagnostic

**Fuse & Relay Panel** - Located on the left rear wall behind the seat.

**Link-Belt Pulse 2.0** - The Link-Belt in-house designed, total crane operating system that utilizes a 10 in touch screen color display with integrated RCL and engine data, advanced diagnostics and systems monitoring, Wi–Fi capable for remote software updates, operator customizable, and a readout and operator interface for the following systems:

- **Rated capacity limiter** – LCD graphic audio – visual warning system integrated into the dash with anti – two block and function limiter. Operating data includes:
  - RCL controller USB diagnostic
  - Crane configuration
  - Boom length and angle
  - Boom head height
  - Allowed load and % of allowed load
  - RCL light bar
  - Boom angle
  - Radius of load
  - Actual load
  - Wind speed
  - Highlighted unit of measurement on working screen
  - Telescope operation displayed in real time
  - Steer mode selector
  - Outrigger position sensing
  - Drum Rotation direction indication
  - Third wrap indicator - optional
  - Diagnostics
  - Operator settable alarms with function kickout (include):
    - Maximum and minimum boom angles
    - Maximum tip height
    - Maximum boom length
    - Swing left/right positions
    - Operator defined area (imaginary plane)
- **Cab Instrumentation**
  - Speedomemter
  - Tachometer
  - Engine water temperature
  - Fuel level
  - Hydraulic oil temperature
  - Stop engine
  - Check engine
  - Wait to start
  - Transmission oil temperature
  - Diesel exhaust fluid (DEF) level(1)
  - Engine air filter high restriction light
  - Regeneration light(1)
  - Regeneration inhibit switch(1)
  - Regeneration initiate switch(1)
  - High exhaust temperature light(1)
  - Regeneration disabled light(1)
  - Swing park brake light
  - Engine speed
  - Engine oil pressure light
  - Battery voltage
  - Fuel rate (gal/hr)
  - Engine load
  - Engine Diagnostics

  (1) (Stage V/Tier 4F engine only)
- **Telematics** - Cellular based data logging and monitoring system that provides:
  - Location and operational settings
  - Routine maintenance
  - Crane and engine monitoring
  - Diagnostic and fault codes



Courtesy of CraneMarket.com

## ■ Swing

**Motor/Planetary** - Bi- directional hydraulic swing motor mounted to a planetary reducer for 360° continuous smooth swing at 1.9 rpm

**Swing Park Brake** - 360°, electric over hydraulic, (spring applied/hydraulic released) multi- disc brake mounted on the speed reducer. Operated by a switch from the operator's cab.

**Swing Brake** - 360°, foot operated, speed reducing system with disc brake hold feature

**Swing Lock** - Two- position swing lock (boom over front or rear) operated from the operator's cab.

**360° Positive Swing Lock** - Optional - Meets New York City requirement

## ■ Electrical

**Swing Alarm** - Audio/video warning device signals when the upper is swinging.

**Lights**

- Two LED working lights on front of the cab
- Two amber strobe lights at rear of the upper frame
- LED Boom floodlight - Dual
- LED Frame work lights - right front, left rear, and work platform
- One LED working light on top of cab - optional
- Boom floodlight - High intensity remote controlled - optional
- LED electrical compartment

## ■ Load Hoist System

### Load Hoist Performance

| Main (Rear) and Auxiliary (Front) Winches - 3/4 in (*19mm*) Rope | | | | | | | | | | |
|---|---|---|---|---|---|---|---|---|---|---|
| | Maximum Line Pull | | Normal Line Speed | | High Line Speed | | Layer | | Total | |
| Layer | lb | *kN* | ft/min | *m/min* | ft/min | *m/min* | ft | *m* | ft | *m* |
| 1 | 23,632 | *105.12* | 150 | *45.7* | 241 | *73.5* | 115 | *35.1* | 115 | *35.1* |
| 2 | 21,616 | *96.15* | 164 | *50.0* | 264 | *80.5* | 125 | *38.1* | 240 | *73.2* |
| 3 | 19,917 | *88.60* | 178 | *54.3* | 286 | *87.2* | 136 | *41.5* | 376 | *114.6* |
| 4 | 18,465 | *82.14* | 192 | *58.5* | 309 | *94.2* | 147 | *44.5* | 522 | *159.1* |
| 5 | 17,211 | *76.56* | 206 | *62.8* | 331 | *100.9* | 157 | *47.9* | 679 | *207.0* |
| 6 | 16,116 | *71.69* | 220 | *67.1* | 354 | *107.9* | 168 | *51.2* | 847 | *258.2* |

| Wire Rope Application | | in | *mm* | Type | lb | *kg* |
|---|---|---|---|---|---|---|
| Main (Rear) Winch | Standard | 3/4 | *19* | 37x7 rotation resistant - right lang lay (Type KC) | 16,000 | *7 257.5* |
| | Optional | 3/4 | *19* | 35x7 rotation resistant - right lang lay (Type CC) | 17,160 | *7 783.6* |
| Auxiliary (Front) Winch | Standard | 3/4 | *19* | 37x7 rotation resistant - right lang lay (Type KC) | 16,000 | *7 257.5* |
| | Optional | 3/4 | *19* | 35x7 rotation resistant - right lang lay (Type CC) | 17,160 | *7 783.6* |

### Main and Auxiliary Winches

- Axial piston (2- speed) motors driven through planetary reduction unit for positive control under all load conditions.
- Grooved lagging
- Power up/down mode of operation
- Hoist drum cable follower
- Drum rotation indicator
- Drum diameter: 15 in (*38.1cm*)
- Rope length:
  - Main: 850 ft (*259m*)
  - Auxiliary: 600 ft (*182.9m*)
- Maximum rope storage: 850 ft (*259m*)
- Terminator style socket and wedge

## ■ Hydraulic System

**Counterbalance Valves** - All hoist motors, boom extend cylinders, and boom hoist cylinders are equipped with counterbalance valves to provide load lowering and prevents accidental load drop when hydraulic power is suddenly reduced.

## ■ Counterweight

**Standard** - Total of 28,800 lb (*13.2t*) counterweight consisting of three counterweight slabs pinned to the upper with capacities for:

- 0 lb (*0t*) counterweight
- 9,600 lb (*4.4t*) counterweight
- 19,200 lb (*8.8t*) counterweight
- 28,800 lb (*13.2t*) counterweight

Hydraulic counterweight removal activated by upper frame mounted toggle switch.



Courtesy of CraneMarket.com

# Carrier

## General

- 10 ft 11 in (*3.33m*) wide
- 14 ft 4 in (*4.37m*) wheelbase (centerline of first axle to centerline of second axle)

**Frame** - Box- type, torsion resistant, welded construction made of high tensile steel. Equipped with front and rear towing and tie- down lugs, tow connections, and access ladders.

- Six points of access
- Flat deck
- Three lockable storage boxes

**Pintle Hooks** - Optional - Front and rear available

## Outriggers

**Boxes** - Two double box, front and rear welded to carrier frame

**Beams and Jacks** - Four single stage beams that are hydraulically controlled from the operator's cab with integral check valves.

**V- CALC** - Variable confined area lifting capabilities that are incorporated directly into the Pulse 2.0 display allowing multiple outrigger configurations of fully extended, intermediate, and fully retracted, with live on screen working radii, utilizing 360° charts, and swing arrest.

**Pontoons** - Four lightweight, serviceable, quick release, 24 in diameter (*60.96cm*), steel pontoons with contact area of 452 $in^2$ (*2 916* $cm^2$) can be stored for road travel in storage racks on the carrier.

**Main Jack Reaction** - 112,600 lb (*51 074kg*) force and 249 psi (*1 216kPa*) ground bearing pressure.

## Steering and Axles

**Steering** - Four independent modes consisting of two wheel front, two wheel rear, four wheel, and crab. Each mode is controlled from the Pulse 2.0 display.

**Drive** - Two modes: 4 x 2 and 4 x 4 for off highway travel

**Axle 1** - Steered, non- driven for 4 x 2 and steered, driven for 4 x 4

**Axle 2** - Steered, driven

**Emergency Steer System** - Optional

## Suspension

**Front** - Rigid mount to the carrier frame

**Rear** - The rear axle is suspended on the oscillation cylinders with motion of the axle controlled by a four bar greaseless linkage system. The oscillation cylinders lockout when the upper structure rotates 2.5° past centerline.

**Hydro- gas Rear Suspension** - Optional

**Ride Height Adjustment** - Suspension can be lowered for transport using a carrier mounted toggle switch from ground level.

## Tires and Wheels

**Front and Rear** - Four (single) 29.5 x 25- 34 ply rating, earthmover type tires on steel disc wheels

- Spare tires and wheels - optional

## Brakes

**Service** - Full hydraulic, dual circuit, disc type brakes on all wheel ends

**Parking/Emergency** - Spring applied type, acting on front axle

## Electrical

Two batteries provide 24 volt starting and operation

**Lights (LED)**

- All lights are LED.
- Front lighting includes two main headlights and two parking/directional indicators.
- Side lighting includes outrigger lights and two parking/directional indicators per side.
- Rear lighting includes two directional indicators, two parking/brake lights, and two reversing lights.
- Electrical and battery compartment lights.

## Engine

| Specification | Cummins QSB | |
|---|---|---|
| Emissions Compliance Level: | Stage V/Tier 4F(1) | Tier 3/Stage IIIA(2) |
| Numbers of Cylinders | 6 | 6 |
| Cycle | 4 | 4 |
| Bore and Stroke: inch (*mm*) | 4.21 x 4.88 (*107 x 124*) | 4.21 x 4.88 (*107 x 124*) |
| Piston Displacement: $in^3$ (*L*) | 408 (*6.7*) | 408 (*6.7*) |
| Max. Brake Horsepower: hp (*kW*) | 232 (*173*) @ 2,000 rpm | 240 (*179*) @ 2,000 rpm |
| Peak Torque: ft lb (*Nm*) | 700 (*949*) @ 1,500 rpm | 728 (*987*) @ 1,500 rpm |
| Electric/starting systems: volts | 24/24 | 24/24 |
| Alternator: amps | 140 | 140 |
| Crankcase Capacity: qt (*L*) | 15 (*14.2*) | 15 (*14.2*) |

- Water/fuel separator w/ heater and water in fuel (WIF) sensor
- 120- volt block heater - Stage V/Tier 4F
- 220- volt block heater - Tier 3/Stage IIIA
- Grid heater - 112 amp
- Mechanically driven, variable speed, engine controlled, viscous fan clutch
- (1) Can only be sold and/or operated where Stage V/Tier 4F off- highway emission standards are accepted.
- (2) Can only be sold and/or operated where Tier 3/Stage IIIA off- highway emission standards are accepted.

## Transmission

**Powershift** - Three speed with high/low range for 6 forward and 6 reverse gears. Front axle disconnect for two or four wheel drive. Front axle disconnects in high range.



Courtesy of CraneMarket.com

## Fuel Tank

One 75 gallon (*283.9L*) capacity tank

**Diesel Exhaust Fluid (DEF) tank**

- One 10 gal (*37.9L*) capacity tank

## Hydraulic System

All functions are hydraulically powered allowing positive precise control with independent or simultaneous operation of all functions.

**Main Pumps**

- Two variable displacement, load sense, piston pumps with anti- stall for the boom hoist, boom extend, front winch and rear winch.
- One three section fixed displacement gear pump for the oil cooler, swing, steer, brakes, and outrigger.
- Combined pump capacity of 128 gpm (*484.5Lpm*)

**Hydraulic Reservoir** - 183 gal (*692.7L*) capacity equipped with sight level gauge. Diffusers built in for deaeration.

**Filtration** - One 5 micron, full flow return line filter. Accessible for easy filter replacement.

**Hydraulic Oil Coolers** - One carrier mounted cooler removes heat from the hydraulic oil. Remote mounted on right side of the carrier.

## Pump Drive

All pumps are mechanically driven by the diesel engine.

## Maximum Speed

15 mph (*24.14 km/h*)

## Paint

Entire machine is pre-painted and oven baked with Highsolid Paint (2 part epoxy/polyester) and/or (2 part epoxy primer/2 part polyurethane top coat). Standard Link-Belt Red, Link-Belt Gray, and Gloss Black colors apply.

## Additional Equipment Options

- Spark arrestor (export only)
- Engine air intake shutoff valve
- Cold weather package (domestic only)
- Arctic weather package (domestic only)
- Filter kits

## Gradeability

| Counterweight | Ascending | | Descending | | Side | |
|---|---|---|---|---|---|---|
| | Degrees | % Grade | Degrees | % Grade | Degrees | % Grade |
| 0 | 17.0 | 31% | 2.0 | 3% | 3.0 | 5% |
| 9,600 lb (*4.4t*) | 15.0 | 27% | 12.0 | 21% | | |
| 19,200 lb (*8.8t*) | 14.0 | 25% | 14.0 | 25% | | |
| 28,800 lb (*13.2t*) | 13.0 | 23% | 13.0 | 23% | | |

# Axle Loads

| Base Machine<br>Includes: two winches with cable followers, standard wire rope length, full counterweight, dual boom flood lights, auxiliary lifting sheave, two- piece fly, 60t hookblock, and 10t hookball. | | Gross Vehicle Weight (1) | | Front Axles | | Rear Axles | |
|---|---|---|---|---|---|---|---|
| | | lb | *kg* | lb | *kg* | lb | *kg* |
| | Stage V/Tier 4F | 122,257 | *55 455* | 60,134 | *27 277* | 62,123 | *28 179* |
| | Stage 3A/Tier 3 | 122,477 | *55 555* | 60,195 | *27 304* | 62,283 | *28 252* |
| Remove | Full 28,800 lb *(13.2t)* Counterweight | - 29,067 | *- 13 185* | 10,157 | *4 608* | - 39,224 | *- 17 792* |
| | Two- piece Fly | - 2,650 | *- 1 203* | - 4,574 | *- 2 075* | 1,924 | *873* |
| | Auxiliary Lifting Sheave | - 110 | *- 50* | - 324 | *- 147* | 214 | *97* |
| | 60t Hookblock at Bumper | - 1,400 | *- 636* | - 2,124 | *- 964* | 724 | *329* |
| | 10t Hookball and Bumper | - 580 | *- 264* | - 880 | *- 400* | 300 | *137* |

| Tire | Maximum Allowable Axle Load @ 15 mph (*24.1km/h*) |
|---|---|
| 29.5 x 25 (34- PR) | 72,800 lb (*33 021kg*) |

(1) Adjust gross vehicle weight and axle loading according to component weight.
Note: All weights are ±3%.



Courtesy of CraneMarket.com

# General Dimensions

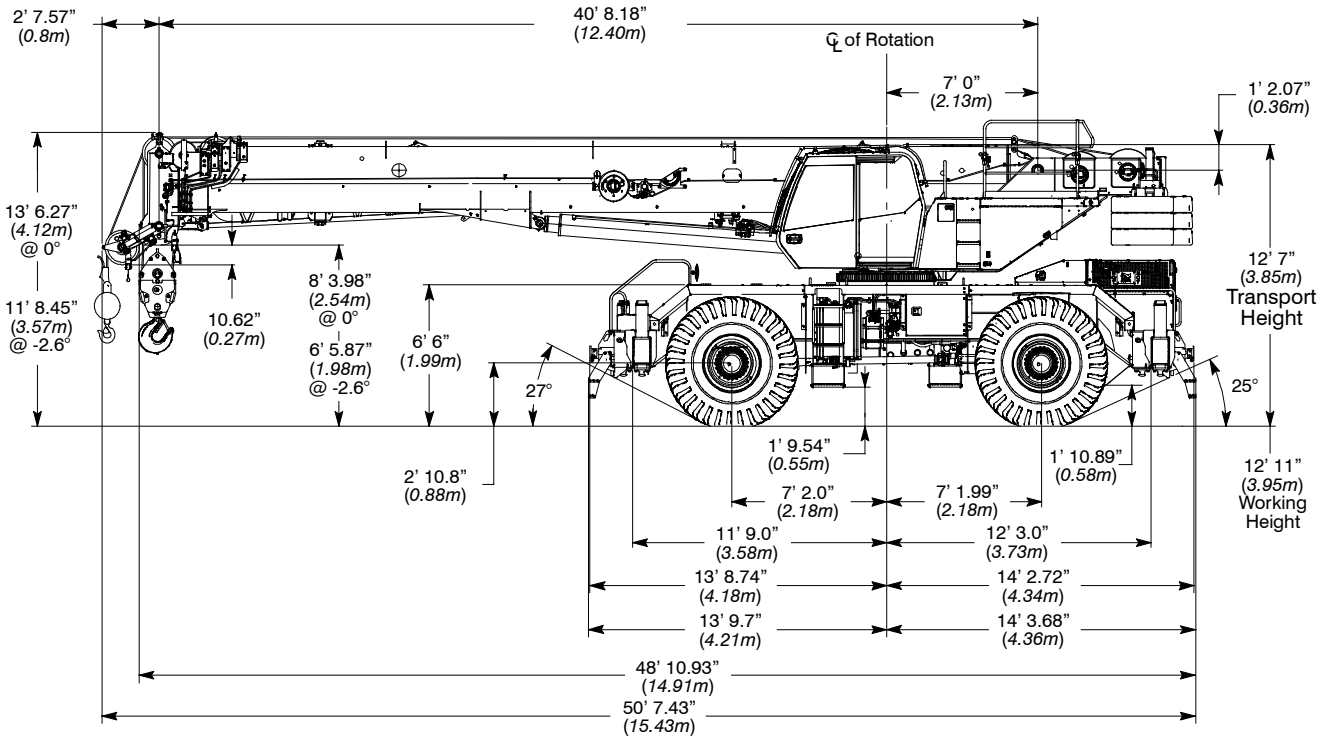


| Turning Radius - Front Wheel (4x2) Steering | English | *Metric* |
|---|---|---|
| Wall to wall over carrier | 46' 10" | *14.30m* |
| Wall to wall over boom attachment | 58' 3" | *17.80m* |
| Curb to curb | 45' 3" | *13.80m* |
| Centerline of tire | 43' 11" | *13.40m* |

| Turning Radius - All Wheel (4x4) Steering | English | *Metric* |
|---|---|---|
| Wall to wall over carrier | 27' 3" | *8.30m* |
| Wall to wall over boom attachment | 40' 11" | *12.50m* |
| Curb to curb | 25' 4" | *7.70m* |
| Centerline of tire | 24' 0" | *7.30m* |

| Tail Swing | English | *Metric* |
|---|---|---|
| With counterweight | 14' 2" | *4.32m* |
| Without counterweight | 13' 0" | *3.96m* |

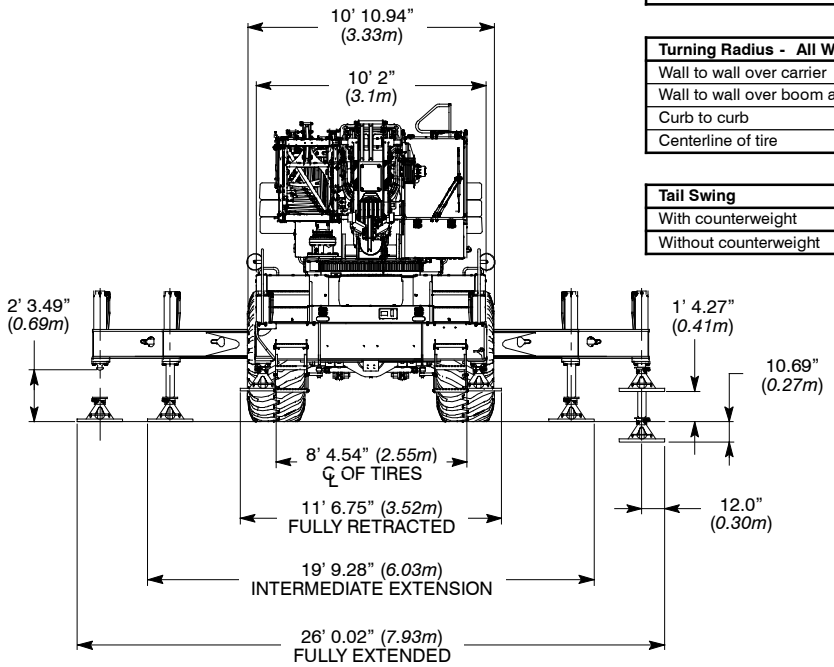


Not To Scale



Courtesy of CraneMarket.com

# Working Range Diagram
## Main Boom + Fly

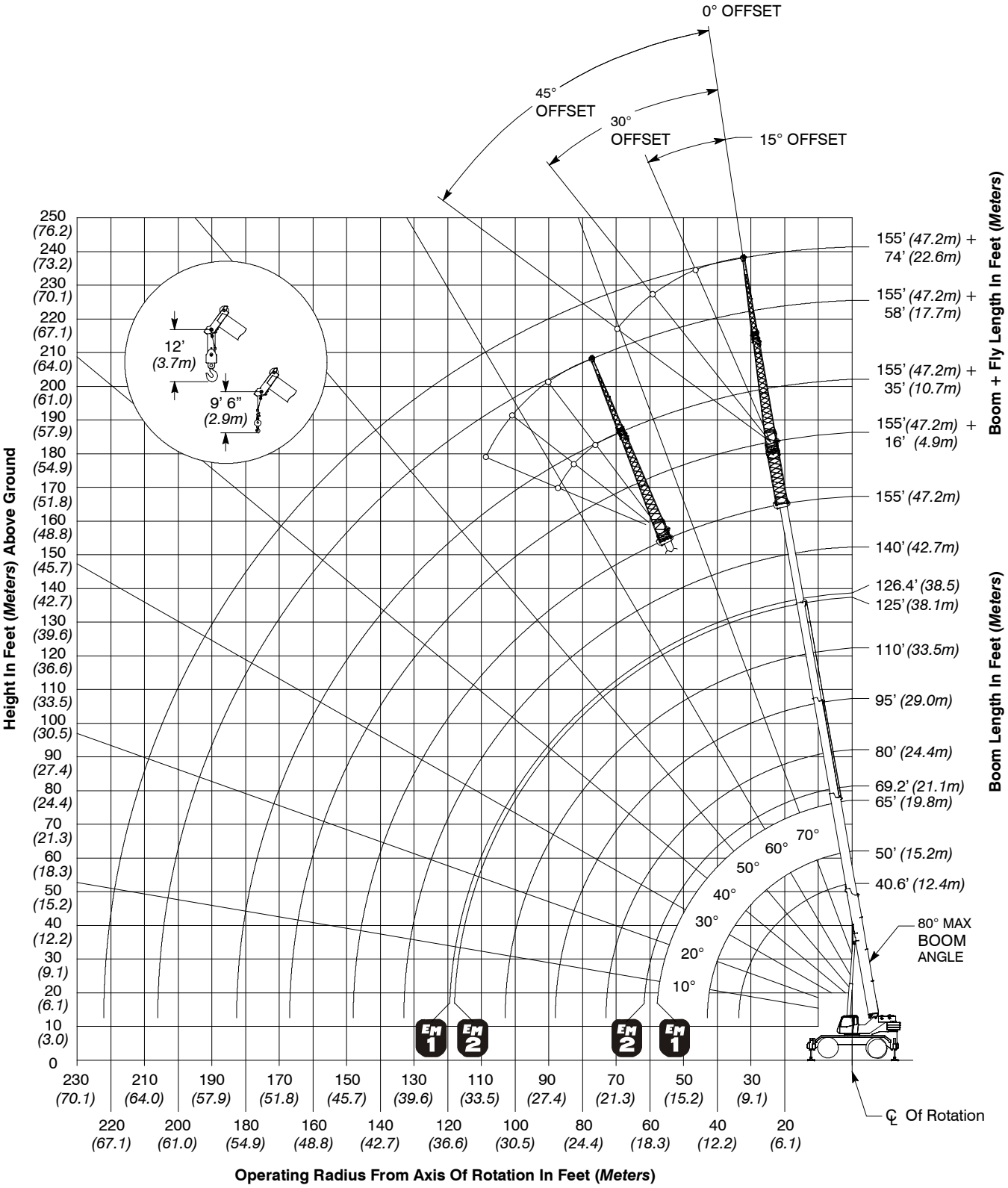




Courtesy of CraneMarket.com

# Boom Extend Modes

| | Boom Length | | Telescope Length | | | |
|---|---|---|---|---|---|---|
| | ft | *m* | T4 | T3 | T2 | T1 |
| * | 40.6 | *12.37* | | | | |
| | 50 | *15.24* | 11% | 11% | 11% | |
| * | 65 | *19.81* | 28% | 28% | 28% | |
| | 80 | *24.38* | 46% | 46% | 46% | |
| * | 95 | *28.96* | 63% | 63% | 63% | |
| | 110 | *33.53* | 81% | 81% | 81% | |
| * | 126.4 | *38.53* | 100% | 100% | 100% | |
| | 140 | *42.67* | 100% | 100% | 100% | 48% |
| * | 155 | *47.24* | 100% | 100% | 100% | 100% |

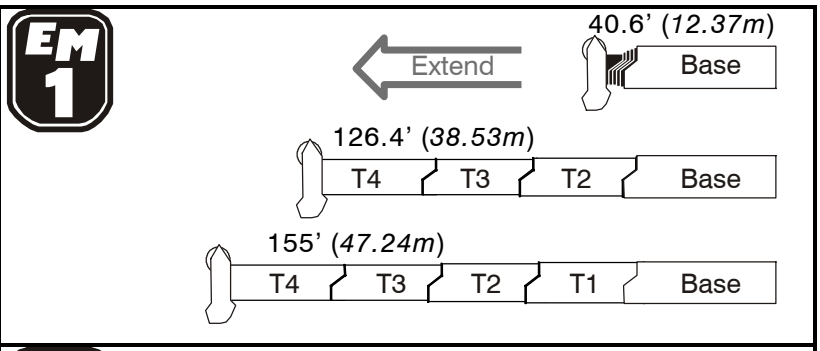


| | Boom | | Telescope Length | | | |
|---|---|---|---|---|---|---|
| | ft | *m* | T4 | T3 | T2 | T1 |
| * | 40.6 | *12.37* | | | | |
| | 50 | *15.24* | | | | 33% |
| * | 69.2 | *21.09* | | | | 100% |
| | 80 | *24.38* | 13% | 13% | 13% | 100% |
| * | 95 | *28.96* | 30% | 30% | 30% | 100% |
| | 110 | *33.53* | 48% | 48% | 48% | 100% |
| * | 125 | *38.10* | 65% | 65% | 65% | 100% |
| | 140 | *42.67* | 83% | 83% | 83% | 100% |
| * | 155 | *47.24* | 100% | 100% | 100% | 100% |

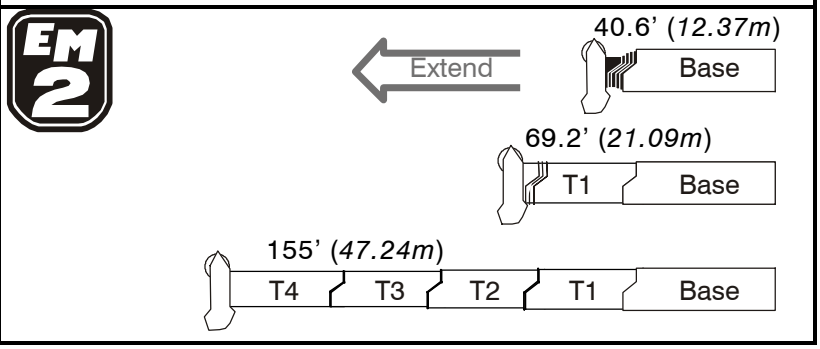


* Denotes boom lengths charted for main boom and fly capacities.



Courtesy of CraneMarket.com

# Main Boom Lift Capacity Charts - Imperial

**28,800 lb Counterweight - Fully Extended Outriggers - 360° Rotation**
**(All Capacities Are Listed In Pounds)**

| Radius (ft) | Boom Length (ft) | | | | | | | | | Radius (ft) |
|---|---|---|---|---|---|---|---|---|---|---|
| | 40.6 | 50.0-50.5 | 65-69.2 | 80 | 95 | 110 | 125-126.4 | 140 | 155 | |
| 8 | 200,000* | | | | | | | | | 8 |
| 10 | 187,400* | | | | | | | | | 10 |
| 10 | 164,100 | 115,000 | 97,000 | | | | | | | 10 |
| 12 | 147,000 | 115,000 | 97,000 | 55,500 | | | | | | 12 |
| 15 | 126,700 | 115,000 | 93,400 | 55,500 | | | | | | 15 |
| 20 | 93,300 | 92,400 | 78,700 | 55,500 | 55,500 | 49,800 | | | | 20 |
| 25 | 72,400 | 71,700 | 67,600 | 55,500 | 53,100 | 45,900 | 35,900 | | | 25 |
| 30 | 58,300 | 57,600 | 56,700 | 55,500 | 47,000 | 40,900 | 35,900 | 26,100 | | 30 |
| 35 | | 49,700 | 51,300 | 52,200 | 42,000 | 36,600 | 32,400 | 26,100 | 19,800 | 35 |
| 40 | | 42,000 | 43,600 | 44,500 | 37,900 | 33,000 | 29,400 | 26,100 | 19,800 | 40 |
| 45 | | | 36,200 | 37,100 | 33,500 | 30,000 | 26,800 | 24,500 | 19,800 | 45 |
| 50 | | | 30,200 | 31,200 | 27,700 | 27,400 | 24,600 | 22,400 | 19,800 | 50 |
| 55 | | | 25,500 | 26,500 | 23,600 | 24,100 | 22,600 | 20,700 | 19,200 | 55 |
| 60 | | | 16,700 | 22,800 | 21,900 | 20,500 | 20,800 | 19,100 | 17,700 | 60 |
| 65 | | | | 19,700 | 20,400 | 17,500 | 18,200 | 17,600 | 16,200 | 65 |
| 70 | | | | 17,200 | 17,900 | 16,200 | 15,700 | 16,200 | 15,100 | 70 |
| 75 | | | | | 15,800 | 15,100 | 13,800 | 14,400 | 14,000 | 75 |
| 80 | | | | | 14,000 | 14,200 | 12,400 | 13,600 | 13,000 | 80 |
| 85 | | | | | 12,500 | 12,900 | 11,600 | 12,300 | 11,400 | 85 |
| 90 | | | | | | 11,500 | 10,900 | 11,000 | 10,100 | 90 |
| 95 | | | | | | 10,300 | 10,200 | 9,800 | 9,000 | 95 |
| 100 | | | | | | 9,300 | 9,600 | 8,800 | 7,900 | 100 |
| 105 | | | | | | | 8,700 | 7,800 | 7,000 | 105 |
| 110 | | | | | | | 7,800 | 7,000 | 6,200 | 110 |
| 115 | | | | | | | 7,100 | 6,200 | 5,400 | 115 |
| 120 | | | | | | | | 5,500 | 4,800 | 120 |
| 125 | | | | | | | | 4,900 | 4,100 | 125 |
| 130 | | | | | | | | 4,300 | 3,600 | 130 |
| 135 | | | | | | | | | 3,000 | 135 |
| 140 | | | | | | | | | 2,600 | 140 |
| 145 | | | | | | | | | 2,100 | 145 |

* Over Front Only With Special Equipment

This information is not for crane operation. Operator must refer to the in- cab information for crane operation. Rated lifting capacities shown on fully extended outriggers do not exceed 85% of the tipping loads and on tires do not exceed 75% of the tipping loads.



Courtesy of CraneMarket.com

# Fly Attachment Lift Capacity Charts - Optional

**28,800 lb Counterweight - Fully Extended Outriggers - 360° Rotation**
**(All Capacities Are Listed In Pounds)**

**155 ft Main Boom Length**

| Radius (ft) | 35 ft Manual Offset Fly | | | | 58 ft Manual Offset Fly | | | | 74 ft Manual Offset Fly | | | | Radius (ft) |
|---|---|---|---|---|---|---|---|---|---|---|---|---|---|
| | 0° | 15° | 30° | 45° | 0° | 15° | 30° | 45° | 0° | 15° | 30° | 45° | |
| 40 | 11,200 | | | | | | | | | | | | 40 |
| 45 | 11,200 | | | | | | | | | | | | 45 |
| 50 | 11,200 | | | | 7,500 | | | | 5,300 | | | | 50 |
| 55 | 11,200 | 11,700 | | | 7,500 | | | | 5,300 | | | | 55 |
| 60 | 11,200 | 11,700 | | | 7,500 | | | | 5,300 | | | | 60 |
| 65 | 11,200 | 11,700 | 11,500 | | 7,500 | | | | 5,300 | | | | 65 |
| 70 | 11,200 | 11,700 | 11,300 | 10,100 | 7,500 | 7,700 | | | 5,300 | 5,300 | | | 70 |
| 75 | 11,200 | 11,700 | 11,100 | 9,900 | 7,500 | 7,600 | | | 5,300 | 5,200 | | | 75 |
| 80 | 11,200 | 11,700 | 10,900 | 9,800 | 7,500 | 7,400 | 6,400 | | 5,300 | 5,100 | | | 80 |
| 85 | 11,100 | 11,100 | 10,600 | 9,600 | 7,500 | 7,300 | 6,300 | | 5,300 | 4,900 | 4,400 | | 85 |
| 90 | 10,300 | 10,400 | 10,100 | 9,500 | 7,500 | 7,100 | 6,200 | 5,500 | 5,300 | 4,800 | 4,300 | | 90 |
| 95 | 9,300 | 9,700 | 9,700 | 9,400 | 7,500 | 7,000 | 6,100 | 5,400 | 5,300 | 4,700 | 4,200 | 3,900 | 95 |
| 100 | 8,200 | 8,900 | 9,100 | 9,000 | 7,500 | 6,800 | 6,000 | 5,300 | 5,300 | 4,600 | 4,100 | 3,800 | 100 |
| 105 | 7,300 | 7,900 | 8,400 | 8,600 | 7,500 | 6,700 | 5,800 | 5,200 | 5,100 | 4,500 | 4,000 | 3,700 | 105 |
| 110 | 6,500 | 7,000 | 7,500 | 7,800 | 7,100 | 6,600 | 5,700 | 5,100 | 5,000 | 4,300 | 3,900 | 3,600 | 110 |
| 115 | 5,700 | 6,200 | 6,600 | 6,900 | 6,300 | 6,400 | 5,600 | 5,100 | 4,900 | 4,200 | 3,800 | 3,600 | 115 |
| 120 | 5,000 | 5,500 | 5,900 | 6,100 | 5,600 | 6,300 | 5,500 | 5,000 | 4,700 | 4,100 | 3,700 | 3,500 | 120 |
| 125 | 4,400 | 4,800 | 5,200 | 5,400 | 5,000 | 5,700 | 5,400 | 4,900 | 4,600 | 4,000 | 3,700 | 3,400 | 125 |
| 130 | 3,800 | 4,200 | 4,500 | 4,700 | 4,400 | 5,100 | 5,300 | 4,900 | 4,300 | 3,900 | 3,600 | 3,400 | 130 |
| 135 | 3,300 | 3,700 | 4,000 | 4,100 | 3,900 | 4,500 | 5,100 | 4,800 | 3,800 | 3,800 | 3,500 | 3,300 | 135 |
| 140 | 2,900 | 3,200 | 3,400 | 3,500 | 3,400 | 4,000 | 4,500 | 4,800 | 3,300 | 3,800 | 3,400 | 3,300 | 140 |
| 145 | 2,400 | 2,700 | 2,900 | 3,000 | 3,000 | 3,500 | 4,000 | 4,300 | 2,900 | 3,500 | 3,400 | 3,200 | 145 |
| 150 | 2,000 | 2,300 | 2,500 | | 2,500 | 3,100 | 3,500 | 3,700 | 2,400 | 3,000 | 3,300 | 3,200 | 150 |
| 155 | 1,600 | 1,900 | 2,000 | | 2,200 | 2,600 | 3,000 | 3,200 | 2,100 | 2,600 | 3,000 | 3,100 | 155 |
| 160 | 1,300 | 1,500 | 1,600 | | 1,800 | 2,200 | 2,600 | 2,700 | 1,700 | 2,200 | 2,600 | 2,800 | 160 |
| 165 | 1,000 | 1,100 | 1,200 | | 1,500 | 1,900 | 2,200 | 2,300 | 1,400 | 1,800 | 2,200 | 2,400 | 165 |
| 170 | | | | | 1,200 | 1,500 | 1,800 | 1,900 | 1,000 | 1,500 | 1,800 | 2,000 | 170 |
| 175 | | | | | 900 | 1,200 | 1,400 | | | 1,200 | 1,400 | 1,600 | 175 |
| 180 | | | | | | 900 | 1,100 | | | | 1,100 | 1,200 | 180 |

This information is not for crane operation. Operator must refer to the in- cab information for crane operation. Rated lifting capacities shown on fully extended outriggers do not exceed 85% of the tipping loads and on tires do not exceed 75% of the tipping loads.



Courtesy of CraneMarket.com

# Main Boom Lift Capacity Charts - On Tires

**28,800 lb Counterweight - On Tires - Stationary - Boom Centered Over Front Between Tire Tracks**
**(All Capacities Are Listed In Pounds)**

| Radius (ft) | Boom Length (ft) | | | | | | | Radius (ft) |
|---|---|---|---|---|---|---|---|---|
| | 40.6 | 50 | 65 | 80 | 95 | 110 | 125 | |
| 12 | 67,500 | 68,600 | | | | | | 12 |
| 15 | 56,900 | 58,200 | | | | | | 15 |
| 20 | 44,500 | 45,900 | 47,100 | | | | | 20 |
| 25 | 35,900 | 37,300 | 38,600 | | | | | 25 |
| 30 | 29,500 | 31,000 | 32,300 | 33,100 | | | | 30 |
| 35 | | 25,300 | 26,900 | 27,800 | 28,300 | | | 35 |
| 40 | | 19,900 | 21,500 | 22,400 | 22,800 | | | 40 |
| 45 | | | 17,400 | 18,300 | 18,800 | 19,200 | | 45 |
| 50 | | | 14,400 | 15,300 | 15,800 | 16,100 | 16,300 | 50 |
| 55 | | | 12,000 | 12,800 | 13,400 | 13,800 | 14,000 | 55 |
| 60 | | | | 10,800 | 11,400 | 11,800 | 12,100 | 60 |
| 65 | | | | 9,200 | 9,700 | 10,100 | 10,400 | 65 |
| 70 | | | | 7,800 | 8,400 | 8,700 | 9,000 | 70 |
| 75 | | | | | 7,200 | 7,500 | 7,800 | 75 |
| 80 | | | | | 6,200 | 6,500 | 6,800 | 80 |
| 85 | | | | | 5,300 | 5,600 | 5,900 | 85 |
| 90 | | | | | | 4,900 | 5,100 | 90 |
| 95 | | | | | | 4,200 | 4,400 | 95 |
| 100 | | | | | | 3,600 | 3,800 | 100 |
| 105 | | | | | | | 3,300 | 105 |
| 110 | | | | | | | 2,800 | 110 |
| 115 | | | | | | | 2,300 | 115 |

This information is not for crane operation. Operator must refer to the in- cab information for crane operation. Rated lifting capacities shown on fully extended outriggers do not exceed 85% of the tipping loads and on tires do not exceed 75% of the tipping loads.



Courtesy of CraneMarket.com

## 28,800 lb Counterweight - On Tires - Pick & Carry (Creep) - Boom Centered Over Front

(All Capacities Are Listed In Pounds)

| Radius (ft) | Boom Length (ft) | | | | | | | Radius (ft) |
|---|---|---|---|---|---|---|---|---|
| | 40.6 | 50 | 65 | 80 | 95 | 110 | 125 | |
| 12 | 60,700 | 61,700 | | | | | | 12 |
| 15 | 50,500 | 51,700 | | | | | | 15 |
| 20 | 38,600 | 39,900 | 41,000 | | | | | 20 |
| 25 | 30,300 | 31,700 | 32,900 | | | | | 25 |
| 30 | 24,200 | 25,600 | 27,000 | 27,700 | | | | 30 |
| 35 | | 21,000 | 22,400 | 23,200 | 23,700 | | | 35 |
| 40 | | 17,300 | 18,700 | 19,600 | 20,100 | | | 40 |
| 45 | | | 15,900 | 16,600 | 17,200 | 17,600 | | 45 |
| 50 | | | 13,400 | 14,300 | 14,900 | 15,300 | 15,600 | 50 |
| 55 | | | 11,400 | 12,300 | 12,900 | 13,300 | 13,600 | 55 |
| 60 | | | | 10,600 | 11,100 | 11,600 | 11,900 | 60 |
| 65 | | | | 9,100 | 9,700 | 10,100 | 10,400 | 65 |
| 70 | | | | 7,800 | 8,400 | 8,700 | 9,000 | 70 |
| 75 | | | | | 7,200 | 7,500 | 7,800 | 75 |
| 80 | | | | | 6,200 | 6,500 | 6,800 | 80 |
| 85 | | | | | 5,300 | 5,600 | 5,900 | 85 |
| 90 | | | | | | 4,900 | 5,100 | 90 |
| 95 | | | | | | 4,200 | 4,400 | 95 |
| 100 | | | | | | 3,600 | 3,800 | 100 |
| 105 | | | | | | | 3,300 | 105 |
| 110 | | | | | | | 2,800 | 110 |
| 115 | | | | | | | 2,300 | 115 |

This information is not for crane operation. Operator must refer to the in- cab information for crane operation. Rated lifting capacities shown on fully extended outriggers do not exceed 85% of the tipping loads and on tires do not exceed 75% of the tipping loads.



Courtesy of CraneMarket.com

## 28,800 lb Counterweight - On Tires - Pick & Carry (2.5 mph) - Boom Centered Over Front

(All Capacities Are Listed In Pounds)

| Radius (ft) | Boom Length (ft) | | | | | | | Radius (ft) |
|---|---|---|---|---|---|---|---|---|
| | 40.6 | 50 | 65 | 80 | 95 | 110 | 125 | |
| 12 | 47,100 | 48,000 | | | | | | 12 |
| 15 | 38,800 | 40,000 | | | | | | 15 |
| 20 | 29,000 | 30,300 | 31,500 | | | | | 20 |
| 25 | 22,200 | 23,600 | 24,900 | | | | | 25 |
| 30 | 17,200 | 18,600 | 19,900 | 20,700 | | | | 30 |
| 35 | | 14,900 | 16,200 | 17,000 | 17,500 | | | 35 |
| 40 | | 11,800 | 13,300 | 14,100 | 14,700 | | | 40 |
| 45 | | | 10,900 | 11,700 | 12,300 | 12,700 | | 45 |
| 50 | | | 8,900 | 9,800 | 10,300 | 10,700 | 11,000 | 50 |
| 55 | | | 7,200 | 8,100 | 8,700 | 9,100 | 9,400 | 55 |
| 60 | | | | 6,700 | 7,300 | 7,700 | 8,000 | 60 |
| 65 | | | | 5,500 | 6,000 | 6,500 | 6,800 | 65 |
| 70 | | | | 4,400 | 5,000 | 5,400 | 5,700 | 70 |
| 75 | | | | | 4,100 | 4,500 | 4,800 | 75 |
| 80 | | | | | 3,300 | 3,700 | 4,000 | 80 |
| 85 | | | | | 2,500 | 2,900 | 3,300 | 85 |
| 90 | | | | | | 2,300 | 2,600 | 90 |
| 95 | | | | | | 1,700 | 2,000 | 95 |
| 100 | | | | | | 1,200 | 1,500 | 100 |
| 105 | | | | | | | 1,000 | 105 |

This information is not for crane operation. Operator must refer to the in- cab information for crane operation. Rated lifting capacities shown on fully extended outriggers do not exceed 85% of the tipping loads and on tires do not exceed 75% of the tipping loads.



Courtesy of CraneMarket.com

# Main Boom Lift Capacity Charts - 85% - Metric

**13.2t Counterweight - Fully Extended Outriggers - 360° Rotation**
**(All Capacities Are Listed In Kilograms)**

| Radius (m) | Boom Length (m) | | | | | | | | | Radius (m) |
|---|---|---|---|---|---|---|---|---|---|---|
| | 12.37 | 15.24 | 19.81-21.09 | 24.38 | 28.96 | 33.53 | 38.10-38.53 | 42.67 | 47.24 | |
| **2.5** | 90 700* | | | | | | | | | **2.5** |
| **3.0** | 85 000* | | | | | | | | | **3.0** |
| **3.0** | 75 100 | 52 150 | 43 950 | | | | | | | **3.0** |
| **3.5** | 68 550 | 52 150 | 43 950 | | | | | | | **3.5** |
| **4.0** | 62 950 | 52 150 | 43 950 | 25 150 | | | | | | **4.0** |
| **4.5** | 58 100 | 52 150 | 42 750 | 25 150 | | | | | | **4.5** |
| **5.0** | 52 450 | 52 000 | 40 250 | 25 150 | | | | | | **5.0** |
| **6.0** | 43 050 | 42 700 | 36 050 | 25 150 | 25 150 | 22 600 | | | | **6.0** |
| **7.0** | 36 200 | 35 900 | 32 500 | 25 150 | 25 150 | 21 900 | | | | **7.0** |
| **8.0** | 31 000 | 30 700 | 29 600 | 25 150 | 23 300 | 20 200 | 16 300 | | | **8.0** |
| **9.0** | 26 950 | 26 650 | 26 250 | 25 150 | 21 550 | 18 700 | 16 300 | 11 850 | | **9.0** |
| **10.0** | 23 650 | 24 400 | 25 100 | 25 150 | 20 000 | 17 400 | 15 350 | 11 850 | 9 000 | **10.0** |
| **12.0** | | 19 450 | 20 200 | 20 600 | 17 400 | 15 150 | 13 500 | 11 850 | 9 000 | **12.0** |
| **14.0** | | | 15 850 | 16 300 | 14 650 | 13 400 | 11 950 | 10 900 | 9 000 | **14.0** |
| **16.0** | | | 12 550 | 13 000 | 11 450 | 11 900 | 10 650 | 9 750 | 9 000 | **16.0** |
| **18.0** | | | 7 900 | 10 600 | 10 050 | 9 550 | 9 600 | 8 750 | 8 150 | **18.0** |
| **20.0** | | | | 8 800 | 9 100 | 7 850 | 8 100 | 7 900 | 7 300 | **20.0** |
| **22.0** | | | | 7 400 | 7 650 | 7 100 | 6 750 | 7 000 | 6 650 | **22.0** |
| **24.0** | | | | | 6 550 | 6 550 | 5 700 | 6 250 | 6 050 | **24.0** |
| **26.0** | | | | | 5 600 | 5 800 | 5 250 | 5 550 | 5 150 | **26.0** |
| **28.0** | | | | | | 5 000 | 4 800 | 4 750 | 4 400 | **28.0** |
| **30.0** | | | | | | 4 350 | 4 450 | 4 100 | 3 750 | **30.0** |
| **32.0** | | | | | | | 3 950 | 3 550 | 3 200 | **32.0** |
| **34.0** | | | | | | | 3 450 | 3 050 | 2 700 | **34.0** |
| **36.0** | | | | | | | 3 000 | 2 600 | 2 250 | **36.0** |
| **38.0** | | | | | | | | 2 250 | 1 900 | **38.0** |
| **40.0** | | | | | | | | 1 900 | 1 550 | **40.0** |
| **42.0** | | | | | | | | | 1 250 | **42.0** |
| **44.0** | | | | | | | | | 1 000 | **44.0** |

* Over Front Only With Special Equipment

This information is not for crane operation. Operator must refer to the in- cab information for crane operation. Rated lifting capacities shown on fully extended outriggers do not exceed 85% of the tipping loads and on tires do not exceed 75% of the tipping loads.



Courtesy of CraneMarket.com

# Fly Attachment Lift Capacity Charts - Optional

**13.2t Counterweight - Fully Extended Outriggers - 360° Rotation**
**(All Capacities Are Listed In Kilograms)**

**47.24m Main Boom Length**

| Radius (m) | 10.7m Manual Offset Fly | | | | 17.7m Manual Offset Fly | | | | 22.6m Manual Offset Fly | | | | Radius (m) |
|---|---|---|---|---|---|---|---|---|---|---|---|---|---|
| | 0° | 15° | 30° | 45° | 0° | 15° | 30° | 45° | 0° | 15° | 30° | 45° | |
| **14.0** | 5 100 | | | | | | | | | | | | **14.0** |
| **16.0** | 5 100 | | | | 3 450 | | | | 2 400 | | | | **16.0** |
| **18.0** | 5 100 | 5 300 | | | 3 450 | | | | 2 400 | | | | **18.0** |
| **20.0** | 5 100 | 5 300 | 5 200 | | 3 450 | | | | 2 400 | | | | **20.0** |
| **22.0** | 5 100 | 5 300 | 5 100 | 4 550 | 3 450 | 3 450 | | | 2 400 | 2 400 | | | **22.0** |
| **24.0** | 5 100 | 5 300 | 4 950 | 4 450 | 3 450 | 3 400 | | | 2 400 | 2 300 | | | **24.0** |
| **26.0** | 5 000 | 5 050 | 4 800 | 4 350 | 3 450 | 3 300 | 2 850 | | 2 400 | 2 250 | 2 000 | | **26.0** |
| **28.0** | 4 500 | 4 600 | 4 500 | 4 300 | 3 450 | 3 200 | 2 800 | 2 450 | 2 400 | 2 150 | 1 950 | | **28.0** |
| **30.0** | 3 850 | 4 150 | 4 250 | 4 100 | 3 450 | 3 100 | 2 700 | 2 400 | 2 400 | 2 100 | 1 850 | 1 700 | **30.0** |
| **32.0** | 3 300 | 3 550 | 3 800 | 3 900 | 3 450 | 3 050 | 2 650 | 2 350 | 2 350 | 2 000 | 1 800 | 1 700 | **32.0** |
| **34.0** | 2 800 | 3 050 | 3 250 | 3 400 | 3 100 | 2 950 | 2 550 | 2 300 | 2 250 | 1 950 | 1 750 | 1 650 | **34.0** |
| **36.0** | 2 400 | 2 600 | 2 800 | 2 900 | 2 650 | 2 900 | 2 500 | 2 250 | 2 150 | 1 900 | 1 700 | 1 600 | **36.0** |
| **38.0** | 2 000 | 2 200 | 2 350 | 2 450 | 2 250 | 2 600 | 2 450 | 2 250 | 2 100 | 1 850 | 1 650 | 1 550 | **38.0** |
| **40.0** | 1 700 | 1 850 | 2 000 | 2 050 | 1 950 | 2 250 | 2 400 | 2 200 | 1 900 | 1 750 | 1 600 | 1 500 | **40.0** |
| **42.0** | 1 400 | 1 550 | 1 650 | 1 700 | 1 650 | 1 900 | 2 150 | 2 200 | 1 600 | 1 700 | 1 550 | 1 500 | **42.0** |
| **44.0** | 1 100 | 1 250 | 1 350 | 1 400 | 1 350 | 1 600 | 1 850 | 1 950 | 1 300 | 1 600 | 1 550 | 1 450 | **44.0** |
| **46.0** | 850 | 1 000 | 1 050 | | 1 100 | 1 350 | 1 550 | 1 650 | 1 050 | 1 350 | 1 500 | 1 450 | **46.0** |
| **48.0** | 650 | 750 | 800 | | 900 | 1 100 | 1 250 | 1 350 | 850 | 1 100 | 1 250 | 1 400 | **48.0** |
| **50.0** | 450 | 550 | 600 | | 700 | 900 | 1 000 | 1 050 | 650 | 850 | 1 000 | 1 100 | **50.0** |
| **52.0** | | | | | 500 | 650 | 800 | 800 | 450 | 650 | 800 | 850 | **52.0** |
| **54.0** | | | | | | 500 | 550 | | | 450 | 600 | 650 | **54.0** |
| **56.0** | | | | | | | | | | | 400 | 400 | **56.0** |

This information is not for crane operation. Operator must refer to the in- cab information for crane operation. Rated lifting capacities shown on fully extended outriggers do not exceed 85% of the tipping loads and on tires do not exceed 75% of the tipping loads.



Courtesy of CraneMarket.com

# Main Boom Lift Capacity Charts - On Tires

**13.2t Counterweight - On Tires - Stationary - Boom Centered Over Front Between Tire Tracks**
**(All Capacities Are Listed In Kilograms)**

| Radius (m) | Boom Length (m) | | | | | | | Radius (m) |
|---|---|---|---|---|---|---|---|---|
| | 12.37 | 15.24 | 19.81 | 24.38 | 28.96 | 33.53 | 38.53 | |
| **4.0** | 28 650 | 29 150 | | | | | | **4.0** |
| **4.5** | 26 100 | 26 700 | | | | | | **4.5** |
| **5.0** | 23 950 | 24 550 | | | | | | **5.0** |
| **6.0** | 20 450 | 21 100 | 21 450 | | | | | **6.0** |
| **7.0** | 17 700 | 18 350 | 18 950 | | | | | **7.0** |
| **8.0** | 15 450 | 16 100 | 16 700 | | | | | **8.0** |
| **9.0** | 13 650 | 14 300 | 14 900 | 15 050 | | | | **9.0** |
| **10.0** | 12 050 | 12 750 | 13 400 | 13 750 | 10 350 | | | **10.0** |
| **12.0** | | 9 300 | 10 000 | 10 400 | 10 350 | | | **12.0** |
| **14.0** | | | 7 600 | 8 000 | 8 250 | 8 400 | 6 350 | **14.0** |
| **16.0** | | | 5 950 | 6 350 | 6 600 | 6 750 | 6 350 | **16.0** |
| **18.0** | | | | 5 050 | 5 300 | 5 500 | 5 600 | **18.0** |
| **20.0** | | | | 4 100 | 4 350 | 4 500 | 4 650 | **20.0** |
| **22.0** | | | | 3 300 | 3 550 | 3 700 | 3 850 | **22.0** |
| **24.0** | | | | | 2 900 | 3 050 | 3 200 | **24.0** |
| **26.0** | | | | | 2 350 | 2 550 | 2 650 | **26.0** |
| **28.0** | | | | | | 2 100 | 2 200 | **28.0** |
| **30.0** | | | | | | 1 700 | 1 800 | **30.0** |
| **32.0** | | | | | | | 1 500 | **32.0** |
| **34.0** | | | | | | | 1 200 | **34.0** |
| **36.0** | | | | | | | 950 | **36.0** |

This information is not for crane operation. Operator must refer to the in- cab information for crane operation. Rated lifting capacities shown on fully extended outriggers do not exceed 85% of the tipping loads and on tires do not exceed 75% of the tipping loads.



Courtesy of CraneMarket.com

## 13.2t Counterweight - On Tires - Pick & Carry (Creep) - Boom Centered Over Front

(All Capacities Are Listed In Kilograms)

| Radius (m) | Boom Length (m) | | | | | | | Radius (m) |
|---|---|---|---|---|---|---|---|---|
| | 12.37 | 15.24 | 19.81 | 24.38 | 28.96 | 33.53 | 38.53 | |
| **4.0** | 25 650 | 26 100 | | | | | | **4.0** |
| **4.5** | 23 250 | 23 750 | | | | | | **4.5** |
| **5.0** | 21 200 | 21 700 | | | | | | **5.0** |
| **6.0** | 17 800 | 18 350 | 18 650 | | | | | **6.0** |
| **7.0** | 15 100 | 15 700 | 16 250 | | | | | **7.0** |
| **8.0** | 13 000 | 13 600 | 14 200 | | | | | **8.0** |
| **9.0** | 11 200 | 11 850 | 12 450 | 12 600 | | | | **9.0** |
| **10.0** | 9 700 | 10 400 | 11 000 | 11 350 | 9 150 | | | **10.0** |
| **12.0** | | 8 050 | 8 700 | 9 050 | 9 150 | | | **12.0** |
| **14.0** | | | 6 950 | 7 350 | 7 550 | 7 750 | 6 200 | **14.0** |
| **16.0** | | | 5 600 | 6 000 | 6 250 | 6 450 | 6 200 | **16.0** |
| **18.0** | | | | 4 900 | 5 200 | 5 350 | 5 500 | **18.0** |
| **20.0** | | | | 4 050 | 4 300 | 4 500 | 4 650 | **20.0** |
| **22.0** | | | | 3 300 | 3 550 | 3 700 | 3 850 | **22.0** |
| **24.0** | | | | | 2 900 | 3 050 | 3 200 | **24.0** |
| **26.0** | | | | | 2 350 | 2 550 | 2 650 | **26.0** |
| **28.0** | | | | | | 2 100 | 2 200 | **28.0** |
| **30.0** | | | | | | 1 700 | 1 800 | **30.0** |
| **32.0** | | | | | | | 1 500 | **32.0** |
| **34.0** | | | | | | | 1 200 | **34.0** |
| **36.0** | | | | | | | 900 | **36.0** |

This information is not for crane operation. Operator must refer to the in- cab information for crane operation. Rated lifting capacities shown on fully extended outriggers do not exceed 85% of the tipping loads and on tires do not exceed 75% of the tipping loads.



Courtesy of CraneMarket.com

# This Page Intentionally Blank



Courtesy of CraneMarket.com

# This Page Intentionally Blank



Courtesy of CraneMarket.com

**Link- Belt Cranes** Lexington, Kentucky www.linkbelt.com

®Link- Belt is a registered trademark. Copyright 2019. We are constantly improving our products and therefore reserve the right to change designs and specifications.



*Courtesy of CraneMarket.com*