Technical Data

Specifications & Capacities

RTC 80160

Series II

Telescopic Boom Rough Terrain Crane

160 US ton

145 metric ton

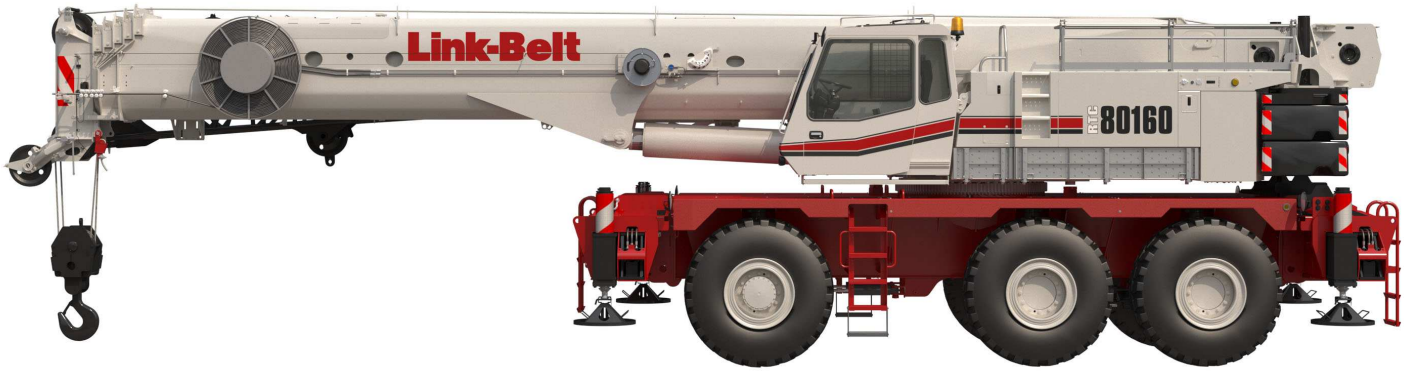

CAUTION: This material is supplied for reference use only. Operator must refer to in- cab Crane Rating Manual and Operator's Manual to determine allowable crane lifting capacities and assembly and operating procedures.

Courtesy of CraneMarket.com

Courtesy of CraneMarket.com

Table Of Contents

Boom, Attachments, and Upper Structure **1**
Boom 1
Boom 1
Boom Wear Pads 1
Boom Head 1
Boom Elevation 1
Auxiliary Lifting Sheave - Optional 1
Hook Blocks and Balls - Optional 1
Fly - Optional 1
Fly Extensions - Optional 1
Operator's Cab and Controls 2
Swing 3
Electrical 3
Load Hoist System 4
Load Hoist Performance 4
Main (Front) and Optional Auxiliary (Rear) Winches 4
Engine 4
Drive System 5
Fuel Tank 5
Hydraulic System 5
Pump Drive 5
Counterweight 5
Carrier **7**
General 7
Outriggers 7
Steering and Wheel Drive Motors 7
Suspension 7
Tires and Wheels 7
Brakes 7
Electrical 7
Hydraulic System 8
Maximum Speed 8
Gradeability 8
Paint 8
Axle Loads - Imperial **9**
Axle Loads - Metric **10**
Transport Configuration and Weights **11**
General Dimensions **11**
Boom Extend Modes **12**
Working Range Diagram **13**
Main Boom Lift Capacity Charts - Imperial **14**
35,000 lb Counterweight - Fully Extended Outriggers - 360° Rotation 14
59,000 lb Counterweight - Fully Extended Outriggers - 360° Rotation 15
Manual Offset Fly Attachment Lift Capacity Charts - Optional **16**
35,000 lb Counterweight - Fully Extended Outriggers - 360° Rotation 16
Main Boom + 10 ft Manual Offset Fly (2°, 15°, 30°, 45° Offsets) 16
59,000 lb Counterweight - Fully Extended Outriggers - 360° Rotation 17
Main Boom + 10 ft Manual Offset Fly (2°, 15°, 30°, 45° Offsets) 17

Courtesy of CraneMarket.com

35,000 lb Counterweight - Fully Extended Outriggers - 360° Rotation 18
195.3 ft Main Boom Length 18
31 ft Manual Offset Fly 18
55 ft Manual Offset Fly 18
59,000 lb Counterweight - Fully Extended Outriggers - 360° Rotation 19
195.3 ft Main Boom Length 19
31 ft Manual Offset Fly 19
55 ft Manual Offset Fly 19
195.3 ft Main Boom Length 20
73 ft Manual Offset Fly 20
91 ft Manual Offset Fly 20
109 ft Manual Offset Fly 20
Hydraulic Offset Fly Attachment Lift Capacity Charts - Optional 21
35,000 lb Counterweight - Fully Extended Outriggers - 360° Rotation 21
Main Boom + 10 ft Hydraulic Offset Fly (2° - 45° Offsets) 21
59,000 lb Counterweight - Fully Extended Outriggers - 360° Rotation 22
Main Boom + 10 ft Hydraulic Offset Fly (2° - 45° Offsets) 22
35,000 lb Counterweight - Fully Extended Outriggers - 360° Rotation 23
195.3 ft Main Boom Length 23
31 ft Hydraulic Offset Fly 23
55 ft Hydraulic Offset Fly 23
59,000 lb Counterweight - Fully Extended Outriggers - 360° Rotation 24
195.3 ft Main Boom Length 24
31 ft Hydraulic Offset Fly 24
55 ft Hydraulic Offset Fly 24
195.3 ft Main Boom Length 25
73 ft Hydraulic Offset Fly 25
91 ft Hydraulic Offset Fly 25
109 ft Hydraulic Offset Fly 25
On Tires Capacity Charts 26
31,400 lb Counterweight - On Tires - Stationary - Boom Centered Over Rear Between Tire Tracks 26
31,400 lb Counterweight - On Tires - Pick & Carry (Creep)
- Boom Centered Over Rear Between Tire Tracks 26
Working Range Diagram - Metric 27
Main Boom Lift Capacity Charts - 75% - Metric 28
15.9t Counterweight - Fully Extended Outriggers - 360° Rotation 28
26.7t Counterweight - Fully Extended Outriggers - 360° Rotation 29
Manual Offset Fly Attachment Lift Capacity Charts - 75% - Optional - Metric 30
15.9t Counterweight - Fully Extended Outriggers - 360° Rotation 30
Main Boom + 3m Manual Offset Fly (2°, 15°, 30°, 45° Offsets) 30
15.9t Counterweight - Fully Extended Outriggers - 360° Rotation 31
Main Boom + 3m Manual Offset Fly (2°, 15°, 30°, 45° Offsets) 31
26.7t Counterweight - Fully Extended Outriggers - 360° Rotation 32
Main Boom + 3m Manual Offset Fly (2°, 15°, 30°, 45° Offsets) 32
26.7t Counterweight - Fully Extended Outriggers - 360° Rotation 33
Main Boom + 3m Manual Offset Fly (2°, 15°, 30°, 45° Offsets) 33
15.9t Counterweight - Fully Extended Outriggers - 360° Rotation 34
59.5m Main Boom Length 34
9.4m Manual Offset Fly 34
16.8m Manual Offset Fly 34

Courtesy of CraneMarket.com

26.7t Counterweight - Fully Extended Outriggers - 360° Rotation 35
59.5m Main Boom Length 35
9.4m Manual Offset Fly 35
16.8m Manual Offset Fly 35
59.5m Main Boom Length 35
22.3m Manual Offset Fly 35
27.7m Manual Offset Fly 35
33.2m Manual Offset Fly 35
Hydraulic Offset Fly Attachment Lift Capacity Charts - 75% - Optional - Metric 36
15.9t Counterweight - Fully Extended Outriggers - 360° Rotation 36
Main Boom + 3m Hydraulic Offset Fly (2° - 45° Offsets) 36
26.7t Counterweight - Fully Extended Outriggers - 360° Rotation 37
Main Boom + 3m Hydraulic Offset Fly (2° - 45° Offsets) 37
15.9t Counterweight - Fully Extended Outriggers - 360° Rotation 38
59.5m Main Boom Length 38
9.4m Hydraulic Offset Fly 38
16.8m Hydraulic Offset Fly 38
26.7t Counterweight - Fully Extended Outriggers - 360° Rotation 39
59.5m Main Boom Length 39
9.4m Hydraulic Offset Fly 39
16.8m Hydraulic Offset Fly 39
59.5m Main Boom Length 39
22.3m Hydraulic Offset Fly 39
27.7m Hydraulic Offset Fly 39
33.2m Hydraulic Offset Fly 39
On Tires Capacity Charts - 75% 40
14.3t Counterweight - On Tires - Stationary - Boom Centered Over Rear Between Tire Tracks 40
14.3t Counterweight - On Tires - Pick & Carry (Creep)
- Boom Centered Over Rear Between Tire Tracks 40
Main Boom Lift Capacity Charts - 85% - Metric 41
15.9t Counterweight - Fully Extended Outriggers - 360° Rotation 41
26.7t Counterweight - Fully Extended Outriggers - 360° Rotation 42
Manual Offset Fly Attachment Lift Capacity Charts - 85% - Optional - Metric 43
15.9t Counterweight - Fully Extended Outriggers - 360° Rotation 43
Main Boom + 3m Manual Offset Fly (2°, 15°, 30°, 45° Offsets) 43
26.7t Counterweight - Fully Extended Outriggers - 360° Rotation 44
Main Boom + 3m Manual Offset Fly (2°, 15°, 30°, 45° Offsets) 44
15.9t Counterweight - Fully Extended Outriggers - 360° Rotation 45
59.5m Main Boom Length 45
9.4m Manual Offset Fly 45
16.8m Manual Offset Fly 45
26.7t Counterweight - Fully Extended Outriggers - 360° Rotation 46
59.5m Main Boom Length 46
9.4m Manual Offset Fly 46
16.8m Manual Offset Fly 46
59.5m Main Boom Length 47
22.3m Manual Offset Fly 47
27.7m Manual Offset Fly 47
33.2m Manual Offset Fly 47

Courtesy of CraneMarket.com

Hydraulic Offset Fly Attachment Lift Capacity Charts - 85% Optional - Metric **48**
15.9t Counterweight - Fully Extended Outriggers - 360° Rotation 48
Main Boom + 3m Hydraulic Offset Fly (2° - 45° Offsets) 48
26.7t Counterweight - Fully Extended Outriggers - 360° Rotation 49
Main Boom + 3m Hydraulic Offset Fly (2° - 45° Offsets) 49
15.9t Counterweight - Fully Extended Outriggers - 360° Rotation 50
59.5m Main Boom Length 50
9.4m Hydraulic Offset Fly 50
16.8m Hydraulic Offset Fly 50
26.7t Counterweight - Fully Extended Outriggers - 360° Rotation 51
59.5m Main Boom Length 51
9.4m Hydraulic Offset Fly 51
16.8m Hydraulic Offset Fly 51
59.5m Main Boom Length 51
22.3m Hydraulic Offset Fly 51
27.7m Hydraulic Offset Fly 51
33.2m Hydraulic Offset Fly 51
On Tires Capacity Charts - 85% **52**
14.3t Counterweight - On Tires - Stationary - Boom Centered Over Rear Between Tire Tracks 52
14.3t Counterweight - On Tires - Pick & Carry (Creep)
- Boom Centered Over Rear Between Tire Tracks 52

Courtesy of CraneMarket.com

Boom, Attachments, and Upper Structure

■ Boom

Design - Six section, formed construction of extra high tensile steel consisting of one base section and five telescoping sections. The two plate design of each section has multiple longitudinal bends for superior strength. Each telescoping section extends independently by means of one double- acting, single stage hydraulic cylinder with integral holding valves.

Boom

- 42.3- 195.3 ft (*12.9- 59.5m*) six section boom
- Five boom extend modes (EM1 through EM5), controlled from the operator's cab, provide superior capacities by varying the extension of the telescoping sections:
  - EM1 extends to 195.3 ft (*59.5m*)
  - EM2 extends to 180.3 ft (*55.0m*)
  - EM3 extends to 155.0 ft (*47.2m*)
  - EM4 extends to 129.6 ft (*39.5m*)
  - EM5 extends to 103.7 ft (*31.6m*)
- Mechanical boom angle indicator
- Wind speed indicator
- Maximum tip height for each extend mode is:
  - EM1 is 204 ft (*62.2m*)
  - EM2 is 189 ft (*57.6m*)
  - EM3 is 164 ft (*50.0m*)
  - EM4 is 139 ft (*42.4m*)
  - EM5 is 113 ft (*34.4m*)

Boom Wear Pads

- Wear pads with Teflon inserts that self- lubricate the boom sections
- Bottom wear pads are universal for T2- T5 telescoping boom sections
- Bottom wear pads are universal for the boom base section and T1 boom section
- Top wear pads are universal for all boom sections

Boom Head

- Six 16.38 in (*41.6cm*) root diameter nylon sheaves to handle up to twelve parts of line
- Easily removable wire rope guards
- Rope dead end lugs on each side of the boom head
- Boom head is designed for quick- reeve of the hook block

Boom Elevation

- One double acting hydraulic cylinder with integral holding valve
- Boom elevation: - 2.5° to 80°

Auxiliary Lifting Sheave - Optional

- Single 16.38 in (*41.6cm*) root diameter nylon sheave
- Easily removable wire rope guards
- Does not affect erection of the fly or use of the main head sheaves

Hook Blocks and Balls - Optional

- 150 ton (*136.0t*) 7 sheave, quick- reeve hook block with safety latch
- 100 ton (*90.7t*) 6 sheave, quick- reeve hook block with safety latch
- 80 ton (*72.5t*) 5 sheave, quick- reeve hook block with safety latch
- 50 ton (*45.3t*) 4 sheave, quick- reeve hook block with safety latch
- 35 ton (*31.7t*) 1 sheave, quick- reeve hook block with safety latch
- 12 ton (*10.8t*) hook ball (swivel) with safety latch

Fly - Optional

- 31 ft- 55 ft (*9.4- 16.8m*) two piece bi- fold lattice fly, stowable, offsettable to 2°, 15°, 30°, and 45°. Maximum tip height is 258 ft (*78.6m*).
- 10 ft- 31 ft - 55 ft (*3.0- 9.4- 16.8m*) three piece bi- fold lattice fly, stowable, offsettable to 2°, 15°, 30°, and 45°. Maximum tip height is 258 ft (*78.6m*).
- 10 ft- 31 ft - 55 ft (*3.0- 9.4- 16.8m*) three piece bi- fold lattice fly, stowable, hydraulically offsettable from 2° through 45°. Maximum tip height is 258 ft (*78.6m*).

Fly Extensions - Optional

- One 18 ft (*5.5m*) lattice extension, equipped with two 16.38 in (*41.6cm*) root diameter nylon sheaves, to be mounted between the boom head and fly options. Maximum tip height is 276 ft (*84.1m*). Minimum of 35,000 lb (*15.9t*) of counterweight required.
- Two 18 ft (*5.5m*) lattice extensions, one equipped with two 16.38 in (*41.6cm*) root diameter nylon sheaves, to be mounted between the boom head and fly options. Maximum tip height is 293 ft (*89.3m*). Minimum of 35,000 lb (*15.9t*) of counterweight required.
- Three 18 ft (*5.5m*) lattice extensions, one equipped with two 16.38 in (*41.6cm*) root diameter nylon sheaves, to be mounted between the boom head and fly options. Maximum tip height is 311 ft (*94.8m*). Minimum of 35,000 lb (*15.9t*) of counterweight required.

Courtesy of CraneMarket.com

■ Operator's Cab and Controls

Environmental Cab - Fully enclosed, one person cab of galvaneal steel structure with acoustical insulation. Equipped with:
- Tilting cab up to 20°
- Seat belt
- Tinted and tempered glass windows
- Five way adjustable, cushioned seat with headrests, removable back and seat belt
- Extra- large fixed front window with windshield wiper and washer
- Swing up roof window with windshield wiper and washer
- Sliding left side door with large fixed window
- Sliding right side window for ventilation
- Engine dependent warm - water heater with air ducts for front windshield defroster and cab floor
- Defroster fan for the front window
- Bubble level
- Circulating fan
- Sun screen
- LED dome lights
- Cup holder
- Fire extinguisher
- Left side viewing mirror
- Two position travel swing lock

Air Conditioning - Integral with cab heating system utilizing the same ventilation outlets

Steering Column - Pedestal type with tilt and telescope functions for operator comfort. Column includes the following controls and indicators:

Left and right levers include:
- Horn button
- Turn signal switch
- Driving light switch
- Forward/Neutral/Reverse direction switch

Panel mounted switches for:
- Travel park brake
- Steer mode selector
- 2/6 wheel drive/range selector
- Hazard flasher

Panel mounted indicator/warning lights for:
- Travel park brake
- Service brake pressure
- Turn signals
- Case filter restriction
- Charge filter restriction
- Rear wheel offset
- Emergency steer - optional

Armrest Controls - Two dual axis electronic joystick controllers or optional single axis electronic controllers for:
- Swing
- Boom hoist
- Main front winch
- Auxiliary rear winch - optional
- Drum rotation indication
- Drum rotation indicator activation switch
- Winch high/low speed disable switch(es)
- Cab heater and A/C controls
- Throttle unlock switch
- Throttle set switch
- Remote boom floodlight controls (optional)
- Cab tilt switch
- Warning horn button
- Swing park brake

Foot Controls
- Boom Telescope
- Swing brake
- Engine throttle
- Travel brake

Right Front Console - Controls and indicators for:
- Warning horn button
- Function disable switch
- Cab floodlights switch
- Console dimmer switch
- (2)- 12 volt accessory outlet (Switched & Unswitched)
- Emergency engine shutdown
- Windshield wiper/washer switch
- Ignition switch
- Programmable engine preheater
- Ignition indication light
- Boom floodlights switch - optional
- Rotating beacon/strobe light switch - optional
- Luffing fly switch - optional
- Pump disconnect switch

Camera Display - Located on dash console
- Displays right side of upper
- Displays main and auxiliary winches
- Displays rear view

Cab Instrumentation - Ergonomically positioned LCD display, CAN bus instrumentation for crane operation including:
- Tachometer
- Engine water temperature
- Fuel level
- Diesel exhaust fluid (DEF) level(1)
- Hydraulic oil temperature
- Travel circuit temperature
- Stop engine light
- Check engine light
- Wait to start light
- High exhaust temperature light(1)
- Exhaust system cleaning light(1)
- Exhaust system cleaning Disabled light(1)
- Diesel Exhaust Fluid (DEF) low level light(1)
- Swing park brake light
- Fine metering function set & %
- Fine metering active light
- Engine speed
- Engine air filter high restriction light
- Engine oil pressure light
- Battery voltage light
- Fuel rate (gal/hr)
- Engine load
- Third wrap indicator activation & setup - optional
- Engine Diagnostics
- Electronic Control Diagnostics
- Exhaust system cleaning inhibit switch(1)
- Exhaust system cleaning initiate switch(1)
- LCD camera display
  - One for right side view along catwalk
  - One for front winch
  - One for rear winch - optional
- Service interval indicator
  - Hydraulic oil
  - Engine oil
  - Miscellaneous - user defined

(1) (Tier 4f / Stage IV engine only)

Courtesy of CraneMarket.com

Diagnostic Center - Located on the left side of the front panel below the windshield
- Engine diagnostic
- RCL CAN bus diagnostic
- Crane Controller USB diagnostic
- RCL controller USB diagnostic
- Boom CAN bus diagnostic

Link-Belt Pulse – The Link-Belt in-house designed, total crane operating system that utilizes the display as a readout and operator interface for the following systems:
- **Rated Capacity Limiter** – LCD graphic audio – visual warning system integrated into the dash with anti – two block and function limiter. Operating data includes:
  - Crane configuration
  - Boom length
  - Boom head height
  - Allowed load and % of allowed load
  - RCL light bar
  - Boom angle
  - Radius of load
  - Actual load
  - Wind speed
  - Highlighted unit of measurement on working screen
  - Telescope operation displayed in real time
  - Third wrap indicator
  - Diagnostics
  - Operator settable alarms (include):
    - Maximum and minimum boom angles
    - Maximum tip height
    - Maximum boom length
    - Swing left/right positions
    - Operator defined area (imaginary plane)
  - Outrigger position sensing
  - Drum rotation direction indication
  - Diagnostics
- **Internal RCL Light Bar -** Visually informs the operator when crane is approaching maximum load capacity with a series of green, yellow, and red lights.
- **Telematics** – Cellular based data logging and monitoring system that provides:
  - Location and operational settings
  - Routine maintenance
  - Crane and engine monitoring
  - Diagnostic and fault codes

Integrated Third Wrap Indicator - Optional - Link- Belt Pulse color display visually and audibly warns the operator when the wire rope is down to the last three wraps.

Integrated Third Wrap Function Kickout - Optional - Link- Belt Pulse color display visually and audibly warns the operator when the wire rope is on the first/bottom layer and provides a function kickout when the wire rope is down to the last three wraps.

External RCL Light Bar - Optional - Visually informs the ground crew when crane is approaching maximum load capacity with a series of green, yellow, and red lights.

Extend Control Module
- Controls the extend modes
- Diagnostics

Electronic Controllers
- Controls all load lifting functions
- Diagnostics

Fine Metering
- Controls the initial reaction speeds of the main and auxiliary winches, boom hoist, and swing functions.
- Diagnostics

■ Swing

Motor/Planetary - Bi- directional hydraulic swing motor mounted to a planetary reducer for 360° continuous smooth swing at 1.5 rpm.

Swing Park Brake - 360°, electric over hydraulic, (spring applied/hydraulic released) multi- disc brake mounted on the speed reducer. Operated by a switch from the operator's cab.

Swing Brake - 360°, foot operated, hydraulic applied disc brake mounted to the speed reducer.

Swing Lock - Two- position swing lock (boom over front or rear) operated from the operator's cab.

■ Electrical

Swing Alarm - Audio warning device signals when the upper is swinging.

Lights
- Two LED working lights on front of the cab
- One rotating amber beacon on top of the cab
- One amber strobe beacon on top of the cab - optional
- One LED working light on top of cab - optional
- Boom LED floodlight - Single- optional
- Boom LED floodlight - Dual- optional
- Boom floodlight - High intensity remote controlled- optional

Electrical Center
- RCL by- pass switch
- Hour meter
- Battery disconnect switches
- 3 batteries provide 12 volt operation and starting
- Jumper posts
- Circuit breakers
- Outrigger position sensing CAN bus diagnostic port

Courtesy of CraneMarket.com

Load Hoist System

Load Hoist Performance

Main (Front) and Auxiliary (Rear) Winches - 7/8 in (*22mm*) Rope										
	Maximum Line Pull		Normal Line Speed		High Line Speed		Layer		Total	
Layer	lb	*kN*	ft/min	*m/min*	ft/min	*m/min*	ft	*m*	ft	*m*
1	25,955	*115.45*	143	*43.6*	282	*86.0*	125	*38.1*	125	*38.1*
2	23,418	*104.17*	158	*48.2*	313	*95.4*	138	*42.0*	263	*80.2*
3	21,332	*94.89*	173	*52.7*	343	*104.5*	152	*46.3*	415	*126.5*
4	19,588	*87.13*	189	*57.6*	374	*114.0*	165	*50.3*	580	*176.8*
5	18,108	*80.55*	204	*62.2*	405	*123.4*	179	*54.6*	759	*231.3*
6	16,835	*74.89*	220	*67.1*	435	*132.9*	192	*58.5*	951	*289.9*

Wire Rope Application		Diameter		Type	Maximum Permissible Load	
		in	*mm*		lb	*kg*
Main (Front) Winch	Standard	7/8	*22*	37x7 rotation resistant - non- rotating, galvanized, right lang lay (Type KC)	21,625	*9 809*
	Optional	7/8	*22*	35x7 rotation resistant - right lang lay (Type ZB)	20,920	*9 489.2*
	Optional	7/8	*22*	34x7 rotation resistant - Category 1- right lang lay (Type YB)	21,920	*9 942.7*
Auxiliary (Rear) Winch	Standard	7/8	*22*	37x7 rotation resistant - non- rotating, galvanized, right lang lay (Type KC)	21,625	*9 809*
	Optional	7/8	*22*	35x7 rotation resistant - right lang lay (Type ZB)	20,920	*9 489.2*
	Optional	7/8	*22*	34x7 rotation resistant - Category 1- right lang lay (Type YB)	21,920	*9 942.7*

Main (Front) and Optional Auxiliary (Rear) Winches

- Axial piston, full and half displacement (2- speed) motors driven through planetary reduction unit for positive control under all load conditions.
- Grooved lagging
- Power up/down mode of operation
- Hoist drum cable follower - optional
- Drum rotation indicator
- Drum diameter: 15 in (*38.1cm*)
- Rope length:
  - Main (Front): 900 ft (*274.3m*)
  - Auxiliary (Rear): 675 ft (*205.7m*) or 900 ft (*274.3m*)
- Maximum rope storage: 951 ft (*289.9m*)
- Terminator style socket and wedge

Engine

Specification	Cummins QSL	
Numbers of Cylinders	6	6
Cycle	4	4
Emissions Compliance Level:	Tier 4f/Stage IV(1)	Tier 3/Stage IIIA(2)
Bore and Stroke: inch (*mm*)	4.49 x 5.69 (*114 x 145*)	4.49 x 5.69 (*114 x 145*)
Piston Displacement: in^3 (*L*)	543 (*8.90*)	543 (*8.90*)
Max. Brake Horsepower: hp (*kW*)	345 (*257*) @ 2,000 rpm 333 (*248*) @ 2,100 rpm	350 (*261*) @ 1,900 rpm 325 (*242*) @ 2,100 rpm
Peak Torque: ft lb (*Nm*)	1,050 (*1 424*) @ 1,500 rpm	1,050 (*1 424*) @ 1,500 rpm
Electric/starting systems: volts	12/12	12/12
Alternator: amps	160	160
Crankcase Capacity: qt (*L*)	24 (*22.7*)	24 (*22.7*)

- Water/fuel separator w/ heater and water in fuel (WIF) sensor
- 120- volt block heater- Tier 4f/Stage IV
- 240- volt block heater- Tier 3/Stage IIIA
- Grid heater - 200 amp
- (1) Can only be sold and/or operated where Tier 4f and Stage IV off- highway emission standards are accepted.
- (2) Can only be sold and/or operated where Tier 3 and Stage IIIA off- highway emission standards are accepted.

Courtesy of CraneMarket.com

Drive System

Hydrostatic type consisting of two variable speed piston pumps supplying hydraulic power to six hydraulic cam lobe wheel drive motors computer controlled for smooth and reliable operation.

Fuel Tank

One 90 gal (*340.6L*) capacity tank

Diesel Exhaust Fluid (DEF) Tank

- One 10 gal (*37.9*L) capacity tank

Hydraulic System

All functions are hydraulically powered allowing positive precise control with independent or simultaneous operation of all functions.

Main Pumps

- One, two section gear pump for the boom hoist, telescope, and charge circuits.
- Two, closed- loop piston pumps serve as travel pumps. These two pumps supply hydraulic power to the wheel motors.
- Two, closed- loop piston pumps are mounted to the rear of the two travel pumps. The left pump drives the front winch and the right pump drives the optional rear winch.
- One, pressure compensated piston pump mounted to the rear of the left winch pump supplies hydraulic power to the outrigger, counterweight removal (optional), hydraulically off- settable fly (optional), oscillation, and travel brake circuits.
- One, single section gear pump mounted to the rear of the right side winch pump supplies hydraulic power to the swing and steering circuits.
- One, single section gear pump mounted to the engine front gear train accessory drive supplies hydraulic power to the hydraulic system cooling fan motor.

Hydraulic Reservoir - 255 gal (*965.3L*) capacity equipped with sight level gauge. Diffuser built in for deaeration. Magnetic drain plug and large internal magnet.

Filtration

- One, 7- micron filter located inside hydraulic reservoir, accessible for easy replacement
- One, 7- micron charge filter located next to the reservoir with an in- cab indicator light
- Two, 10- micron pressure filters located next to the reservoir with change indicators
- Three, 100 mesh suction strainers located inside the hydraulic reservoir

Counterbalance Valves - Boom extend cylinder and boom hoist cylinder are equipped with counterbalance valves to provide load lowering and prevents accidental load drop when hydraulic power is suddenly reduced.

Pump Drive

- All pumps except the hydraulic system, cooling fan, drive pump are mounted on the pump drive gearbox and mechanically driven by the diesel engine
- Boom hoist/telescope pump can be disconnected using a switch in the cab to aid in cold weather starting

Counterweight

Standard - Total of 35,000 lb (*15.9t*) consisting of auxiliary winch or 2,000 lb (*0.9t*) top counterweight, two 14,700 lb (*6.7t*) and one 3,600 lb (*1.6t*) removable counterweights pinned to the upper with capacities for:

- 0 lb (*0t*) counterweight
- 16,700 lb (*7.6t*) counterweight
- 20,300 lb (*9.2t*) counterweight
- 31,400 lb (*14.2t*) counterweight
- 35,000 lb (*15.9t*) counterweight

Optional - Total of 24,000 lb (*10.8t*) in addition to standard counterweight for a total of 59,000 lb (*26.7t*) counterweight with additional capacities for:

- 59,000 lb (*26.7t*) counterweight*

* Overall width of the crane increases to 15 ft 9 in (*4.8m*) for this counterweight configuration.

Hydraulic Counterweight Removal - Optional - Activated by a hand- held controller with enough cable to access the pins on each side of the counterweights.

Courtesy of CraneMarket.com

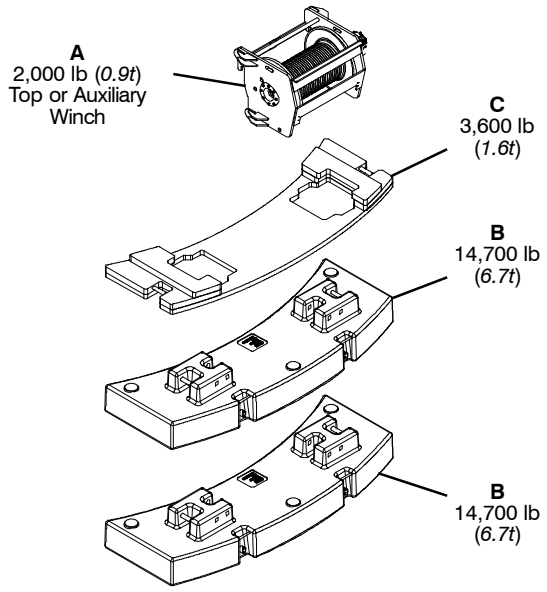

35,000 lb (*15.9t*)

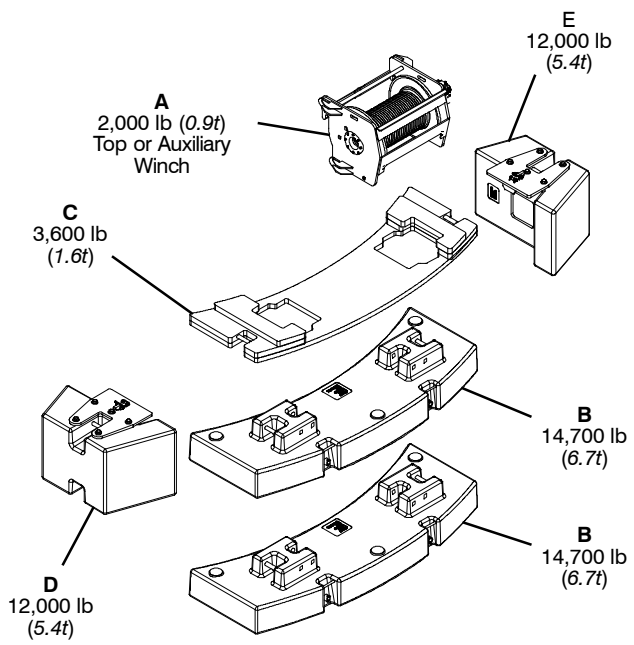

59,000 lb (*26.7t*)

Counterweight Packages			35,000 lb (*15.9t*) - Standard					
			59,000 (*26.7t*) - Optional					
Counterweight Modules			**A** 2,000 lb (*0.9t*)	**B** 14,700 lb (*6.7t*)	**B** 14,700 lb (*6.7t*)	**C** 3,600 lb (*1.6t*)	**D** 12,000 lb (*5.4t*)	E 12,000 lb (*5.4t*)
Counterweight Usage Configurations	0	0						
	A,B	16,700lb (*7.6t*)	X	X				
	A,B,C	20,300 lb (*9.2t*)	X	X		X		
	A,B,B	31,400 lb (*14.3t*)	X	X	X			
	A,B,B,C	35,000 lb (*15.9t*)	X	X	X	X		
	A,B,B,C,D,E	59,000 lb (*26.7t*)	X	X	X	X	X	X

*** Auxiliary winch (CTWT "A") replaces this counterweight for a two- drum configuration**

Courtesy of CraneMarket.com

Carrier

General

- 9 ft 10 in (*3.00m*) wide
- 16 ft 1 in (*4.90m*) wheelbase (centerline of first axle to centerline of third axle).

Frame - Box- type, torsion resistant, welded construction made of high tensile steel. Equipped with front and rear towing and tie- down lugs, tow connections, and access ladders.

Outriggers

Boxes - Two removable, double box, front and rear pinned to carrier frame. Hydraulic hoses have quick- disconnect fittings for ease for box removal. Hydraulic outrigger pin removal activated by a hand- held controller - optional.

Beams and Jacks - Four single stage beams with Confined Area Lifting Capacities (CALC™) provide selectable outrigger extensions of full, intermediate, and retracted. Hydraulically controlled from the operator's cab with integral check valves.

Pontoons - Four lightweight, quick release, 26 in (*0.66m*) diameter, steel pontoons with contact area of 531 in^2 (*3 425cm*^{2}) can be stored for road travel in storage racks on the carrier.

Main Jack Reaction - 160,000 lb (*72 574kg*) force and 301 psi (*2 075.3kPa*) ground bearing pressure.

Steering and Wheel Drive Motors

Steering - Four independent modes consisting of two wheel front, four wheel rear, six wheel, and crab. Each mode is controlled from the steering wheel and is selected by a switch in the operator's cab.

Drive - Three modes: 6x2 high, 6x2 low, and 6x6 for off highway travel

Front Drive Motors - Steered, driven for 6x2 and 6x6

Rear Drive Motors - Steered, non- driven for 6x2 and steered, driven for 6x6

Suspension

Front - Double "A" arms connected to oscillation cylinders that lockout when the upper structure rotates 3° past centerline of rotation.

Left Rear - Center and rear wheels mounted on double "A" arms connected to oscillation cylinders that lockout when the upper structure rotates 3° past centerline of rotation. Oscillation occurs across left center and left rear wheels.

Right Rear - Center and rear wheels mounted on double "A" arms connected to oscillation cylinders that lockout when the upper structure rotates 3° past centerline of rotation. Oscillation occurs across right center and right rear wheels.

Ride Height Adjustment - Suspension can be lowered for transport using a hand- held controller from the ground.

Tires and Wheels

Front and Rear - Six (single) 23.5R25, earthmover type tires on steel disc wheels

- Spare tires and wheels - optional

Brakes

Service - Full hydraulic, dual circuit, disc type brakes on all wheel ends

Parking/Emergency - Spring loaded type, acting on front wheel ends

Electrical

Lights

- Front lighting includes two main headlights and two parking/directional indicators
- Side lighting includes two parking/directional indicators per side
- Rear lighting includes two parking/directional indicators, two parking/brake lights, and two reverse lights
- Other equipment includes hazard/warning system

Courtesy of CraneMarket.com

Hydraulic System

Drive System - Hydrostatic type consisting of two variable speed piston pumps supplying hydraulic power to six hydraulic cam lobe wheel drive motors computer controlled for smooth and reliable operation.

Filtration - One, 60- micron, full flow, line filter in the wheel motor case drain circuit. Filter includes an in- cab change indicator. Accessible for easy filter replacement.

Maximum Speed

15.8 mph (*25.4 km/h*)

Gradeability

Counterweight	Ascending		Descending		Side	
	Degrees	% Grade	Degrees	% Grade	Degrees	% Grade
0 with outriggers removed	18.0	32%	1.0	2%	3.0	5%
0	15.0	27%	2.0	3%		
16,700 lbs (*7.6t*)	13.0	23%	8.0	14%		
20,300 lbs (*9.2t*)	12.0	21%	8.0	14%		
31,400 lbs (*14.3t*)	8.0	14%	11.0	19%		
35,000 lbs (*15.9t*)	6.0	11%	12.0	21%		
59,000 lbs (*26.7t*)	0.0	0%	10.0	18%		

Paint

Entire machine is pre-painted and oven baked with Highsolid Paint (2 part epoxy/polyester) and/or (2 part epoxy primer/2 part polyurethane top coat). Standard Link-Belt Red, Link-Belt Gray, and Gloss Black colors apply.

Courtesy of CraneMarket.com

Axle Loads - Imperial

Base machine with full tank of fuel and 35,000 lb of counterweight	Gross Vehicle Weight (1)	Upper Facing Front		Upper Facing Rear	
		Front Axle	Rear Axle Group	Front Axles	Rear Axle Group
	lb	lb	lb	lb	lb
Tier 4f/Stage IV	143,567	42,854	100,713	65,948	77,618
Tier 3/Stage IIIA	143,073	42,787	100,286	65,636	77,437
Operator in cab	250	154	96	39	211
Hydraulic outrigger pin removal	206	79	127	79	127
Remove outrigger boxes and beams	- 17,130	- 6,484	- 10,646	- 6,684	- 10,445
Pintle hook, front	13	20	- 7	20	- 7
Pintle hook, rear	13	- 10	23	- 10	23
Hydraulic counterweight removal	446	- 229	675	279	167
59,000 lb total counterweight	24,000	- 12,808	36,808	31,257	- 7,257
Remove 14,700 lb counterweight	- 14,742	7,867	- 22,609	- 19,200	4,458
Remove 14,700 lb counterweight	- 14,742	7,867	- 22,609	- 19,200	4,458
Remove 3,600 lb counterweight	- 3,600	1,921	- 5,521	- 4,689	1,089
Remove 2,000 lb counterweight - for one winch configuration only	- 2,017	1,304	- 3,321	- 2,855	838
Hoist drum follower - main	99	- 49	148	125	- 26
Auxiliary winch with 675 ft of wire rope	1,160	- 641	1,800	1,532	- 372
Remove auxiliary winch with 675 ft of wire rope - for two winch configuration only	- 2,913	1,840	- 4,753	- 4,079	1,166
Hoist drum follower - auxiliary	101	- 75	176	153	- 52
Remove 900 ft of wire rope - main winch	- 1,535	575	- 2,110	- 1,755	220
Remove 675 ft of wire rope - auxiliary winch	- 1,157	662	- 1,819	- 1,551	395
Substitute 675 ft of wire rope with 900 ft of wire rope - auxiliary winch	378	- 216	594	507	- 129
360° mechanical swing lock	140	57	83	50	90
Air conditioning	86	42	44	24	62
Auxiliary lifting sheave	120	370	- 250	- 277	397
Boom floodlight	15	40	- 25	- 28	43
Fly mounting brackets to boom base for fly options	290	530	- 240	- 307	597
31- 55 ft offsettable, two piece bi- fold fly - stowed	2,739	4,859	- 2,120	- 2,753	5,492
10- 31- 55 ft offsettable, three piece bi- fold fly - stowed	3,363	6,383	- 3,020	- 3,798	7,161
10- 31- 55 ft hydraulically offsettable, three piece bi- fold fly - stowed	3,804	7,592	- 3,788	- 4,667	8,471
Additional components for hydraulically offsettable fly	469	1,026	- 557	- 665	1,134
12 ton swivel hook ball (stowed at front/rear bumper)	722	1,153	- 431	- 598	1,320
12 ton swivel hook ball (stowed at boom head)	722	2,190	- 1,418	- 1,585	2,307
35 ton 1- sheave hook block (stowed at front/rear bumper)	1,100	1,756	- 656	- 911	2,011
35 ton 1- sheave hook block (stowed at boom head)	1,100	3,261	- 2,161	- 2,415	3,515
80 ton 5- sheave hook block (stowed at front/rear bumper)	1,411	2,253	- 842	- 1,168	2,579
80 ton 5- sheave hook block (stowed at boom head)	1,411	4,183	- 2,772	- 3,048	4,509
100 ton 6- sheave hook block (stowed at front/rear bumper)	1,750	2,794	- 1,044	- 1,449	3,199
100 ton 6- sheave hook block (stowed at boom head)	1,750	5,188	- 3,438	- 3,843	5,593
150 ton 7- sheave hook block (stowed at front/rear bumper)	2,394	3,822	- 1,428	- 1,982	4,376
150 ton 7- sheave hook block (stowed at boom head)	2,394	7,097	- 4,703	- 5,257	7,651

Tire	Maximum Load
23.5R25	57,330 lb

(1) Adjust gross vehicle weight and axle loading according to component weight.
Note: All weights are ±3%.

Courtesy of CraneMarket.com

Axle Loads - Metric

Base machine with full tank of fuel and *15.9t* of counterweight	Gross Vehicle Weight (1)	Upper Facing Front		Upper Facing Rear	
		Front Axle	Rear Axle Group	Front Axles	Rear Axle Group
	kg	*kg*	*kg*	*kg*	*kg*
Tier 4f/Stage IV	*65 121*	*19 438*	*45 683*	*29 914*	*35 207*
Tier 3/Stage IIIA	*64 897*	*19 408*	*45 489*	*29 771*	*35 125*
Operator in cab	*113*	*70*	*44*	*18*	*96*
Hydraulic outrigger pin removal	*93*	*36*	*58*	*36*	*58*
Remove outrigger boxes and beams	*- 7 770*	*- 2 941*	*- 4 829*	*- 3 032*	*- 4 738*
Pintle hook, front	*6*	*9*	*- 3*	*9*	*- 3*
Pintle hook, rear	*6*	*- 4*	*10*	*- 4*	*10*
Hydraulic counterweight removal	*202*	*- 104*	*306*	*127*	*76*
26.7t total counterweight	*10 886*	*- 5 809*	*16 696*	*14 178*	*- 3 292*
Remove *6.7t* counterweight	*- 6 687*	*3 568*	*- 10 255*	*- 8 709*	*2 022*
Remove *6.7t* counterweight	*- 6 687*	*3 568*	*- 10 255*	*- 8 709*	*2 022*
Remove *1.6t* counterweight	*- 1 633*	*871*	*- 2 504*	*- 2 127*	*494*
Remove *0.9t* counterweight - for one winch configuration only	*- 915*	*592*	*- 1 506*	*- 1 295*	*380*
Hoist drum follower - main	*45*	*- 22*	*67*	*22*	*- 169*
Auxiliary winch with *205.7m* of wire rope	*526*	*- 291*	*816*	*- 695*	*529*
Remove auxiliary winch with *205.7m* of wire rope - for two winch configuration only	*- 1 321*	*835*	*- 2 156*	*- 1 850*	*531*
Hoist drum follower - auxiliary	*46*	*- 34*	*80*	*34*	*- 80*
Remove *274.3kg* of wire rope - main winch	*- 696*	*261*	*- 957*	*- 796*	*100*
Remove *205.7m* of wire rope - auxiliary winch	*- 525*	*300*	*- 825*	*- 704*	*179*
Substitute *205.7m* of wire rope with *274.3kg* of wire rope - auxiliary winch	*171*	*- 98*	*270*	*230*	*- 59*
360° mechanical swing lock	*64*	*26*	*37*	*23*	*41*
Air conditioning	*39*	*19*	*20*	*11*	*28*
Auxiliary lifting sheave	*54*	*168*	*- 113*	*- 126*	*180*
Boom floodlight	*7*	*18*	*- 11*	*- 13*	*20*
Fly mounting brackets to boom base for fly options	*132*	*240*	*- 109*	*- 139*	*271*
9.4 - 16.7m offsettable, two piece bi- fold fly - stowed	*1 242*	*2 204*	*- 962*	*- 1 249*	*2 491*
3.0 - 9.4 - 16.7m offsettable, three piece bi- fold fly - stowed	*1 525*	*2 895*	*- 1 370*	*- 1 723*	*3 248*
3.0 - 9.4 - 16.7m hydraulically offsettable, three piece bi- fold fly - stowed	*1 725*	*3 443*	*- 1 718*	*- 2 117*	*3 842*
Additional components for hydraulically offsettable fly	*213*	*465*	*- 253*	*- 302*	*514*
10.8t swivel hook ball (stowed at front/rear bumper)	*327*	*523*	*- 195*	*- 271*	*599*
10.8t swivel hook ball (stowed at boom head)	*327*	*993*	*- 643*	*- 719*	*1 046*
31.7t 1- sheave hook block (stowed at front/rear bumper)	*499*	*797*	*- 298*	*- 413*	*912*
31.7t 1- sheave hook block (stowed at boom head)	*499*	*1 479*	*- 980*	*- 1 095*	*1 594*
72.5t 5- sheave hook block (stowed at front/rear bumper)	*640*	*1 022*	*- 382*	*- 530*	*1 170*
72.5t 5- sheave hook block (stowed at boom head)	*640*	*1 897*	*- 1 257*	*- 1 383*	*2 045*
90.7t 6- sheave hook block (stowed at front/rear bumper)	*794*	*1 267*	*- 473*	*- 657*	*1 451*
90.7t 6- sheave hook block (stowed at boom head)	*794*	*2 353*	*- 1 559*	*- 1 743*	*2 537*
136.0t 7- sheave hook block (stowed at front/rear bumper)	*1 086*	*1 734*	*- 648*	*- 899*	*1 985*
136.0t 7- sheave hook block (stowed at boom head)	*1 086*	*3 219*	*- 2 133*	*- 2 385*	*3 470*

Tire	Maximum Load
23.5R25	*26 004kg*

(1) Adjust gross vehicle weight and axle loading according to component weight.
Note: All weights are ±3%.

Courtesy of CraneMarket.com

Transport Configuration and Weights

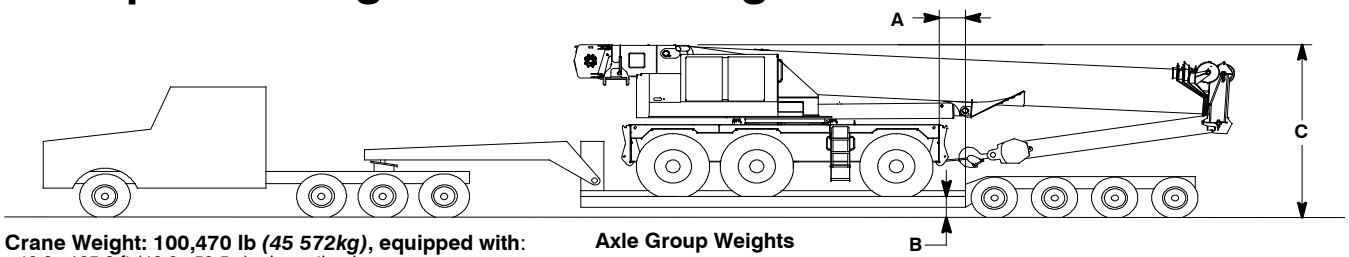

Crane Weight: 100,470 lb *(45 572kg)*, equipped with:
- 42.3- 195.3 ft (*12.9- 59.5m*), six section boom
- 80 ton (*72.57t*) hook block
- Main winch with 900 ft (*274m*) of 7/8 in (*22mm*) rope
- Auxiliary winch with 675 ft (*206m*) of 7/8 in (*22mm*) rope
- 10- 31- 55 ft (*3.0- 9.4- 16.7m*) offsettable, three piece bi- fold fly
- Hoist drum followers - Main and Auxiliary
- Auxiliary lifting sheave
- Air conditioning
- Hydraulic outrigger pin removal

Axle Group Weights

Empty Truck Wt.	Bed Length	Steer	Drivers	Trailer	A
50,500 lb (*22 906kg*)	26 ft (*7.92m*)	12,500 lb (*5 670kg*)	59,911 lb (*27 175kg*)	78,554 lb (*35 632kg*)	7 in (*17.8cm*)

B - 18 in (*0.46m*) or 24 in (*0.61m*)

	Normal Suspension	Collapsed Suspension
C [with 18 in (*0.46m*) Trailer]	14 ft 1 in (*4.29m*)	13 ft 10 in (*4.22m*)
C [with 24 in (*0.61m*) Trailer]	14 ft 7 in (*4.45m*)	14 ft 4 in (*4.37m*)

General Dimensions

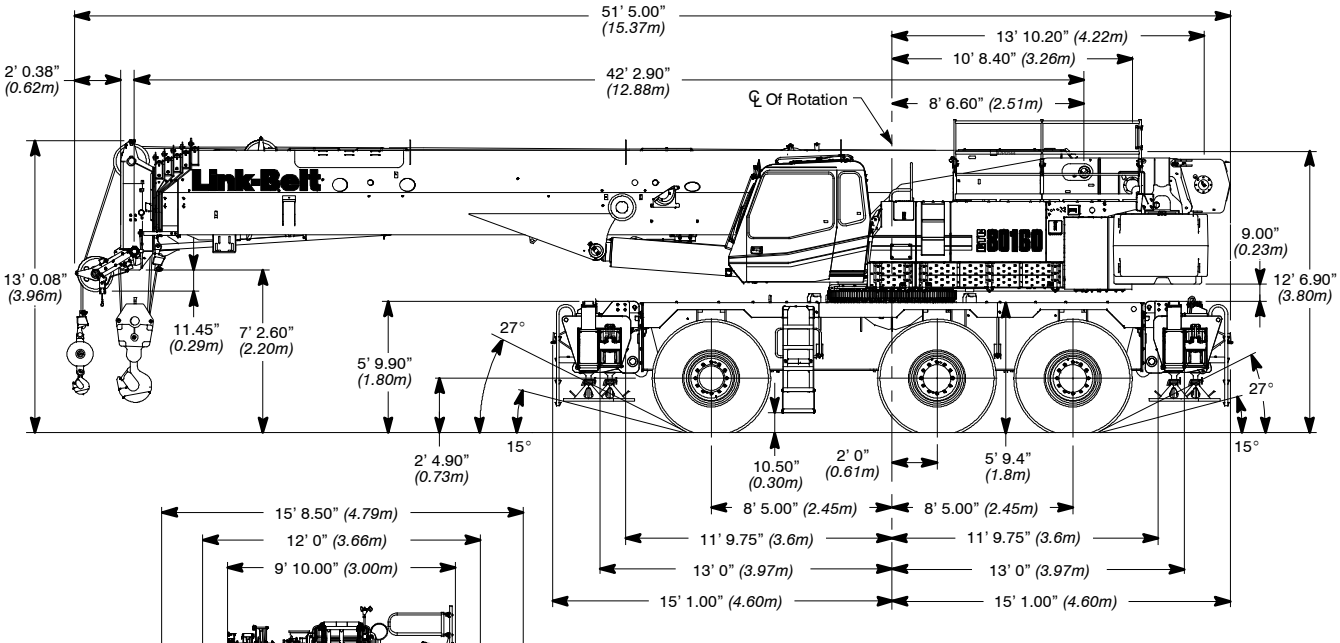

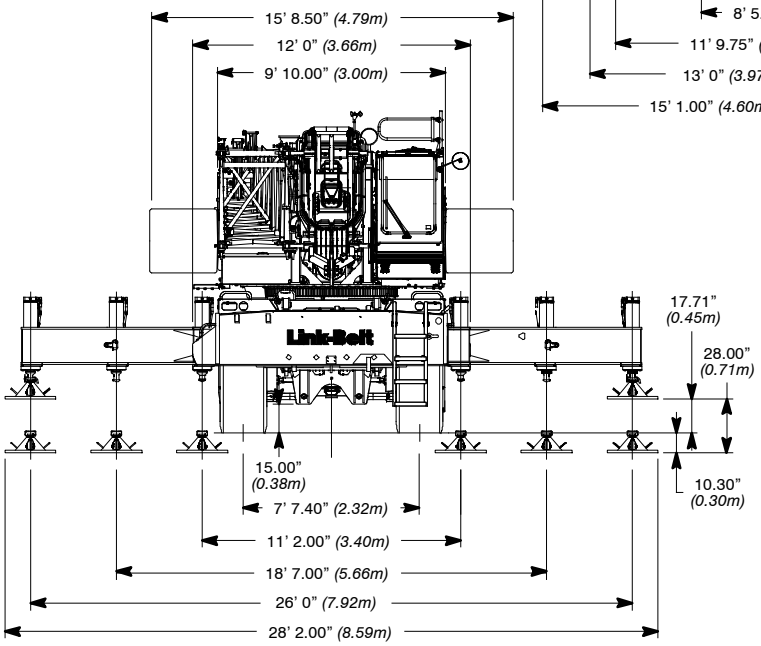

Turning Radius - 2 Wheel Steering	English	*Metric*
Wall to wall over carrier	44' 10"	*13.67m*
Wall to wall over boom attachment	56' 1"	*17.09m*
Curb to curb	41' 5"	*12.62m*
Centerline of tire	40' 4"	*12.29m*

Turning Radius - 6 Wheel Steering	English	*Metric*
Wall to wall over carrier	25' 5"	*7.75m*
Wall to wall over boom attachment	38' 10"	*11.84m*
Curb to curb	21' 10"	*6.66m*
Centerline of tire	20' 9"	*6.32m*

Tail Swing	English	*Metric*
of counterweight (w/o auxiliary winch)	15' 6"	*4.72m*
of auxiliary winch	15' 1"	*4.60m*

Courtesy of CraneMarket.com

Boom Extend Modes

Boom Length		Telescope Length				
ft	*m*	T5	T4	T3	T2	T1
42.3	*12.88*					
55	*16.8*	44%				
70	*21.3*	96%				
85	*25.9*	100%	46%			
100	*30.5*	100%	97%			
115	*35.1*	100%	100%	46%		
130	*39.6*	100%	100%	95%		
145	*44.2*	100%	100%	100%	43%	
160	*48.8*	100%	100%	100%	90%	
175	*53.3*	100%	100%	100%	100%	37%
185	*56.4*	100%	100%	100%	100%	68%
195.3	*59.52*	100%	100%	100%	100%	100%

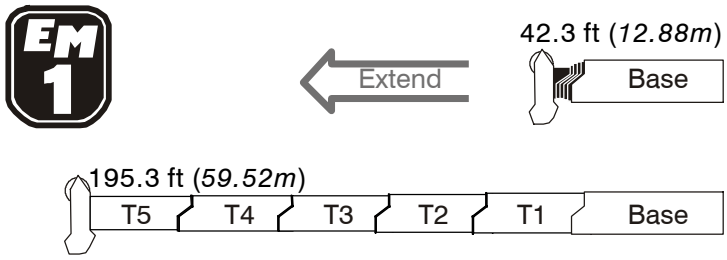

Boom Length		Telescope Length				
ft	*m*	T5	T4	T3	T2	T1
42.3	*12.88*					
55	*16.8*	44%				
70	*21.3*	90%	6%			
85	*25.9*	90%	57%			
100	*30.5*	90%	90%	17%		
115	*35.1*	90%	90%	66%		
130	*39.6*	90%	90%	90%	24%	
145	*44.2*	90%	90%	90%	71%	
160	*48.8*	90%	90%	90%	90%	28%
170	*51.8*	90%	90%	90%	90%	59%
180.3	*54.94*	90%	90%	90%	90%	91%

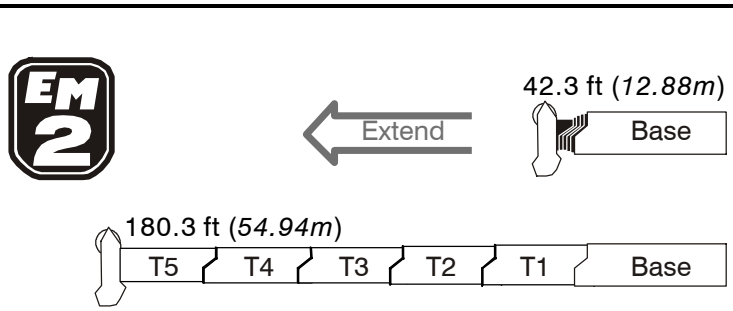

Boom Length		Telescope Length				
ft	*m*	T5	T4	T3	T2	T1
42.3	*12.88*					
55	*16.8*	44%				
70	*21.3*	46%	47%	1%		
85	*25.9*	46%	47%	50%		
100	*30.5*	46%	47%	90%	9%	
115	*35.1*	46%	47%	90%	45%	
130	*39.6*	46%	47%	90%	90%	13%
145	*44.2*	46%	47%	90%	90%	60%
155	*47.23*	46%	47%	90%	90%	91%

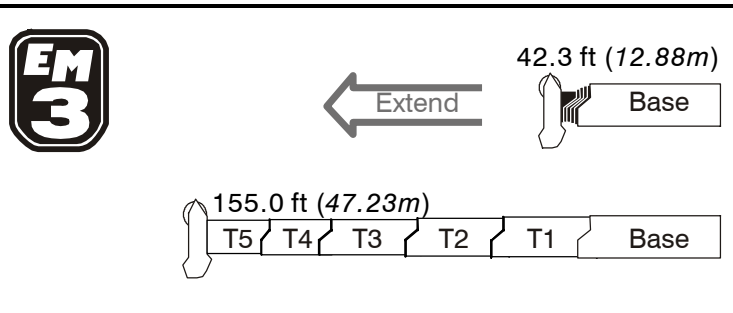

Boom Length		Telescope Length				
ft	*m*	T5	T4	T3	T2	T1
42.3	*12.88*					
55	*16.8*	44%				
70	*21.3*	46%	47%	1%		
85	*25.9*	46%	47%	49%	2%	
100	*30.5*	46%	47%	49%	49%	
115	*35.1*	46%	47%	49%	50%	46%
129.6	*39.49*	46%	47%	49%	50%	91%

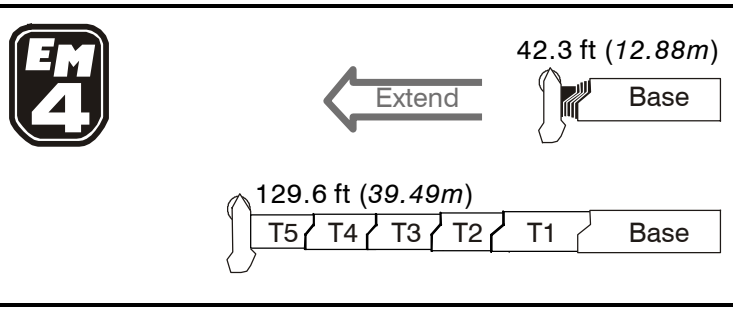

Boom Length		Telescope Length				
ft	*m*	T5	T4	T3	T2	T1
42.3	*12.88*					
56.4	*17.18*	0%	47%			
71.3	*21.72*	0%	47%	49%		
87.1	*26.53*	0%	47%	49%	50%	
103.7	*31.61*	0%	47%	49%	50%	51%

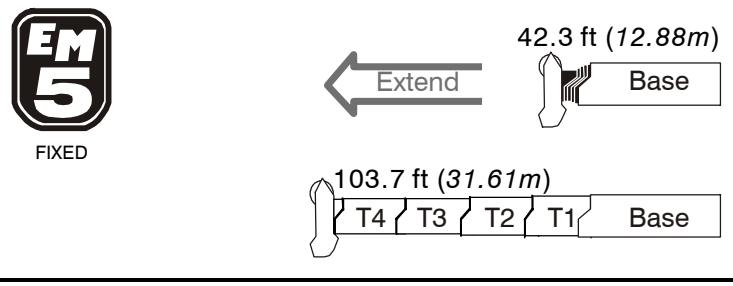

Courtesy of CraneMarket.com

Working Range Diagram

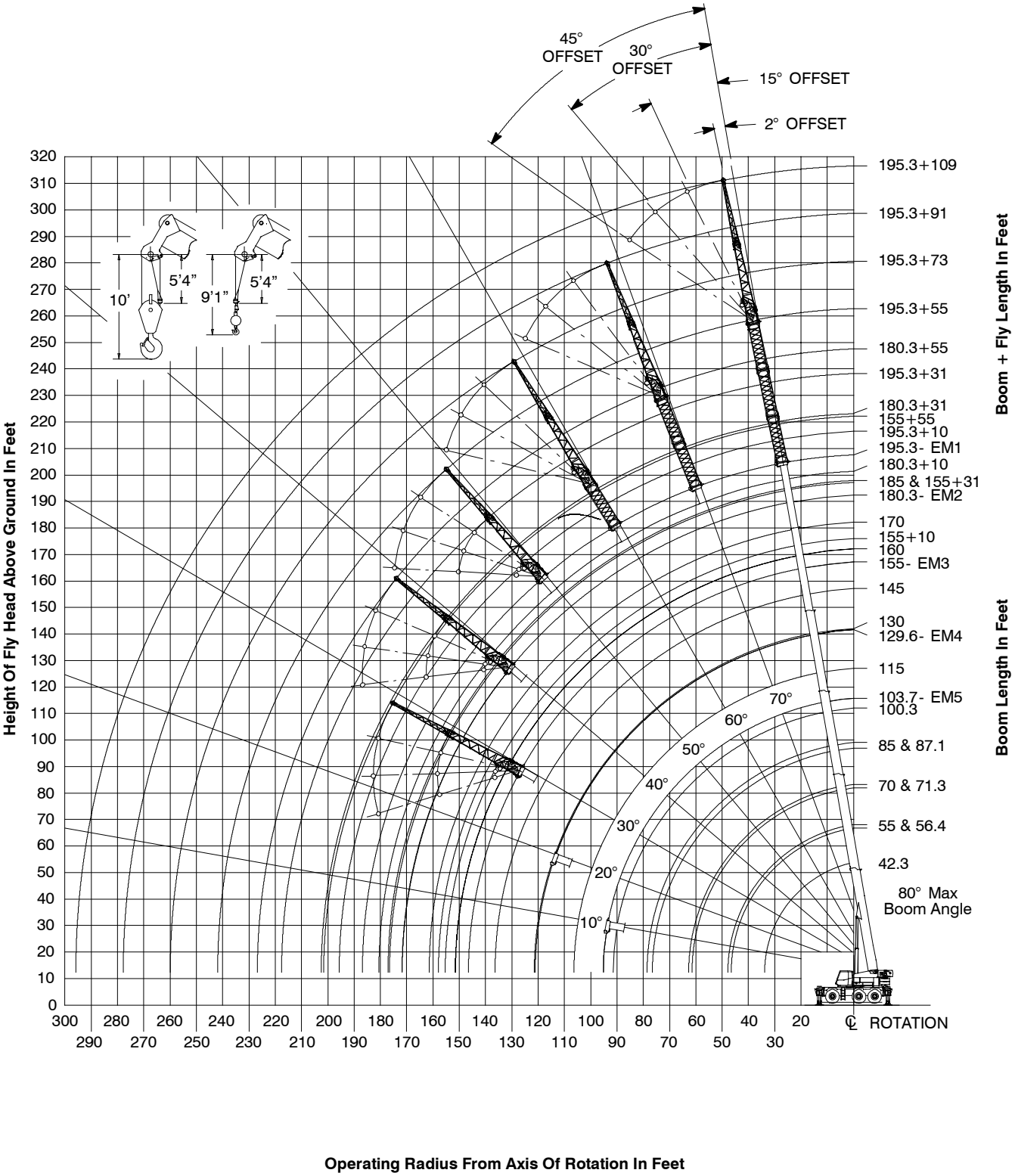

Courtesy of CraneMarket.com

Main Boom Lift Capacity Charts - Imperial

35,000 lb Counterweight - Fully Extended Outriggers - 360° Rotation
(All Capacities Are Listed In Pounds)

Radius (ft)	Boom Length (ft)															Radius (ft)
	42.3	55-56.35	70-71.2	85-87	100-103.7	115	129.5-130	145	155	160	170	175	180.2	185	195.3	
8	280,000															8
9	265,600															9
10	251,200	157,100	151,700													10
12	226,200	157,100	144,800													12
15	189,800	157,100	134,400	110,100												15
20	140,500	143,600	116,200	104,800	80,700	61,300										20
25	109,900	113,200	102,200	92,300	76,200	61,300	49,400									25
30	89,100	92,400	91,100	82,300	67,300	61,300	47,200	44,300	35,500	30,200						30
35		76,900	77,000	74,100	65,000	61,300	45,100	43,800	35,500	30,200	28,000	24,400	24,900	18,800		35
40		60,200	62,400	62,600	61,900	57,200	40,500	39,700	35,500	30,200	28,000	24,400	24,900	18,800	16,900	40
45		48,700	51,000	51,200	50,500	49,200	36,600	36,300	32,600	30,200	28,000	24,400	24,900	18,800	16,900	45
50			42,500	42,800	42,100	40,900	33,200	33,300	29,700	28,700	28,000	24,400	24,900	18,800	16,900	50
55			36,800	36,400	35,800	34,500	30,200	30,700	27,100	26,500	27,600	24,400	24,900	18,800	16,900	55
60			31,900	31,500	30,900	29,700	27,600	28,400	24,800	24,600	25,700	23,500	24,000	18,800	16,900	60
65				28,900	27,400	26,900	25,300	25,400	22,800	22,900	24,000	21,800	22,100	18,800	16,900	65
70				25,500	24,900	23,600	23,000	22,100	20,900	21,400	22,400	20,300	20,400	18,800	16,900	70
75				22,600	22,900	21,600	21,000	20,100	18,800	19,900	20,600	19,000	18,900	18,800	16,900	75
80					20,500	20,300	19,800	18,900	16,700	18,700	18,200	17,800	17,500	17,700	16,900	80
85					18,700	18,600	17,900	17,700	14,700	16,900	16,400	16,700	15,900	16,400	15,700	85
90					16,900	16,900	16,300	16,300	12,900	15,100	14,600	15,100	14,100	14,600	14,200	90
95					10,400	15,300	14,800	14,700	11,300	14,000	13,000	13,500	12,600	13,100	12,600	95
100						13,800	13,800	13,300	10,000	12,900	11,600	12,100	11,200	11,700	11,200	100
105						12,600	12,500	12,100	8,700	11,600	10,400	10,900	9,900	10,400	10,000	105
110							11,400	10,900	7,600	10,500	9,300	9,800	8,800	9,300	8,900	110
115							10,400	9,900	6,700	9,500	8,300	8,800	7,800	8,300	7,900	115
120							9,400	9,000	5,700	8,600	7,400	7,900	6,900	7,400	7,000	120
125								8,100	4,900	7,700	6,500	7,000	6,100	6,600	6,200	125
130								7,400	4,200	7,000	5,800	6,300	5,300	5,800	5,400	130
135								6,700	3,500	6,300	5,100	5,600	4,700	5,100	4,700	135
140									2,800	5,600	4,400	4,900	4,000	4,500	4,100	140
145									2,300	5,000	3,800	4,300	3,400	3,900	3,500	145
150										4,500	3,300	3,800	2,900	3,400	3,000	150
155											2,800	3,300	2,400	2,800	2,500	155
160											2,300	2,800	1,900	2,400	2,000	160
165												2,400	1,500	1,900	1,500	165
170														1,500	1,100	170
175														1,200		175

Note: Capacities depict multiple boom modes.

This information is not for crane operation. Operator must refer to the in- cab information for crane operation. Rated lifting capacities shown on fully extended outriggers do not exceed 85% of the tipping loads and on tires do not exceed 75% of the tipping loads.

Courtesy of CraneMarket.com

59,000 lb Counterweight - Fully Extended Outriggers - 360° Rotation
(All Capacities Are Listed In Pounds)

Radius (ft)	Boom Length (ft)															Radius (ft)
	42.3	55-56.35	70-71.2	85-87	100-103.7	115	129.5-130	145	155	160	170	175	180.2	185	195.3	
7	320,000**															7
8	300,000*															8
8	280,000															8
9	268,800															9
10	254,200	157,100	151,700													10
12	229,000	157,100	144,800													12
15	198,700	157,100	134,400	110,100												15
20	152,800	150,700	116,200	104,800	80,700	61,300										20
25	119,900	123,000	102,200	92,300	76,200	61,300	49,400									25
30	97,500	100,800	91,100	82,300	67,300	61,300	47,200	44,300	35,500	30,200						30
35		84,600	82,200	74,100	65,000	61,300	45,100	43,800	35,500	30,200	28,000	24,400	24,900	18,800		35
40		73,000	73,300	67,300	62,100	57,200	40,500	39,700	35,500	30,200	28,000	24,400	24,900	18,800	16,900	40
45		63,500	64,600	61,600	56,900	51,900	36,600	36,300	32,600	30,200	28,000	24,400	24,900	18,800	16,900	45
50			56,200	54,800	52,400	47,500	33,200	33,300	29,700	28,700	28,000	24,400	24,900	18,800	16,900	50
55			48,200	48,600	47,900	43,600	30,200	30,700	27,100	26,500	27,600	24,400	24,900	18,800	16,900	55
60			41,800	42,200	41,600	40,200	27,600	28,400	24,800	24,600	25,700	23,500	24,000	18,800	16,900	60
65				37,100	36,500	35,300	25,400	26,300	22,800	22,900	24,000	21,800	22,100	18,800	16,900	65
70				32,900	32,400	31,300	23,500	24,500	20,900	21,400	22,400	20,300	20,400	18,800	16,900	70
75				29,300	28,900	27,800	21,900	22,800	19,300	19,900	21,000	19,000	18,900	18,800	16,900	75
80					25,800	24,800	20,500	21,300	17,800	18,700	19,600	17,800	17,500	17,700	16,900	80
85					23,200	22,200	19,200	19,800	16,500	17,500	18,500	16,700	16,300	16,500	15,700	85
90					21,300	20,000	18,000	18,500	15,200	16,500	17,300	15,700	15,100	15,400	14,600	90
95					16,600	18,400	16,900	17,200	14,100	15,500	16,300	14,800	14,100	14,300	13,500	95
100						17,400	16,000	16,100	13,100	14,600	15,300	13,900	13,100	13,300	12,600	100
105						15,900	15,000	14,700	12,100	13,800	14,400	13,100	12,200	12,500	11,700	105
110							14,200	13,300	11,200	13,100	13,600	12,400	11,300	11,600	10,900	110
115							13,500	12,600	10,400	12,300	12,800	11,700	10,500	10,900	10,100	115
120							12,900	11,900	9,600	11,700	12,100	11,100	9,800	10,100	9,400	120
125								11,300	8,900	11,100	11,100	10,500	9,100	9,500	8,700	125
130								10,800	8,200	10,500	10,100	9,900	8,500	8,800	8,100	130
135								10,300	7,600	9,700	9,300	9,400	7,900	8,200	7,500	135
140									6,900	8,900	8,500	8,900	7,300	7,700	7,000	140
145									6,100	8,200	7,700	8,200	6,800	7,200	6,500	145
150										7,500	7,000	7,500	6,300	6,700	6,000	150
155											6,400	6,900	5,800	6,200	5,500	155
160											5,800	6,300	5,400	5,700	5,100	160
165												5,700	4,800	5,300	4,600	165
170													4,300	4,800	4,300	170
175														4,300	3,900	175
180															3,400	180
185															3,000	185

Note: Capacities depict multiple boom modes.
* Over front only
** Over front only on intermediate outriggers and special equipment required

This information is not for crane operation. Operator must refer to the in- cab information for crane operation. Rated lifting capacities shown on fully extended outriggers do not exceed 85% of the tipping loads and on tires do not exceed 75% of the tipping loads.

Courtesy of CraneMarket.com

Manual Offset Fly Attachment Lift Capacity Charts - Optional

35,000 lb Counterweight - Fully Extended Outriggers - 360° Rotation
(All Capacities Are Listed In Pounds)

Radius (ft)	Main Boom + 10 ft Manual Offset Fly (2°, 15°, 30°, 45° Offsets)															Radius (ft)
	Boom Length (ft)															
	42.3	55	70	85	100	115	130	145	155	160	170	175	180.2	185	195.3	
10	51,800	51,800														10
12	47,300	51,800	51,800													12
15	46,300	46,700	51,800	51,800												15
20	45,100	45,600	45,800	45,400	51,100											20
25	44,500	44,800	45,000	44,700	43,300	45,800	40,200									25
30	44,500	44,300	44,400	44,100	42,900	41,900	40,200	36,100	28,600	24,100		15,300				30
35	44,500	44,200	44,000	43,700	41,100	40,700	38,000	36,100	28,600	24,100	22,300	15,300	19,600	14,200	12,400	35
40	44,500	44,200	43,900	43,400	37,400	37,000	34,600	35,700	28,600	24,100	22,300	15,300	19,600	14,200	12,400	40
45		44,200	43,900	43,300	34,500	34,000	31,800	32,900	28,600	24,100	22,300	15,300	19,600	14,200	12,400	45
50		42,600	43,500	43,300	31,800	31,200	29,200	30,500	28,000	24,100	22,300	15,300	19,600	14,200	12,400	50
55		36,100	37,000	36,900	29,400	28,800	26,900	28,300	25,600	24,100	22,300	15,300	19,600	14,200	12,400	55
60			32,000	31,900	27,300	26,600	24,900	26,300	23,400	22,600	22,300	15,300	19,600	14,200	12,400	60
65			27,900	27,800	25,500	24,700	23,100	24,500	21,400	21,000	21,700	15,300	19,600	14,200	12,400	65
70			25,200	24,400	23,800	23,000	21,400	22,000	19,600	19,500	20,300	15,300	18,900	14,200	12,400	70
75				22,600	21,400	20,700	20,000	19,200	18,000	18,200	19,000	15,300	16,700	14,200	12,400	75
80				20,500	19,400	18,300	17,700	17,200	16,500	17,100	17,800	15,300	16,300	14,200	12,400	80
85				18,400	18,400	17,200	16,800	16,200	14,400	16,000	16,000	15,100	15,000	14,200	12,400	85
90					16,700	16,200	15,800	15,200	12,700	14,700	14,200	14,200	13,700	14,100	12,400	90
95					15,100	15,100	14,400	14,200	11,100	13,100	12,600	13,100	12,100	12,600	12,100	95
100					13,900	13,700	13,000	12,900	9,700	11,800	11,200	11,700	10,700	11,200	10,700	100
105						12,400	11,800	11,600	8,500	11,100	10,000	10,400	9,500	9,900	9,500	105
110						11,300	11,100	10,500	7,400	10,000	8,800	9,300	8,400	8,800	8,400	110
115						10,300	10,100	9,500	6,400	9,000	7,800	8,300	7,400	7,800	7,400	115
120							9,100	8,600	5,500	8,100	6,900	7,400	6,400	6,900	6,500	120
125							8,300	7,700	4,700	7,300	6,100	6,500	5,600	6,100	5,600	125
130							7,500	7,000	3,900	6,500	5,300	5,800	4,900	5,300	4,900	130
135								6,300	3,200	5,800	4,600	5,100	4,200	4,600	4,200	135
140								5,600	2,600	5,200	4,000	4,400	3,500	4,000	3,500	140
145								5,100	2,000	4,600	3,400	3,900	2,900	3,400	3,000	145
150										4,000	2,900	3,300	2,400	2,800	2,400	150
155										3,500	2,400	2,800	1,900	2,300	1,900	155
160										3,100	1,900	2,300	1,400	1,900	1,400	160
165												1,900		1,400		165
170												1,500				170
175												1,100				175

This information is not for crane operation. Operator must refer to the in- cab information for crane operation. Rated lifting capacities shown on fully extended outriggers do not exceed 85% of the tipping loads and on tires do not exceed 75% of the tipping loads.

Courtesy of CraneMarket.com

59,000 lb Counterweight - Fully Extended Outriggers - 360° Rotation

(All Capacities Are Listed In Pounds)

Radius (ft)	Main Boom + 10 ft Manual Offset Fly (2°, 15°, 30°, 45° Offsets)															Radius (ft)
	Boom Length (ft)															
	42.3	55	70	85	100	115	130	145	155	160	170	175	180.2	185	195.3	
10	51,800	51,800														10
12	47,300	51,800	51,800													12
15	46,300	46,700	51,800	51,800												15
20	45,100	45,600	45,800	45,400	51,100											20
25	44,500	44,800	45,000	44,700	43,300	45,800	40,200									25
30	44,500	44,300	44,400	44,100	42,900	41,900	40,200	36,100	28,600	24,100		15,300				30
35	44,500	44,200	44,000	43,700	41,100	40,700	38,000	36,100	28,600	24,100	22,300	15,300	19,600	14,200	12,400	35
40	44,500	44,200	43,900	43,400	37,400	37,000	34,600	35,700	28,600	24,100	22,300	15,300	19,600	14,200	12,400	40
45		44,200	43,900	43,300	34,500	34,000	31,800	32,900	28,600	24,100	22,300	15,300	19,600	14,200	12,400	45
50		44,200	43,900	43,300	31,800	31,200	29,200	30,500	28,000	24,100	22,300	15,300	19,600	14,200	12,400	50
55		42,800	43,900	43,300	29,400	28,800	26,900	28,300	25,600	24,100	22,300	15,300	19,600	14,200	12,400	55
60			42,800	40,900	27,300	26,600	24,900	26,300	23,400	22,600	22,300	15,300	19,600	14,200	12,400	60
65			37,700	37,500	25,500	24,700	23,100	24,500	21,400	21,000	21,700	15,300	19,600	14,200	12,400	65
70			33,500	33,400	23,800	23,000	21,400	22,800	19,600	19,500	20,300	15,300	18,900	14,200	12,400	70
75				29,800	22,300	21,500	20,000	21,200	18,000	18,200	19,000	15,300	16,700	14,200	12,400	75
80				26,800	21,000	20,100	18,600	19,700	16,700	17,100	17,800	15,300	16,300	14,200	12,400	80
85				24,200	19,800	18,800	17,400	18,400	15,400	16,000	16,800	15,100	15,000	14,200	12,400	85
90					18,700	17,700	16,500	17,200	14,200	15,000	15,800	14,200	13,900	14,100	12,400	90
95					17,800	16,800	15,400	16,200	13,100	14,100	14,900	13,300	12,900	13,100	12,300	95
100					17,000	15,800	14,500	15,100	12,100	13,200	14,000	12,500	11,900	12,100	11,400	100
105						14,900	13,600	14,000	11,100	12,400	13,200	11,700	11,100	11,300	10,500	105
110						14,100	12,800	13,100	10,300	11,700	12,400	11,000	10,200	10,500	9,700	110
115						13,200	12,100	11,800	9,400	11,000	11,600	10,400	9,500	9,700	9,000	115
120							11,400	10,700	8,700	10,400	10,900	9,700	8,700	9,000	8,300	120
125							10,800	10,000	8,000	9,800	10,300	9,200	8,100	8,400	7,700	125
130							10,300	9,500	7,300	9,200	9,600	8,600	7,500	7,700	7,000	130
135								9,000	6,700	8,700	8,800	8,100	6,900	7,200	6,500	135
140								8,600	6,100	8,200	8,000	7,600	6,300	6,600	5,900	140
145								8,200	5,600	7,800	7,300	7,200	5,800	6,100	5,400	145
150									5,100	7,100	6,600	6,800	5,300	5,600	4,900	150
155									4,600	6,400	6,000	6,400	4,800	5,200	4,500	155
160										5,900	5,400	5,800	4,400	4,700	4,100	160
165											4,800	5,300	4,000	4,300	3,700	165
170											4,300	4,700	3,600	4,000	3,300	170
175												4,300	3,200	3,600	2,900	175
180													2,900	3,300	2,600	180
185														2,900	2,300	185

This information is not for crane operation. Operator must refer to the in- cab information for crane operation. Rated lifting capacities shown on fully extended outriggers do not exceed 85% of the tipping loads and on tires do not exceed 75% of the tipping loads.

Courtesy of CraneMarket.com

35,000 lb Counterweight - Fully Extended Outriggers - 360° Rotation
(All Capacities Are Listed In Pounds)

195.3 ft Main Boom Length

Radius (ft)	31 ft Manual Offset Fly				55 ft Manual Offset Fly				Radius (ft)
	2°	15°	30°	45°	2°	15°	30°	45°	
50	10,800								50
55	10,800				8,300				55
60	10,800	10,800			8,300				60
65	10,800	10,800			8,300				65
70	10,800	10,800	10,900		8,300				70
75	10,800	10,800	10,900	11,100	8,300	8,300			75
80	10,800	10,800	10,900	11,100	8,300	8,300			80
85	10,800	10,800	10,900	11,100	8,300	8,200			85
90	10,800	10,800	10,900	11,100	8,300	8,100	7,400		90
95	10,800	10,800	10,900	11,100	8,300	8,000	7,300		95
100	10,800	10,800	10,900	11,100	8,300	7,900	7,300	6,800	100
105	9,800	10,400	10,800	11,100	8,300	7,900	7,200	6,800	105
110	8,600	9,300	9,900	10,300	8,300	7,800	7,100	6,700	110
115	7,600	8,200	8,800	9,300	8,300	7,700	7,100	6,700	115
120	6,700	7,300	7,800	8,200	7,500	7,600	7,000	6,700	120
125	5,900	6,400	6,900	7,300	6,600	7,500	7,000	6,700	125
130	5,100	5,600	6,100	6,400	5,800	6,700	6,900	6,600	130
135	4,400	4,900	5,300	5,600	5,100	6,000	6,800	6,600	135
140	3,800	4,200	4,600	4,900	4,500	5,200	6,000	6,600	140
145	3,200	3,600	4,000	4,200	3,900	4,600	5,300	5,800	145
150	2,600	3,000	3,400	3,600	3,300	4,000	4,700	5,100	150
155	2,100	2,500	2,800	3,000	2,800	3,400	4,100	4,500	155
160	1,700	2,000	2,300	2,400	2,300	2,900	3,500	3,900	160
165	1,200	1,500	1,800	1,900	1,900	2,400	3,000	3,300	165
170		1,100	1,300	1,400	1,400	2,000	2,500	2,800	170
175						1,500	2,000	2,300	175
180						1,100	1,600	1,800	180
185							1,100	1,300	185

This information is not for crane operation. Operator must refer to the in- cab information for crane operation. Rated lifting capacities shown on fully extended outriggers do not exceed 85% of the tipping loads and on tires do not exceed 75% of the tipping loads.

Courtesy of CraneMarket.com

59,000 lb Counterweight - Fully Extended Outriggers - 360° Rotation
(All Capacities Are Listed In Pounds)

195.3 ft Main Boom Length

Radius (ft)	31 ft Manual Offset Fly				55 ft Manual Offset Fly				Radius (ft)
	2°	15°	30°	45°	2°	15°	30°	45°	
50	10,800								50
55	10,800				8,300				55
60	10,800	10,800			8,300				60
65	10,800	10,800			8,300				65
70	10,800	10,800	10,900		8,300				70
75	10,800	10,800	10,900	11,100	8,300	8,300			75
80	10,800	10,800	10,900	11,100	8,300	8,300			80
85	10,800	10,800	10,900	11,100	8,300	8,200			85
90	10,800	10,800	10,900	11,100	8,300	8,100	7,400		90
95	10,800	10,800	10,900	11,100	8,300	8,000	7,300		95
100	10,800	10,800	10,900	11,100	8,300	7,900	7,300	6,800	100
105	10,100	10,400	10,800	11,100	8,300	7,900	7,200	6,800	105
110	9,300	9,700	10,100	10,300	8,300	7,800	7,100	6,700	110
115	8,700	9,000	9,300	9,600	8,300	7,700	7,100	6,700	115
120	8,000	8,300	8,700	8,900	7,700	7,600	7,000	6,700	120
125	7,400	7,700	8,000	8,300	7,100	7,500	7,000	6,700	125
130	6,800	7,100	7,400	7,600	6,600	7,000	6,900	6,600	130
135	6,300	6,600	6,900	7,100	6,100	6,500	6,900	6,600	135
140	5,800	6,100	6,300	6,500	5,600	6,000	6,400	6,600	140
145	5,300	5,600	5,800	6,000	5,100	5,500	5,900	6,300	145
150	4,900	5,100	5,300	5,500	4,700	5,100	5,500	5,800	150
155	4,500	4,700	4,900	5,000	4,300	4,600	5,000	5,300	155
160	4,000	4,300	4,500	4,600	3,900	4,200	4,600	4,800	160
165	3,700	3,900	4,000	4,100	3,500	3,900	4,200	4,400	165
170	3,300	3,500	3,700	3,700	3,200	3,500	3,800	4,000	170
175	3,000	3,100	3,300	3,300	2,800	3,100	3,400	3,600	175
180	2,600	2,800	2,900		2,500	2,800	3,100	3,200	180
185	2,300	2,500	2,600		2,200	2,500	2,700	2,900	185
190	2,000	2,200	2,300		1,900	2,200	2,400	2,500	190
195	1,800	1,900	1,900		1,600	1,900	2,100	2,200	195
200	1,500	1,600	1,700		1,400	1,600	1,800	1,800	200
205	1,200	1,300			1,100	1,300	1,500		205
210						1,100	1,200		210

This information is not for crane operation. Operator must refer to the in- cab information for crane operation. Rated lifting capacities shown on fully extended outriggers do not exceed 85% of the tipping loads and on tires do not exceed 75% of the tipping loads.

Courtesy of CraneMarket.com

59,000 lb Counterweight - Fully Extended Outriggers - 360° Rotation
(All Capacities Are Listed In Pounds)

195.3 ft Main Boom Length

Radius (ft)	73 ft Manual Offset Fly				91 ft Manual Offset Fly				109 ft Manual Offset Fly				Radius (ft)
	2°	15°	30°	45°	2°	15°	30°	45°	2°	15°	30°	45°	
65	6,700												65
70	6,700				5,200								70
75	6,700	6,800			5,200								75
80	6,700	6,800			5,200								80
85	6,700	6,800			5,200	5,200			3,100				85
90	6,700	6,800			5,200	5,200			3,100	3,100			90
95	6,700	6,800	6,900		5,200	5,200			3,100	3,100			95
100	6,700	6,800	6,900		5,200	5,200	5,300		3,100	3,100			100
105	6,700	6,800	6,900	6,400	5,200	5,200	5,300		3,100	3,100	3,100		105
110	6,700	6,800	6,800	6,200	5,200	5,200	5,200	4,800	3,100	3,100	3,100		110
115	6,700	6,800	6,800	6,100	5,200	5,200	5,000	4,600	3,100	3,100	3,100		115
120	6,200	6,600	6,700	6,000	5,200	5,200	4,900	4,400	3,100	3,100	2,900		120
125	5,600	6,000	6,500	5,800	4,800	5,200	4,700	4,300	3,100	3,100	2,700	2,400	125
130	5,000	5,400	6,000	5,700	4,300	4,800	4,500	4,200	2,900	2,900	2,500	2,300	130
135	4,500	4,900	5,400	5,600	3,800	4,300	4,400	4,000	2,500	2,700	2,400	2,200	135
140	4,000	4,400	4,900	5,300	3,400	3,800	4,200	3,900	2,000	2,500	2,200	2,000	140
145	3,600	3,900	4,400	4,800	2,900	3,300	3,800	3,800	1,600	2,100	2,100	1,900	145
150	3,100	3,500	3,900	4,300	2,500	2,900	3,400	3,700	1,200	1,700	2,000	1,800	150
155	2,700	3,100	3,500	3,800	2,100	2,500	3,000	3,300		1,300	1,700	1,600	155
160	2,300	2,700	3,100	3,400	1,800	2,100	2,600	2,900			1,300	1,500	160
165	2,000	2,300	2,700	3,000	1,400	1,800	2,200	2,500				1,300	165
170	1,600	2,000	2,300	2,600	1,100	1,400	1,800	2,100				1,300	170
175	1,300	1,600	2,000	2,200		1,100	1,500	1,700				1,200	175
180		1,300	1,600	1,800			1,100	1,400					180
185			1,300	1,500									185
190				1,100									190

This information is not for crane operation. Operator must refer to the in- cab information for crane operation. Rated lifting capacities shown on fully extended outriggers do not exceed 85% of the tipping loads and on tires do not exceed 75% of the tipping loads.

Courtesy of CraneMarket.com

Hydraulic Offset Fly Attachment Lift Capacity Charts - Optional

35,000 lb Counterweight - Fully Extended Outriggers - 360° Rotation
(All Capacities Are Listed In Pounds)

Main Boom + 10 ft Hydraulic Offset Fly (2° - 45° Offsets)

Radius (ft)	Main Boom Length (ft)															Radius (ft)
	42.3	55	70	85	100	115	130	145	155	160	170	175	180.2	185	195.3	
10	51,800	51,800														10
12	47,100	51,800	51,800													12
15	46,200	46,500	51,800	51,800												15
20	45,000	45,400	45,600	45,200	51,000											20
25	44,400	44,600	44,800	44,500	43,100	45,600	40,000									25
30	44,400	44,200	44,200	44,000	42,700	41,700	40,000	35,900	28,500	24,000		15,200				30
35	44,400	44,100	43,900	43,600	40,700	40,300	37,600	35,900	28,500	24,000	22,200	15,200	19,500	14,100	12,300	35
40	44,400	44,100	43,700	43,300	37,000	36,600	34,400	33,500	28,500	24,000	22,200	15,200	19,500	14,100	12,300	40
45		44,100	43,700	43,200	34,100	33,600	31,400	32,500	28,500	24,000	22,200	15,200	19,500	14,100	12,300	45
50		42,200	43,200	43,000	31,400	30,800	28,800	30,100	27,600	24,000	22,200	15,200	19,500	14,100	12,300	50
55		35,800	36,700	36,500	29,000	28,400	26,500	27,900	25,200	24,000	22,200	15,200	19,500	14,100	12,300	55
60			31,700	31,600	26,900	26,200	24,500	25,900	22,900	22,200	22,200	15,200	19,500	14,100	12,300	60
65			27,600	27,500	25,100	24,300	22,700	24,100	21,000	20,600	21,300	15,200	19,500	14,100	12,300	65
70			24,900	24,100	23,400	22,600	21,000	21,600	19,200	19,100	19,900	15,200	18,500	14,100	12,300	70
75				22,200	21,000	20,400	19,600	18,800	17,600	17,700	18,600	15,200	16,600	14,100	12,300	75
80				20,100	19,000	18,000	17,300	16,800	16,100	16,700	17,400	15,200	15,800	14,100	12,300	80
85				18,100	18,000	16,800	16,400	15,700	14,100	15,600	15,600	14,700	14,600	14,100	12,300	85
90					16,300	15,800	15,400	14,700	12,300	14,300	13,800	13,800	13,300	13,700	12,300	90
95					14,700	14,700	14,000	13,800	10,700	12,700	12,200	12,700	11,700	12,200	11,700	95
100					13,600	13,300	12,600	12,500	9,300	11,400	10,800	11,300	10,300	10,800	10,400	100
105						12,000	11,400	11,300	8,100	10,600	9,600	10,000	9,100	9,600	9,100	105
110						10,900	10,700	10,100	7,000	9,600	8,500	8,900	8,000	8,400	8,000	110
115						9,900	9,700	9,100	6,000	8,600	7,400	7,900	7,000	7,400	7,000	115
120							8,800	8,200	5,100	7,700	6,500	7,000	6,100	6,500	6,100	120
125							7,900	7,400	4,300	6,900	5,700	6,200	5,200	5,700	5,200	125
130							7,200	6,600	3,500	6,100	4,900	5,400	4,500	4,900	4,500	130
135								5,900	2,800	5,400	4,300	4,700	3,800	4,200	3,800	135
140								5,200	2,200	4,800	3,600	4,100	3,200	3,600	3,200	140
145								4,700	1,600	4,200	3,000	3,500	2,600	3,000	2,600	145
150										3,600	2,500	2,900	2,000	2,500	2,000	150
155										3,100	2,000	2,400	1,500	2,000	1,500	155
160										2,700	1,500	2,000		1,500		160
165												1,500				165

This information is not for crane operation. Operator must refer to the in- cab information for crane operation. Rated lifting capacities shown on fully extended outriggers do not exceed 85% of the tipping loads and on tires do not exceed 75% of the tipping loads.

Courtesy of CraneMarket.com

59,000 lb Counterweight - Fully Extended Outriggers - 360° Rotation
(All Capacities Are Listed In Pounds)

Main Boom + 10 ft Hydraulic Offset Fly (2° - 45° Offsets)

Radius (ft)	Main Boom Length (ft)															Radius (ft)
	42.3	55	70	85	100	115	130	145	155	160	170	175	180.2	185	195.3	
10	51,800	51,800														10
12	47,100	51,800	51,800													12
15	46,200	46,500	51,800	51,800												15
20	45,000	45,400	45,600	45,200	51,000											20
25	44,400	44,600	44,800	44,500	43,100	45,600	40,000									25
30	44,400	44,200	44,200	44,000	42,700	41,700	40,000	35,900	28,500	24,000		15,200				30
35	44,400	44,100	43,900	43,600	40,700	40,300	37,600	35,900	28,500	24,000	22,200	15,200	19,500	14,100	12,300	35
40	44,400	44,100	43,700	43,300	37,000	36,600	34,400	33,500	28,500	24,000	22,200	15,200	19,500	14,100	12,300	40
45		44,100	43,700	43,200	34,100	33,600	31,400	32,500	28,500	24,000	22,200	15,200	19,500	14,100	12,300	45
50		44,100	43,700	43,200	31,400	30,800	28,800	30,100	27,600	24,000	22,200	15,200	19,500	14,100	12,300	50
55		42,500	43,700	43,200	29,000	28,400	26,500	27,900	25,200	24,000	22,200	15,200	19,500	14,100	12,300	55
60			42,500	40,500	26,900	26,200	24,500	25,900	22,900	22,200	22,200	15,200	19,500	14,100	12,300	60
65			37,300	37,100	25,100	24,300	22,700	24,100	21,000	20,600	21,300	15,200	19,500	14,100	12,300	65
70			33,200	33,000	23,400	22,600	21,000	22,300	19,200	19,100	19,900	15,200	18,500	14,100	12,300	70
75				29,500	21,900	21,000	19,600	20,700	17,600	17,700	18,600	15,200	16,600	14,100	12,300	75
80				26,400	20,600	19,600	18,200	19,300	16,300	16,700	17,400	15,200	15,800	14,100	12,300	80
85				23,900	19,400	18,400	17,200	17,900	15,000	15,600	16,400	14,700	14,600	14,100	12,300	85
90					18,300	17,200	16,000	16,800	13,800	14,600	15,400	13,800	13,500	13,700	12,300	90
95					17,400	16,400	15,000	15,700	12,700	13,600	14,400	12,900	12,500	12,700	11,900	95
100					16,600	15,400	14,100	14,600	11,600	12,800	13,600	12,100	11,500	11,700	11,000	100
105						14,500	13,200	13,600	10,700	12,000	12,800	11,300	10,600	10,900	10,100	105
110						13,700	12,400	12,700	9,800	11,300	11,900	10,600	9,800	10,100	9,300	110
115						12,900	11,700	11,500	9,000	10,600	11,200	9,900	9,000	9,300	8,600	115
120							11,000	10,300	8,300	9,900	10,500	9,300	8,300	8,600	7,900	120
125							10,400	9,600	7,600	9,300	9,800	8,700	7,700	7,900	7,200	125
130							9,900	9,100	6,900	8,800	9,200	8,200	7,000	7,300	6,600	130
135								8,600	6,300	8,300	8,400	7,700	6,400	6,700	6,000	135
140								8,100	5,700	7,800	7,600	7,200	5,900	6,200	5,500	140
145								7,700	5,200	7,300	6,900	6,800	5,400	5,700	5,000	145
150									4,700	6,700	6,200	6,400	4,900	5,200	4,500	150
155									4,200	6,000	5,600	6,000	4,400	4,700	4,100	155
160										5,500	5,000	5,400	4,000	4,300	3,600	160
165											4,400	4,900	3,600	3,900	3,200	165
170											3,900	4,300	3,200	3,500	2,800	170
175												3,900	2,800	3,200	2,500	175
180													2,500	2,800	2,100	180
185														2,500	1,800	185

This information is not for crane operation. Operator must refer to the in- cab information for crane operation. Rated lifting capacities shown on fully extended outriggers do not exceed 85% of the tipping loads and on tires do not exceed 75% of the tipping loads.

Courtesy of CraneMarket.com

35,000 lb Counterweight - Fully Extended Outriggers - 360° Rotation
(All Capacities Are Listed In Pounds)

195.3 ft Main Boom Length

Radius (ft)	31 ft Hydraulic Offset Fly			55 ft Hydraulic Offset Fly			Radius (ft)
	2° - 15°	15° - 30°	30° - 45°	2° - 15°	15° - 30°	30° - 45°	
50	10,500						50
55	10,500			8,000			55
60	10,500	10,600		8,000			60
65	10,500	10,600		8,000			65
70	10,500	10,600	10,700	8,000	8,100		70
75	10,500	10,600	10,700	8,000	8,100		75
80	10,500	10,600	10,700	8,000	8,100		80
85	10,500	10,600	10,700	8,000	7,200	7,200	85
90	10,500	10,600	10,700	7,900	7,100	7,100	90
95	10,500	10,600	10,700	7,800	7,100	7,100	95
100	10,000	10,300	10,700	7,700	7,000	6,500	100
105	9,200	9,500	9,900	7,600	6,900	6,400	105
110	8,300	8,800	9,200	7,500	6,900	6,400	110
115	7,300	7,900	8,400	7,400	6,800	6,300	115
120	6,400	7,000	7,600	6,800	6,800	6,300	120
125	5,600	6,100	6,600	6,200	6,700	6,300	125
130	4,800	5,300	5,800	5,500	6,100	6,200	130
135	4,100	4,600	5,000	4,800	5,600	6,100	135
140	3,500	3,900	4,300	4,200	5,000	5,500	140
145	2,900	3,300	3,700	3,600	4,300	5,000	145
150	2,300	2,700	3,100	3,000	3,700	4,400	150
155	1,800	2,200	2,500	2,500	3,200	3,800	155
160	1,300	1,700	2,000	2,000	2,600	3,200	160
165		1,200	1,500	1,600	2,100	2,700	165
170				1,100	1,700	2,200	170
175					1,300	1,700	175
180						1,300	180

This information is not for crane operation. Operator must refer to the in- cab information for crane operation. Rated lifting capacities shown on fully extended outriggers do not exceed 85% of the tipping loads and on tires do not exceed 75% of the tipping loads.

Courtesy of CraneMarket.com

59,000 lb Counterweight - Fully Extended Outriggers - 360° Rotation
(All Capacities Are Listed In Pounds)

195.3 ft Main Boom Length							
Radius (ft)	31 ft Hydraulic Offset Fly			55 ft Hydraulic Offset Fly			Radius (ft)
	2° - 15°	15° - 30°	30° - 45°	2° - 15°	15° - 30°	30° - 45°	
50	10,500						50
55	10,500			8,000			55
60	10,500	10,600		8,000			60
65	10,500	10,600		8,000			65
70	10,500	10,600	10,700	8,000	8,100		70
75	10,500	10,600	10,700	8,000	8,100		75
80	10,500	10,600	10,700	8,000	8,100		80
85	10,500	10,600	10,700	8,000	7,200	7,200	85
90	10,500	10,600	10,700	7,900	7,100	7,100	90
95	10,500	10,600	10,700	7,800	7,100	7,100	95
100	10,000	10,300	10,700	7,700	7,000	6,500	100
105	9,200	9,500	9,900	7,600	6,900	6,400	105
110	8,400	8,800	9,200	7,500	6,900	6,400	110
115	7,700	8,100	8,400	7,400	6,800	6,300	115
120	7,100	7,400	7,800	6,800	6,800	6,300	120
125	6,500	6,800	7,100	6,200	6,700	6,300	125
130	5,900	6,200	6,500	5,700	6,100	6,200	130
135	5,400	5,700	5,900	5,100	5,600	6,100	135
140	4,900	5,100	5,400	4,700	5,100	5,500	140
145	4,400	4,700	4,900	4,200	4,600	5,000	145
150	3,900	4,200	4,400	3,800	4,200	4,600	150
155	3,500	3,700	4,000	3,400	3,700	4,100	155
160	3,100	3,300	3,500	3,000	3,300	3,700	160
165	2,700	2,900	3,100	2,600	2,900	3,300	165
170	2,400	2,500	2,700	2,200	2,600	2,900	170
175	2,000	2,200	2,300	1,900	2,200	2,500	175
180	1,700	1,800	2,000	1,500	1,800	2,100	180
185	1,400	1,500	1,600	1,200	1,500	1,800	185
190	1,100	1,200	1,300		1,200	1,400	190
195						1,100	195

This information is not for crane operation. Operator must refer to the in- cab information for crane operation. Rated lifting capacities shown on fully extended outriggers do not exceed 85% of the tipping loads and on tires do not exceed 75% of the tipping loads.

Courtesy of CraneMarket.com

59,000 lb Counterweight - Fully Extended Outriggers - 360° Rotation
(All Capacities Are Listed In Pounds)

195.3 ft Main Boom Length

Radius (ft)	73 ft Hydraulic Offset Fly			91 ft Hydraulic Offset Fly			109 ft Hydraulic Offset Fly			Radius (ft)
	2° - 15°	15° - 30°	30° - 45°	2° - 15°	15° - 30°	30° - 45°	2° - 15°	15° - 30°	30° - 45°	
65	6,500									65
70	6,500			5,000						70
75	6,500	6,600		5,000						75
80	6,500	6,600		5,000	5,000					80
85	6,500	6,600		5,000	5,000		3,000			85
90	6,500	6,600		5,000	5,000		3,000	3,000		90
95	6,500	6,600	6,700	5,000	5,000		3,000	3,000		95
100	6,500	6,600	6,700	5,000	4,800	4,800	3,000	3,000		100
105	6,500	6,500	5,600	5,000	4,600	4,600	3,000	3,000	3,000	105
110	6,500	6,300	5,500	5,000	4,400	3,900	3,000	2,800	2,800	110
115	5,800	6,100	5,300	4,900	4,200	3,700	3,000	2,600	2,600	115
120	5,200	5,600	5,200	4,300	4,000	3,600	2,900	2,400	2,000	120
125	4,600	5,000	5,000	3,800	3,800	3,400	2,700	2,300	2,000	125
130	4,000	4,500	4,900	3,300	3,700	3,300	2,500	2,100	1,800	130
135	3,500	3,900	4,400	2,800	3,200	3,100	2,000	1,900	1,700	135
140	3,000	3,400	3,900	2,300	2,800	3,000	1,500	1,800	1,500	140
145	2,500	2,900	3,400	1,900	2,300	2,800	1,100	1,600	1,400	145
150	2,100	2,500	3,000	1,500	1,900	2,400		1,200	1,300	150
155	1,700	2,100	2,500		1,400	1,900			1,100	155
160	1,300	1,700	2,100			1,500				160
165		1,300	1,700			1,100				165
170			1,300							170

This information is not for crane operation. Operator must refer to the in- cab information for crane operation. Rated lifting capacities shown on fully extended outriggers do not exceed 85% of the tipping loads and on tires do not exceed 75% of the tipping loads.

Courtesy of CraneMarket.com

On Tires Capacity Charts

31,400 lb Counterweight - On Tires - Stationary - Boom Centered Over Rear Between Tire Tracks
(All Capacities Are Listed In Pounds)

Radius (ft)	Main Boom Length (ft)							Radius (ft)
	42.3	55	70	85	100	115	130	
10	92,000							10
12	72,300							12
15	60,700	50,000						15
20	47,100	50,000	36,000					20
25	37,600	41,100	36,000	29,500				25
30	29,600	33,800	36,000	29,500	24,300			30
35		25,800	28,500	29,500	24,300	18,500		35
40		20,100	22,700	23,700	24,300	18,500	14,200	40
45		15,900	18,400	19,400	20,100	18,500	14,200	45
50			15,200	16,200	16,900	16,900	14,200	50
55			12,600	13,600	14,200	14,200	14,200	55
60			10,500	11,400	12,100	12,100	12,100	60
65				9,700	10,300	10,300	10,300	65
70				8,200	8,800	8,800	8,800	70
75				6,900	7,500	7,500	7,500	75
80					6,400	6,400	6,400	80
85					5,400	5,400	5,400	85
90					4,600	4,600	4,600	90
95						3,900	3,800	95
100						3,200	3,200	100
105						2,600	2,600	105
110							2,000	110
115							1,500	115

31,400 lb Counterweight - On Tires - Pick & Carry (Creep)
- Boom Centered Over Rear Between Tire Tracks
(All Capacities Are Listed In Pounds)

Radius (ft)	Main Boom Length (ft)							Radius (ft)
	42.3	55	70	85	100	115	130	
10	87,500							10
12	72,300							12
15	60,700	50,000						15
20	47,100	50,000	30,100					20
25	33,100	37,300	30,100	24,300				25
30	23,300	27,300	30,100	24,300	20,100			30
35		20,700	23,300	24,300	20,100	16,500		35
40		16,000	18,400	19,400	20,100	16,500	13,700	40
45		12,400	14,900	15,900	16,600	16,500	13,700	45
50			12,100	13,100	13,700	13,700	13,700	50
55			9,900	10,800	11,400	11,500	11,500	55
60			8,000	9,000	9,600	9,600	9,600	60
65				7,500	8,100	8,100	8,100	65
70				6,200	6,700	6,800	6,700	70
75				5,100	5,600	5,600	5,600	75
80					4,700	4,700	4,700	80
85					3,800	3,800	3,800	85
90					3,100	3,100	3,100	90
95						2,400	2,400	95
100						1,900	1,800	100

This information is not for crane operation. Operator must refer to the in- cab information for crane operation. Rated lifting capacities shown on fully extended outriggers do not exceed 85% of the tipping loads and on tires do not exceed 75% of the tipping loads.

Courtesy of CraneMarket.com

Working Range Diagram - Metric

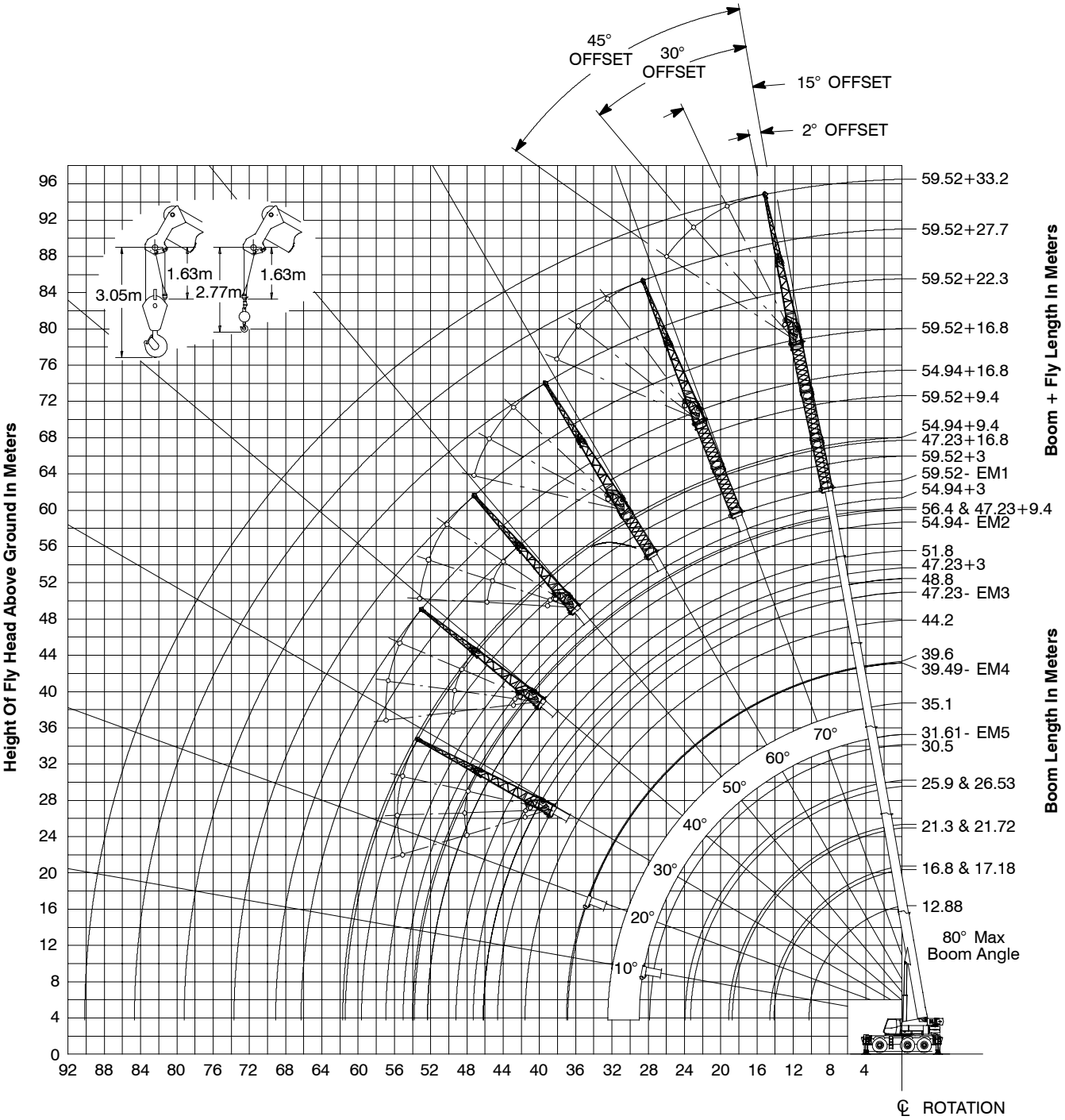

Courtesy of CraneMarket.com

Main Boom Lift Capacity Charts - 75% - Metric

15.9t Counterweight - Fully Extended Outriggers - 360° Rotation
(All Capacities Are Listed In Kilograms)

Radius (m)	Boom Length (m)															Radius (m)
	12.88	16.8-17.18	21.3-21.72	25.9-26.53	30.5-31.61	35.1	39.49-39.6	44.2	47.23	48.8	51.8	53.3	54.94	56.4	59.5	
2.5	127 000															2.5
3	114 900	71 250	68 800													3
3.5	105 300	71 250	65 600													3.5
4	97 100	71 250	64 750													4
4.5	87 450	71 250	61 450	49 950												4.5
5	78 550	71 250	58 350	49 950												5
6	64 800	66 200	53 150	47 900	36 600	27 800										6
7	54 850	56 250	48 700	44 000	36 500	27 800										7
8	47 200	48 650	45 000	40 600	33 500	27 800	22 400									8
9	40 150	42 100	41 750	37 700	30 850	27 800	21 400	20 100	16 050	13 650						9
10	32 350	34 700	34 750	34 500	29 450	27 800	21 400	20 100	16 050	13 650	12 650	11 050				10
12		24 800	25 650	25 750	25 450	24 850	18 600	18 200	16 050	13 650	12 650	11 050	11 350	8 550	7 700	12
14		18 750	20 000	19 800	19 500	18 950	16 300	16 200	14 550	13 650	12 650	11 050	11 350	8 550	7 700	14
16			16 000	15 800	15 700	15 050	14 350	14 500	12 850	12 500	12 650	11 050	11 350	8 550	7 700	16
18			13 100	13 550	13 050	12 700	12 450	12 100	11 450	11 300	11 800	10 800	11 050	8 550	7 700	18
20				11 350	11 500	11 050	10 800	10 350	9 750	10 300	10 500	9 800	9 900	8 550	7 700	20
22				9 650	9 900	9 850	9 550	9 450	8 100	9 050	8 800	8 950	8 600	8 550	7 700	22
24					8 550	8 500	8 200	8 200	6 850	7 850	7 600	7 700	7 400	7 600	7 450	24
26					7 450	7 450	7 400	7 200	5 700	7 000	6 500	6 700	6 250	6 500	6 300	26
28					4 250	6 500	6 450	6 250	4 700	6 100	5 500	5 750	5 300	5 550	5 350	28
30						5 700	5 650	5 450	3 900	5 250	4 700	4 900	4 450	4 700	4 500	30
32						4 950	4 950	4 750	3 200	4 550	3 950	4 200	3 750	4 000	3 800	32
34							4 300	4 100	2 600	3 900	3 350	3 600	3 150	3 400	3 200	34
36							3 750	3 550	2 050	3 350	2 800	3 050	2 600	2 850	2 650	36
38								3 050	1 600	2 900	2 350	2 550	2 150	2 400	2 200	38
40								2 650	1 150	2 450	1 900	2 150	1 700	1 950	1 750	40
42									800	2 100	1 550	1 750	1 350	1 550	1 400	42
44										1 750	1 200	1 400	1 000	1 200	1 050	44
46										1 450	900	1 100	700	900	750	46
48											600	850		650		48
50												600				50

Note: Capacities depict multiple boom modes.

This information is not for crane operation. Operator must refer to the in- cab information for crane operation. Rated lifting capacities shown on fully extended outriggers do not exceed 75% of the tipping loads and on tires do not exceed 65% of the tipping loads.

Courtesy of CraneMarket.com

26.7t Counterweight - Fully Extended Outriggers - 360° Rotation
(All Capacities Are Listed In Kilograms)

Radius (m)	Boom Length (m)															Radius (m)
	12.88	16.8-17.18	21.3-21.72	25.9-26.53	30.5-31.61	35.1	39.49-39.6	44.2	47.23	48.8	51.8	53.3	54.94	56.4	59.5	
2.1	145 000**															2.1
2.5	135 000*															2.5
2.5	127 000															2.5
3	116 300	71 250	68 800													3
3.5	106 650	71 250	65 600													3.5
4	98 300	71 250	64 750													4
4.5	91 100	71 250	61 450	49 950												4.5
5	84 800	71 250	58 350	49 950												5
6	70 500	69 000	53 150	47 900	36 600	27 800										6
7	59 700	61 150	48 700	44 000	36 500	27 800										7
8	51 500	52 950	45 000	40 600	33 500	27 800	22 400									8
9	45 050	46 550	41 750	37 700	30 850	27 800	21 400	20 100	16 050	13 650						9
10	39 800	41 300	38 900	35 150	29 450	27 800	21 400	20 100	16 050	13 650	12 650	11 050				10
12		32 500	32 550	30 850	28 500	26 250	18 600	18 200	16 050	13 650	12 650	11 050	11 350	8 550	7 700	12
14		24 950	25 850	25 900	25 400	23 150	16 300	16 200	14 550	13 650	12 650	11 050	11 350	8 550	7 700	14
16			20 800	20 900	20 650	20 150	14 350	14 500	12 850	12 500	12 650	11 050	11 350	8 550	7 700	16
18			17 150	17 300	17 050	16 550	12 750	13 050	11 450	11 300	11 800	10 800	11 050	8 550	7 700	18
20				14 600	14 400	13 950	11 350	11 850	10 200	10 300	10 750	9 800	9 900	8 550	7 700	20
22				12 500	12 300	11 850	10 350	10 750	9 150	9 400	9 900	8 950	8 950	8 550	7 700	22
24					10 850	10 200	9 450	9 800	8 250	8 600	9 050	8 200	8 100	8 200	7 700	24
26					9 450	9 300	8 650	8 700	7 450	7 900	8 350	7 550	7 350	7 450	7 100	26
28					7 000	8 150	7 900	7 650	6 700	7 300	7 700	6 950	6 650	6 800	6 450	28
30						7 500	7 250	6 850	6 050	6 750	7 100	6 450	6 050	6 200	5 850	30
32						7 000	6 750	6 350	5 500	6 250	6 350	5 950	5 500	5 650	5 300	32
34							6 300	5 900	4 800	5 800	5 550	5 550	5 000	5 150	4 850	34
36							5 600	5 500	4 100	5 100	4 900	5 150	4 550	4 700	4 400	36
38								5 000	3 550	4 500	4 300	4 500	4 100	4 300	4 000	38
40								4 500	3 000	4 150	3 750	4 000	3 550	3 800	3 600	40
42									2 550	3 800	3 300	3 500	3 100	3 300	3 150	42
44									2 100	3 400	2 850	3 100	2 650	2 900	2 700	44
46										3 000	2 450	2 700	2 250	2 500	2 300	46
48											2 100	2 350	1 900	2 150	1 950	48
50												2 050	1 600	1 850	1 650	50
52													1 300	1 550	1 350	52
54															1 100	54
56															850	56

Note: Capacities depict multiple boom modes.
* Over front only
** Over front only on intermediate outriggers and special equipment required

This information is not for crane operation. Operator must refer to the in- cab information for crane operation. Rated lifting capacities shown on fully extended outriggers do not exceed 75% of the tipping loads and on tires do not exceed 65% of the tipping loads.

Courtesy of CraneMarket.com

Manual Offset Fly Attachment Lift Capacity Charts - 75% - Optional - Metric

15.9t Counterweight - Fully Extended Outriggers - 360° Rotation
(All Capacities Are Listed In Kilograms)

Radius (m)	Main Boom + 3m Manual Offset Fly (2°, 15°, 30°, 45° Offsets)								Radius (m)
	Boom Length (m)								
	12.88	16.8- 17.18	21.3- 21.72	25.9- 26.53	30.5- 31.61	35.1	39.49- 39.6	44.2	
3	23 500	23 500							3
3.5	21 500	23 500	23 500						3.5
4	21 250	23 500	23 500						4
4.5	21 050	21 200	23 500	23 500					4.5
5	20 850	21 000	23 400	23 500					5
6	20 500	20 700	20 800	20 600	23 200				6
7	20 300	20 450	20 550	20 400	23 200				7
8	20 150	20 250	20 300	20 200	19 600	20 800	18 250		8
9	20 150	20 100	20 150	20 050	19 450	19 000	18 250	16 350	9
10	20 150	20 050	20 000	19 900	19 350	18 900	18 100	16 350	10
12	20 150	20 050	19 900	19 700	17 200	16 950	15 900	16 350	12
14		19 700	19 900	19 650	15 400	15 150	14 200	14 700	14
16		15 700	16 000	15 950	13 850	13 600	12 700	13 300	16
18			13 450	13 100	12 550	12 250	11 450	12 050	18
20			11 300	11 500	10 850	10 600	10 300	9 900	20
22				9 800	9 700	9 150	8 900	8 600	22
24				8 400	8 400	8 400	8 100	7 900	24
26				7 350	7 450	7 350	7 050	7 050	26
28					6 500	6 400	6 250	6 100	28
30					5 700	5 600	5 500	5 250	30
32						4 900	4 800	4 550	32
34						4 250	4 200	3 900	34
36							3 650	3 400	36
38							3 150	2 900	38
40							2 750	2 500	40
42								2 100	42
44								1 750	44

This information is not for crane operation. Operator must refer to the in- cab information for crane operation. Rated lifting capacities shown on fully extended outriggers do not exceed 75% of the tipping loads and on tires do not exceed 65% of the tipping loads.

Courtesy of CraneMarket.com

15.9t Counterweight - Fully Extended Outriggers - 360° Rotation

(All Capacities Are Listed In Kilograms)

Radius (m)	Main Boom + 3m Manual Offset Fly (2°, 15°, 30°, 45° Offsets)							Radius (m)
	Boom Length (m)							
	47.23	48.8	51.8	53.3	54.94	56.4	59.5	
10	13 000	10 950		6 950				10
12	13 000	10 950	10 150	6 950	8 950	6 450	5 650	12
14	13 000	10 950	10 150	6 950	8 950	6 450	5 650	14
16	12 150	10 950	10 150	6 950	8 950	6 450	5 650	16
18	10 750	10 400	10 150	6 950	8 950	6 450	5 650	18
20	9 600	9 400	9 750	6 950	8 950	6 450	5 650	20
22	8 050	8 600	8 650	6 950	8 300	6 450	5 650	22
24	6 750	7 650	7 450	6 950	7 250	6 450	5 650	24
26	5 600	6 550	6 300	6 500	6 050	6 300	5 650	26
28	4 600	5 850	5 300	5 500	5 050	5 300	5 100	28
30	3 800	5 050	4 450	4 700	4 250	4 450	4 250	30
32	3 100	4 300	3 750	4 000	3 550	3 750	3 550	32
34	2 450	3 700	3 150	3 350	2 900	3 150	2 950	34
36	1 950	3 150	2 600	2 800	2 400	2 600	2 400	36
38	1 450	2 650	2 150	2 350	1 900	2 100	1 900	38
40	1 050	2 250	1 700	1 900	1 500	1 700	1 500	40
42	700	1 850	1 350	1 550	1 100	1 350	1 150	42
44		1 550	1 000	1 200	800	1 000	800	44
46		1 250	700	900	500	700	500	46
48		950		600				48

This information is not for crane operation. Operator must refer to the in- cab information for crane operation. Rated lifting capacities shown on fully extended outriggers do not exceed 75% of the tipping loads and on tires do not exceed 65% of the tipping loads.

Courtesy of CraneMarket.com

26.7t Counterweight - Fully Extended Outriggers - 360° Rotation

(All Capacities Are Listed In Kilograms)

Radius (m)	Main Boom + 3m Manual Offset Fly (2°, 15°, 30°, 45° Offsets)								Radius (m)
	Boom Length (m)								
	12.88	16.8- 17.18	21.3- 21.72	25.9- 26.53	30.5- 31.61	35.1	39.49- 39.6	44.2	
3	23 500	23 500							3
3.5	21 500	23 500	23 500						3.5
4	21 250	23 500	23 500						4
4.5	21 050	21 200	23 500	23 500					4.5
5	20 850	21 000	23 400	23 500					5
6	20 500	20 700	20 800	20 600	23 200				6
7	20 300	20 450	20 550	20 400	23 200				7
8	20 150	20 250	20 300	20 200	19 600	20 800	18 250		8
9	20 150	20 100	20 150	20 050	19 450	19 000	18 250	16 350	9
10	20 150	20 050	20 000	19 900	19 350	18 900	18 100	16 350	10
12	20 150	20 050	19 900	19 700	17 200	16 950	15 900	16 350	12
14		20 050	19 900	19 650	15 400	15 150	14 200	14 700	14
16		19 850	19 900	19 650	13 850	13 600	12 700	13 300	16
18			17 550	17 500	12 550	12 250	11 450	12 100	18
20			14 850	14 800	11 450	11 100	10 350	11 050	20
22				12 700	10 500	10 100	9 450	10 000	22
24				11 000	9 700	9 250	8 600	9 100	24
26				9 600	8 950	8 500	7 850	8 300	26
28					8 350	7 850	7 300	7 600	28
30					7 400	7 200	6 700	6 550	30
32						6 300	6 050	5 700	32
34						5 850	5 600	5 300	34
36							5 250	4 900	36
38							4 900	4 550	38
40							4 400	4 250	40
42								3 850	42
44								2 200	44

This information is not for crane operation. Operator must refer to the in- cab information for crane operation. Rated lifting capacities shown on fully extended outriggers do not exceed 75% of the tipping loads and on tires do not exceed 65% of the tipping loads.

Courtesy of CraneMarket.com

26.7t Counterweight - Fully Extended Outriggers - 360° Rotation

(All Capacities Are Listed In Kilograms)

Radius (m)	Main Boom + 3m Manual Offset Fly (2°, 15°, 30°, 45° Offsets)							Radius (m)
	Boom Length (m)							
	47.23	48.8	51.8	53.3	54.94	56.4	59.5	
10	13 000	10 950		6 950				10
12	13 000	10 950	10 150	6 950	8 950	6 450	5 650	12
14	13 000	10 950	10 150	6 950	8 950	6 450	5 650	14
16	12 150	10 950	10 150	6 950	8 950	6 450	5 650	16
18	10 750	10 400	10 150	6 950	8 950	6 450	5 650	18
20	9 600	9 400	9 750	6 950	8 950	6 450	5 650	20
22	8 550	8 600	8 950	6 950	8 300	6 450	5 650	22
24	7 750	7 800	8 200	6 950	7 500	6 450	5 650	24
26	6 950	7 200	7 600	6 850	6 800	6 450	5 650	26
28	6 250	6 650	7 000	6 300	6 150	6 200	5 650	28
30	5 600	6 100	6 450	5 750	5 550	5 650	5 300	30
32	5 050	5 650	5 950	5 300	5 000	5 100	4 800	32
34	4 550	5 200	5 350	4 900	4 550	4 650	4 300	34
36	4 000	4 800	4 650	4 500	4 100	4 200	3 900	36
38	3 400	4 300	4 100	4 150	3 700	3 800	3 500	38
40	2 900	3 800	3 550	3 750	3 300	3 450	3 150	40
42	2 450	3 300	3 100	3 300	2 850	3 050	2 800	42
44	2 000	3 050	2 650	2 850	2 450	2 650	2 450	44
46	1 600	2 800	2 300	2 450	2 050	2 250	2 050	46
48		2 450	1 950	2 150	1 700	1 900	1 700	48
50			1 600	1 800	1 400	1 600	1 400	50
52			1 100	1 500	1 100	1 300	1 100	52
54					800	1 050	850	54
56						750	600	56

This information is not for crane operation. Operator must refer to the in- cab information for crane operation. Rated lifting capacities shown on fully extended outriggers do not exceed 75% of the tipping loads and on tires do not exceed 65% of the tipping loads.

Courtesy of CraneMarket.com

15.9t Counterweight - Fully Extended Outriggers - 360° Rotation
(All Capacities Are Listed In Kilograms)

59.5m Main Boom Length									
Radius (m)	9.4m Manual Offset Fly				16.8m Manual Offset Fly				Radius (m)
	2°	15°	30°	45°	2°	15°	30°	45°	
16	4 900								16
18	4 900	4 900			3 750				18
20	4 900	4 900			3 750				20
22	4 900	4 900	4 950		3 750				22
24	4 900	4 900	4 950	5 050	3 750	3 800			24
26	4 900	4 900	4 950	5 050	3 750	3 700			26
28	4 900	4 900	4 950	5 050	3 750	3 650	3 350		28
30	4 400	4 750	4 950	5 050	3 750	3 600	3 300		30
32	3 650	4 000	4 300	4 550	3 750	3 550	3 250	3 050	32
34	3 050	3 350	3 650	3 850	3 400	3 500	3 200	3 050	34
36	2 500	2 800	3 050	3 250	2 850	3 300	3 200	3 050	36
38	2 050	2 300	2 500	2 700	2 350	2 800	3 150	3 000	38
40	1 600	1 850	2 050	2 200	1 950	2 350	2 700	3 000	40
42	1 250	1 450	1 650	1 750	1 550	1 900	2 300	2 550	42
44	900	1 100	1 250	1 350	1 200	1 550	1 850	2 100	44
46	600	750	900	1 000	900	1 200	1 500	1 700	46
48			600	650	600	900	1 150	1 350	48
50						600	850	1 000	50
52							600	700	52

This information is not for crane operation. Operator must refer to the in- cab information for crane operation. Rated lifting capacities shown on fully extended outriggers do not exceed 75% of the tipping loads and on tires do not exceed 65% of the tipping loads.

Courtesy of CraneMarket.com

26.7t Counterweight - Fully Extended Outriggers - 360° Rotation
(All Capacities Are Listed In Kilograms)

59.5m Main Boom Length

Radius (m)	9.4m Manual Offset Fly				16.8m Manual Offset Fly				Radius (m)
	2°	15°	30°	45°	2°	15°	30°	45°	
16	4 900								16
18	4 900	4 900			3 750				18
20	4 900	4 900			3 750				20
22	4 900	4 900	4 950		3 750				22
24	4 900	4 900	4 950	5 050	3 750	3 800			24
26	4 900	4 900	4 950	5 050	3 750	3 700			26
28	4 900	4 900	4 950	5 050	3 750	3 650	3 350		28
30	4 900	4 900	4 950	5 050	3 750	3 600	3 300		30
32	4 550	4 750	4 900	5 050	3 750	3 550	3 250	3 050	32
34	4 150	4 300	4 450	4 600	3 750	3 500	3 200	3 050	34
36	3 750	3 900	4 050	4 150	3 600	3 450	3 200	3 050	36
38	3 350	3 500	3 650	3 750	3 250	3 400	3 150	3 000	38
40	3 050	3 150	3 300	3 400	2 900	3 100	3 150	3 000	40
42	2 750	2 850	2 950	3 050	2 600	2 800	3 000	3 000	42
44	2 450	2 550	2 650	2 750	2 350	2 550	2 700	2 850	44
46	2 150	2 300	2 400	2 450	2 100	2 250	2 450	2 550	46
48	1 800	1 950	2 100	2 150	1 850	2 000	2 150	2 300	48
50	1 500	1 650	1 750	1 800	1 600	1 800	1 950	2 050	50
52	1 200	1 350	1 450	1 500	1 400	1 550	1 700	1 800	52
54	950	1 050	1 150		1 200	1 350	1 500	1 550	54
56	700	800	850		950	1 150	1 250	1 350	56
58		550	600		750	950	1 050	1 150	58
60					550	700	850	850	60
62						500	600	600	62

26.7t Counterweight - Fully Extended Outriggers - 360° Rotation
(All Capacities Are Listed In Kilograms)

59.5m Main Boom Length

Radius (m)	22.3m Manual Offset Fly				27.7m Manual Offset Fly				33.2m Manual Offset Fly				Radius (m)
	2°	15°	30°	45°	2°	15°	30°	45°	2°	15°	30°	45°	
20	3 050												20
22	3 050				2 350								22
24	3 050	3 100			2 350								24
26	3 050	3 100			2 350	2 350			1 400				26
28	3 050	3 100	3 000		2 350	2 350			1 400	1 400			28
30	3 050	3 100	3 000		2 350	2 350	2 400		1 400	1 400			30
32	3 050	3 100	3 000	2 900	2 350	2 350	2 400		1 400	1 400	1 400		32
34	3 050	3 100	3 000	2 800	2 350	2 350	2 350	2 150	1 400	1 400	1 400		34
36	2 900	3 100	3 000	2 700	2 350	2 350	2 250	2 050	1 400	1 400	1 350		36
38	2 550	2 750	2 950	2 650	2 200	2 350	2 100	1 950	1 400	1 400	1 250	1 150	38
40	2 200	2 400	2 650	2 550	1 900	2 100	2 050	1 850	1 300	1 300	1 150	1 050	40
42	1 900	2 100	2 300	2 500	1 600	1 800	1 950	1 800	1 050	1 200	1 050	950	42
44	1 650	1 800	2 000	2 200	1 350	1 550	1 750	1 700		950	950	850	44
46	1 400	1 550	1 750	1 900	1 100	1 300	1 500	1 650		700	900	800	46
48	1 150	1 300	1 500	1 650	900	1 050	1 250	1 400		500	700	750	48
50	950	1 100	1 250	1 400	650	850	1 000	1 150				600	50
52	700	850	1 050	1 150		600	800	950					52
54	550	650	800	950			600	700					54
56			600	700				500					56
58				500									58

This information is not for crane operation. Operator must refer to the in- cab information for crane operation. Rated lifting capacities shown on fully extended outriggers do not exceed 75% of the tipping loads and on tires do not exceed 65% of the tipping loads.

Courtesy of CraneMarket.com

Hydraulic Offset Fly Attachment Lift Capacity Charts - 75% - Optional - Metric

15.9t Counterweight - Fully Extended Outriggers - 360° Rotation
(All Capacities Are Listed In Kilograms)

Main Boom + 3m Hydraulic Offset Fly (2° - 45° Offsets)

Radius (m)	Main Boom Length (m)															Radius (m)
	12.88	16.8-17.18	21.3-21.72	25.9-26.53	30.5-31.61	35.1	39.49-39.6	44.2	47.23	48.8	51.8	53.3	54.94	56.4	59.5	
3	23 500	23 500														3
3.5	21 450	23 500	23 500													3.5
4	21 200	23 500	23 500													4
4.5	20 950	21 150	23 500	23 500												4.5
5	20 750	20 950	23 300	23 500												5
6	20 450	20 600	20 700	20 550	23 100											6
7	20 200	20 350	20 450	20 300	23 100											7
8	20 100	20 150	20 250	20 150	19 500	20 700	18 150									8
9	20 100	20 050	20 100	20 000	19 400	18 900	18 150	16 250								9
10	20 100	20 000	19 950	19 850	19 300	18 850	17 950	16 250	12 950	10 900		6 900				10
12	20 100	20 000	19 850	19 650	17 000	16 800	15 700	16 200	12 950	10 900	10 100	6 900	8 900	6 400	5 600	12
14		19 550	19 850	19 600	15 250	15 000	14 000	14 550	12 950	10 900	10 100	6 900	8 900	6 400	5 600	14
16		15 550	15 900	15 800	13 700	13 400	12 550	13 150	11 950	10 900	10 100	6 900	8 900	6 400	5 600	16
18			13 300	12 950	12 400	12 050	11 250	11 900	10 600	10 200	10 100	6 900	8 900	6 400	5 600	18
20			11 150	11 350	10 700	10 450	10 150	9 750	9 400	9 250	9 600	6 900	8 900	6 400	5 600	20
22				9 650	9 500	8 950	8 700	8 400	7 900	8 400	8 500	6 900	8 100	6 400	5 600	22
24				8 300	8 250	8 200	7 950	7 750	6 550	7 500	7 300	6 900	7 050	6 400	5 600	24
26				7 200	7 300	7 200	6 900	6 900	5 400	6 350	6 100	6 350	5 900	6 100	5 600	26
28					6 400	6 250	6 050	5 900	4 450	5 700	5 100	5 350	4 900	5 100	4 900	28
30					5 500	5 450	5 350	5 100	3 600	4 850	4 300	4 500	4 050	4 300	4 100	30
32						4 700	4 600	4 350	2 900	4 150	3 600	3 800	3 350	3 550	3 350	32
34						4 100	4 000	3 750	2 300	3 500	2 950	3 200	2 750	2 950	2 750	34
36							3 450	3 200	1 750	2 950	2 400	2 650	2 200	2 400	2 200	36
38							2 950	2 700	1 300	2 500	1 950	2 150	1 750	1 950	1 750	38
40							2 550	2 300	900	2 050	1 550	1 750	1 300	1 500	1 300	40
42								1 900	500	1 700	1 150	1 350	950	1 150	950	42
44								1 550		1 350	800	1 000	600	800	600	44
46										1 050	500	700		500		46
48										750						48

This information is not for crane operation. Operator must refer to the in- cab information for crane operation. Rated lifting capacities shown on fully extended outriggers do not exceed 75% of the tipping loads and on tires do not exceed 65% of the tipping loads.

Courtesy of CraneMarket.com

26.7t Counterweight - Fully Extended Outriggers - 360° Rotation
(All Capacities Are Listed In Kilograms)

Main Boom + 3m Hydraulic Offset Fly (2° - 45° Offsets)

Radius (m)	Main Boom Length (m)															Radius (m)
	12.88	16.8-17.18	21.3-21.72	25.9-26.53	30.5-31.61	35.1	39.49-39.6	44.2	47.23	48.8	51.8	53.3	54.94	56.4	59.5	
3	23 500	23 500														3
3.5	21 450	23 500	23 500													3.5
4	21 200	23 500	23 500													4
4.5	20 950	21 150	23 500	23 500												4.5
5	20 750	20 950	23 300	23 500												5
6	20 450	20 600	20 700	20 550	23 100											6
7	20 200	20 350	20 450	20 300	23 100											7
8	20 100	20 150	20 250	20 150	19 500	20 700	18 150									8
9	20 100	20 050	20 100	20 000	19 400	18 900	18 150	16 250								9
10	20 100	20 000	19 950	19 850	19 300	18 850	17 950	16 250	12 950	10 900		6 900				10
12	20 100	20 000	19 850	19 650	17 000	16 800	15 700	16 200	12 950	10 900	10 100	6 900	8 900	6 400	5 600	12
14		20 000	19 850	19 600	15 250	15 000	14 000	14 550	12 950	10 900	10 100	6 900	8 900	6 400	5 600	14
16		19 650	19 850	19 600	13 700	13 400	12 550	13 150	11 950	10 900	10 100	6 900	8 900	6 400	5 600	16
18			17 400	17 350	12 400	12 050	11 250	11 900	10 600	10 200	10 100	6 900	8 900	6 400	5 600	18
20			14 700	14 650	11 250	10 900	10 200	10 850	9 400	9 250	9 600	6 900	8 900	6 400	5 600	20
22				12 550	10 300	9 950	9 250	9 800	8 350	8 400	8 750	6 900	8 100	6 400	5 600	22
24				10 850	9 500	9 050	8 400	8 900	7 550	7 700	8 000	6 900	7 350	6 400	5 600	24
26				9 450	8 750	8 300	7 750	8 100	6 750	7 050	7 400	6 650	6 600	6 400	5 600	26
28					8 150	7 700	7 100	7 400	6 050	6 450	6 800	6 100	5 950	6 000	5 600	28
30					7 250	7 050	6 500	6 350	5 400	5 900	6 300	5 600	5 350	5 450	5 100	30
32						6 150	5 850	5 550	4 850	5 450	5 800	5 100	4 800	4 900	4 600	32
34						5 650	5 400	5 100	4 350	5 000	5 150	4 700	4 350	4 450	4 100	34
36							5 050	4 700	3 850	4 600	4 500	4 300	3 900	4 000	3 700	36
38							4 700	4 350	3 250	4 150	3 900	4 000	3 500	3 600	3 300	38
40							4 200	4 050	2 700	3 600	3 350	3 600	3 100	3 250	2 950	40
42								3 650	2 250	3 150	2 900	3 100	2 700	2 900	2 600	42
44								2 000	1 850	2 850	2 450	2 700	2 250	2 450	2 250	44
46									1 450	2 600	2 100	2 300	1 900	2 100	1 900	46
48										2 250	1 750	1 950	1 550	1 750	1 550	48
50											1 400	1 650	1 200	1 400	1 200	50
52											900	1 350	950	1 150	950	52
54													650	850	650	54
56														600		56

This information is not for crane operation. Operator must refer to the in- cab information for crane operation. Rated lifting capacities shown on fully extended outriggers do not exceed 75% of the tipping loads and on tires do not exceed 65% of the tipping loads.

Courtesy of CraneMarket.com

15.9t Counterweight - Fully Extended Outriggers - 360° Rotation
(All Capacities Are Listed In Kilograms)

59.5m Main Boom Length							
Radius (m)	9.4m Hydraulic Offset Fly			16.8m Hydraulic Offset Fly			Radius (m)
	2° - 15°	15° - 30°	30° - 45°	2° - 15°	15° - 30°	30° - 45°	
16	4 800						16
18	4 800	4 800		3 650			18
20	4 800	4 800		3 650			20
22	4 800	4 800	4 850	3 650			22
24	4 800	4 800	4 850	3 650	3 650		24
26	4 800	4 800	4 850	3 600	3 600		26
28	4 800	4 800	4 850	3 550	3 250	3 250	28
30	4 250	4 600	4 850	3 500	3 200	3 200	30
32	3 500	3 850	4 200	3 450	3 150	2 900	32
34	2 900	3 200	3 500	3 250	3 100	2 900	34
36	2 350	2 650	2 900	2 700	3 100	2 850	36
38	1 900	2 150	2 400	2 200	2 650	2 850	38
40	1 450	1 700	1 900	1 800	2 200	2 600	40
42	1 100	1 300	1 500	1 400	1 800	2 150	42
44	750	950	1 100	1 050	1 400	1 750	44
46		600	750	750	1 050	1 400	46
48					750	1 050	48
50					500	750	50

This information is not for crane operation. Operator must refer to the in- cab information for crane operation. Rated lifting capacities shown on fully extended outriggers do not exceed 75% of the tipping loads and on tires do not exceed 65% of the tipping loads.

Courtesy of CraneMarket.com

26.7t Counterweight - Fully Extended Outriggers - 360° Rotation
(All Capacities Are Listed In Kilograms)

59.5m Main Boom Length

Radius (m)	9.4m Hydraulic Offset Fly			16.8m Hydraulic Offset Fly			Radius (m)
	2° - 15°	15° - 30°	30° - 45°	2° - 15°	15° - 30°	30° - 45°	
16	4 800						16
18	4 800	4 800		3 650			18
20	4 800	4 800		3 650			20
22	4 800	4 800	4 850	3 650			22
24	4 800	4 800	4 850	3 650	3 650		24
26	4 800	4 800	4 850	3 600	3 600		26
28	4 800	4 800	4 850	3 550	3 250	3 250	28
30	4 650	4 800	4 850	3 500	3 200	3 200	30
32	4 150	4 350	4 500	3 450	3 150	2 900	32
34	3 700	3 900	4 050	3 400	3 100	2 900	34
36	3 300	3 500	3 650	3 200	3 100	2 850	36
38	2 950	3 100	3 250	2 850	3 050	2 850	38
40	2 600	2 750	2 900	2 500	2 700	2 800	40
42	2 300	2 450	2 550	2 200	2 400	2 600	42
44	2 000	2 150	2 250	1 950	2 100	2 300	44
46	1 750	1 850	1 950	1 650	1 850	2 050	46
48	1 500	1 600	1 700	1 450	1 600	1 750	48
50	1 250	1 350	1 450	1 200	1 350	1 500	50
52	1 050	1 150	1 200	1 000	1 150	1 300	52
54	800	900	1 000	800	900	1 050	54
56	550	650	700	600	700	850	56
58					500	650	58

26.7t Counterweight - Fully Extended Outriggers - 360° Rotation
(All Capacities Are Listed In Kilograms)

59.5m Main Boom Length

Radius (m)	22.3m Hydraulic Offset Fly			27.7m Hydraulic Offset Fly			33.2m Hydraulic Offset Fly			Radius (m)
	2° - 15°	15° - 30°	30° - 45°	2° - 15°	15° - 30°	30° - 45°	2° - 15°	15° - 30°	30° - 45°	
20	2 950									20
22	2 950			2 250						22
24	2 950	3 000		2 250	2 250		1 350			24
26	2 950	3 000		2 250	2 250		1 350			26
28	2 950	3 000	3 000	2 250	2 250		1 350	1 350		28
30	2 950	3 000	3 000	2 250	2 150	2 150	1 350	1 350		30
32	2 950	2 950	2 550	2 250	2 100	2 100	1 350	1 350	1 350	32
34	2 850	2 800	2 450	2 250	1 950	1 750	1 350	1 250	1 250	34
36	2 450	2 650	2 350	2 050	1 850	1 650	1 350	1 150	900	36
38	2 100	2 300	2 300	1 750	1 750	1 550	1 200	1 050	900	38
40	1 750	1 950	2 200	1 450	1 650	1 450	1 100	950	800	40
42	1 450	1 650	1 900	1 150	1 350	1 400	800	850	700	42
44	1 200	1 350	1 600	850	1 050	1 300		750	650	44
46	900	1 100	1 300	600	800	1 050		500	550	46
48	700	850	1 050		550	750				48
50		600	800			500				50
52			550							52

This information is not for crane operation. Operator must refer to the in- cab information for crane operation. Rated lifting capacities shown on fully extended outriggers do not exceed 75% of the tipping loads and on tires do not exceed 65% of the tipping loads.

Courtesy of CraneMarket.com

On Tires Capacity Charts - 75%

14.3t Counterweight - On Tires - Stationary - Boom Centered Over Rear Between Tire Tracks
(All Capacities Are Listed In Kilograms)

Radius (m)	Main Boom Length (m)							Radius (m)
	12.88	16.8	21.3	25.9	30.5	35.1	39.6	
3	41,700							3
3.5	33,900							3.5
4	30,650							4
4.5	27,900	22,650						4.5
5	25,550	22,650						5
6	21,700	22,650	16,300					6
7	18,650	20,250	16,300					7
8	15,000	16,700	16,300	13,350				8
9	12,000	13,650	14,750	13,350	11,000			9
10	9,700	11,350	12,450	12,800	11,000	8,350		10
12		8,150	9,150	9,550	9,750	8,350	6,400	12
14		6,000	7,000	7,400	7,650	7,650	6,400	14
16			5,450	5,800	6,050	6,050	6,050	16
18			4,250	4,650	4,900	4,900	4,850	18
20				3,700	3,950	3,950	3,950	20
22				3,000	3,200	3,200	3,200	22
24					2,600	2,600	2,600	24
26					2,050	2,050	2,050	26
28						1,550	1,550	28
30						1,150	1,150	30
32						800	750	32

14.3t Counterweight - On Tires - Pick & Carry (Creep) - Boom Centered Over Rear Between Tire Tracks
(All Capacities Are Listed In Kilograms)

Radius (m)	Main Boom Length (m)							Radius (m)
	12.88	16.8	21.3	25.9	30.5	35.1	39.6	
3	39,650							3
3.5	32,750							3.5
4	27,500							4
4.5	27,500	22,650						4.5
5	27,150	22,650						5
6	20,000	21,800	13,650					6
7	15,200	16,900	13,650					7
8	11,850	13,500	13,650	11,000				8
9	9,450	11,050	12,100	11,000	9,100			9
10	7,600	9,150	10,200	10,600	9,100	7,450		10
12		6,500	7,500	7,850	8,050	7,450	6,200	12
14		4,650	5,600	6,000	6,250	6,250	6,200	14
16			4,300	4,650	4,900	4,900	4,900	16
18			3,250	3,650	3,900	3,900	3,900	18
20				2,850	3,100	3,100	3,100	20
22				2,150	2,450	2,450	2,450	22
24					1,850	1,850	1,850	24
26					1,350	1,350	1,350	26
28						900	900	28
30						550	500	30

This information is not for crane operation. Operator must refer to the in- cab information for crane operation. Rated lifting capacities shown on fully extended outriggers do not exceed 75% of the tipping loads and on tires do not exceed 65% of the tipping loads.

Courtesy of CraneMarket.com

Main Boom Lift Capacity Charts - 85% - Metric

15.9t Counterweight - Fully Extended Outriggers - 360° Rotation
(All Capacities Are Listed In Kilograms)

Radius (m)	Boom Length (m)															Radius (m)
	12.88	16.8-17.18	21.3-21.72	25.9-26.53	30.5-31.61	35.1	39.49-39.6	44.2	47.23	48.8	51.8	53.3	54.94	56.4	59.5	
2.5	127 000															2.5
3	114 900	71 250	68 800													3
3.5	105 300	71 250	65 600													3.5
4	97 100	71 250	64 750													4
4.5	87 450	71 250	61 450	49 950												4.5
5	78 550	71 250	58 350	49 950												5
6	64 800	66 200	53 150	47 900	36 600	27 800										6
7	54 850	56 250	48 700	44 000	36 500	27 800										7
8	47 200	48 650	45 000	40 600	33 500	27 800	22 400									8
9	41 200	42 700	41 750	37 700	30 850	27 800	21 400	20 100	16 050	13 650						9
10	36 350	37 850	38 300	35 150	29 450	27 800	21 400	20 100	16 050	13 650	12 650	11 050				10
12		28 100	29 100	29 200	28 500	26 250	18 600	18 200	16 050	13 650	12 650	11 050	11 350	8 550	7 700	12
14		21 300	22 300	22 450	22 100	21 500	16 300	16 200	14 550	13 650	12 650	11 050	11 350	8 550	7 700	14
16			18 100	17 900	17 600	17 000	14 350	14 500	12 850	12 500	12 650	11 050	11 350	8 550	7 700	16
18			14 850	14 650	14 400	13 850	12 750	13 050	11 450	11 300	11 800	10 800	11 050	8 550	7 700	18
20				12 900	12 250	12 000	11 350	11 350	10 200	10 300	10 750	9 800	9 900	8 550	7 700	20
22				10 950	11 000	10 150	9 900	9 450	9 150	9 400	9 900	8 950	8 950	8 550	7 700	22
24					9 550	9 350	9 100	8 700	7 750	8 600	8 500	8 200	8 100	8 200	7 700	24
26					8 400	8 400	8 100	8 000	6 600	7 600	7 350	7 550	7 150	7 400	7 100	26
28					5 150	7 350	7 100	7 100	5 550	6 600	6 350	6 600	6 150	6 350	6 150	28
30						6 450	6 450	6 250	4 700	6 050	5 450	5 700	5 250	5 500	5 300	30
32						5 700	5 650	5 450	3 950	5 250	4 700	4 950	4 500	4 750	4 550	32
34							5 000	4 800	3 300	4 600	4 050	4 300	3 850	4 100	3 900	34
36							4 450	4 200	2 750	4 050	3 500	3 700	3 300	3 500	3 300	36
38								3 700	2 250	3 500	3 000	3 200	2 800	3 000	2 800	38
40								3 250	1 800	3 050	2 550	2 750	2 350	2 550	2 400	40
42									1 400	2 650	2 150	2 350	1 950	2 150	2 000	42
44									1 050	2 300	1 750	2 000	1 600	1 800	1 600	44
46										2 000	1 450	1 650	1 250	1 500	1 300	46
48											1 150	1 400	950	1 200	1 000	48
50												1 100	700	900	750	50
52														650		52

Note: Capacities depict multiple boom modes.

This information is not for crane operation. Operator must refer to the in- cab information for crane operation. Rated lifting capacities shown on fully extended outriggers do not exceed 85% of the tipping loads and on tires do not exceed 75% of the tipping loads.

Courtesy of CraneMarket.com

26.7t Counterweight - Fully Extended Outriggers - 360° Rotation
(All Capacities Are Listed In Kilograms)

Radius (m)	Boom Length (m)															Radius (m)
	12.88	16.8-17.18	21.3-21.72	25.9-26.53	30.5-31.61	35.1	39.49-39.6	44.2	47.23	48.8	51.8	53.3	54.94	56.4	59.5	
2.1	145 000**															2.1
2.5	135 000*															2.5
2.5	127 000															2.5
3	116 300	71 250	68 800													3
3.5	106 650	71 250	65 600													3.5
4	98 300	71 250	64 750													4
4.5	91 100	71 250	61 450	49 950												4.5
5	84 800	71 250	58 350	49 950												5
6	70 500	69 000	53 150	47 900	36 600	27 800										6
7	59 700	61 150	48 700	44 000	36 500	27 800										7
8	51 500	52 950	45 000	40 600	33 500	27 800	22 400									8
9	45 050	46 550	41 750	37 700	30 850	27 800	21 400	20 100	16 050	13 650						9
10	39 800	41 300	38 900	35 150	29 450	27 800	21 400	20 100	16 050	13 650	12 650	11 050				10
12		33 750	33 900	30 850	28 500	26 250	18 600	18 200	16 050	13 650	12 650	11 050	11 350	8 550	7 700	12
14		27 750	28 850	27 500	25 400	23 150	16 300	16 200	14 550	13 650	12 650	11 050	11 350	8 550	7 700	14
16			23 600	23 650	22 800	20 600	14 350	14 500	12 850	12 500	12 650	11 050	11 350	8 550	7 700	16
18			19 450	19 650	19 350	18 500	12 750	13 050	11 450	11 300	11 800	10 800	11 050	8 550	7 700	18
20				16 550	16 300	15 750	11 350	11 850	10 200	10 300	10 750	9 800	9 900	8 550	7 700	20
22				14 150	13 950	13 450	10 350	10 750	9 150	9 400	9 900	8 950	8 950	8 550	7 700	22
24					12 050	11 550	9 450	9 800	8 250	8 600	9 050	8 200	8 100	8 200	7 700	24
26					10 450	10 000	8 650	8 950	7 450	7 900	8 350	7 550	7 350	7 450	7 100	26
28					8 050	8 700	8 000	8 150	6 700	7 300	7 700	6 950	6 650	6 800	6 450	28
30						8 000	7 400	7 450	6 050	6 750	7 100	6 450	6 050	6 200	5 850	30
32						7 200	6 800	6 700	5 500	6 250	6 550	5 950	5 500	5 650	5 300	32
34							6 350	5 900	4 950	5 800	6 050	5 550	5 000	5 150	4 850	34
36							5 950	5 500	4 500	5 400	5 600	5 150	4 550	4 700	4 400	36
38								5 150	4 050	5 050	5 050	4 750	4 150	4 300	4 000	38
40								4 850	3 650	4 700	4 500	4 450	3 800	3 950	3 600	40
42									3 250	4 200	4 000	4 150	3 400	3 600	3 250	42
44									2 800	3 750	3 550	3 750	3 100	3 250	2 950	44
46										3 350	3 100	3 350	2 800	3 000	2 650	46
48											2 750	3 000	2 550	2 700	2 400	48
50												2 650	2 200	2 450	2 150	50
52													1 900	2 150	1 900	52
54															1 650	54
56															1 400	56

Note: Capacities depict multiple boom modes.
* Over front only
** Over front only on intermediate outriggers and special equipment required

This information is not for crane operation. Operator must refer to the in- cab information for crane operation. Rated lifting capacities shown on fully extended outriggers do not exceed 85% of the tipping loads and on tires do not exceed 75% of the tipping loads.

Courtesy of CraneMarket.com

Manual Offset Fly Attachment Lift Capacity Charts - 85% - Optional - Metric

15.9t Counterweight - Fully Extended Outriggers - 360° Rotation
(All Capacities Are Listed In Kilograms)

Radius (m)	Main Boom + 3m Manual Offset Fly (2°, 15°, 30°, 45° Offsets)															Radius (m)
	Boom Length (m)															
	12.88	16.8-17.18	21.3-21.72	25.9-26.53	30.5-31.61	35.1	39.49-39.6	44.2	47.23	48.8	51.8	53.3	54.94	56.4	59.5	
3	23 500	23 500														3
3.5	21 500	23 500	23 500													3.5
4	21 250	23 500	23 500													4
4.5	21 050	21 200	23 500	23 500												4.5
5	20 850	21 000	23 400	23 500												5
6	20 500	20 700	20 800	20 600	23 200											6
7	20 300	20 450	20 550	20 400	23 200											7
8	20 150	20 250	20 300	20 200	19 600	20 800	18 250									8
9	20 150	20 100	20 150	20 050	19 450	19 000	18 250	16 350								9
10	20 150	20 050	20 000	19 900	19 350	18 900	18 100	16 350	13 000	10 950		6 950				10
12	20 150	20 050	19 900	19 700	17 200	16 950	15 900	16 350	13 000	10 950	10 150	6 950	8 950	6 450	5 650	12
14		20 050	19 900	19 650	15 400	15 150	14 200	14 700	13 000	10 950	10 150	6 950	8 950	6 450	5 650	14
16		17 750	18 200	18 100	13 850	13 600	12 700	13 300	12 150	10 950	10 150	6 950	8 950	6 450	5 650	16
18			14 950	14 900	12 550	12 250	11 450	12 100	10 750	10 400	10 150	6 950	8 950	6 450	5 650	18
20			12 500	12 400	11 450	11 100	10 350	11 050	9 600	9 400	9 750	6 950	8 950	6 450	5 650	20
22				10 600	10 400	10 100	9 450	9 400	8 550	8 600	8 950	6 950	8 300	6 450	5 650	22
24				9 550	8 950	8 550	8 250	7 900	7 750	7 800	8 200	6 950	7 500	6 450	5 650	24
26				8 300	8 300	7 800	7 600	7 300	6 500	7 200	7 200	6 850	6 800	6 450	5 650	26
28					7 250	7 200	6 950	6 700	5 450	6 400	6 150	6 300	5 950	6 150	5 650	28
30					6 450	6 400	6 100	6 050	4 600	5 500	5 250	5 500	5 050	5 250	5 050	30
32						5 650	5 350	5 300	3 850	5 000	4 500	4 700	4 300	4 500	4 300	32
34						4 950	4 850	4 600	3 200	4 400	3 850	4 050	3 650	3 850	3 650	34
36							4 300	4 050	2 650	3 800	3 300	3 500	3 050	3 300	3 100	36
38							3 800	3 550	2 150	3 300	2 800	3 000	2 550	2 750	2 550	38
40							3 350	3 100	1 700	2 850	2 350	2 550	2 100	2 300	2 150	40
42								2 700	1 300	2 450	1 950	2 150	1 700	1 900	1 750	42
44								2 150	950	2 100	1 600	1 800	1 350	1 550	1 350	44
46										1 800	1 250	1 450	1 050	1 250	1 050	46
48										1 450	950	1 150	750	950	750	48
50												900		700		50
52												650				52

This information is not for crane operation. Operator must refer to the in- cab information for crane operation. Rated lifting capacities shown on fully extended outriggers do not exceed 85% of the tipping loads and on tires do not exceed 75% of the tipping loads.

Courtesy of CraneMarket.com

26.7t Counterweight - Fully Extended Outriggers - 360° Rotation
(All Capacities Are Listed In Kilograms)

Radius (m)	Main Boom + 3m Manual Offset Fly (2°, 15°, 30°, 45° Offsets)															Radius (m)
	Boom Length (m)															
	12.88	16.8-17.18	21.3-21.72	25.9-26.53	30.5-31.61	35.1	39.49-39.6	44.2	47.23	48.8	51.8	53.3	54.94	56.4	59.5	
3	23 500	23 500														3
3.5	21 500	23 500	23 500													3.5
4	21 250	23 500	23 500													4
4.5	21 050	21 200	23 500	23 500												4.5
5	20 850	21 000	23 400	23 500												5
6	20 500	20 700	20 800	20 600	23 200											6
7	20 300	20 450	20 550	20 400	23 200											7
8	20 150	20 250	20 300	20 200	19 600	20 800	18 250									8
9	20 150	20 100	20 150	20 050	19 450	19 000	18 250	16 350								9
10	20 150	20 050	20 000	19 900	19 350	18 900	18 100	16 350	13 000	10 950		6 950				10
12	20 150	20 050	19 900	19 700	17 200	16 950	15 900	16 350	13 000	10 950	10 150	6 950	8 950	6 450	5 650	12
14		20 050	19 900	19 650	15 400	15 150	14 200	14 700	13 000	10 950	10 150	6 950	8 950	6 450	5 650	14
16		19 850	19 900	19 650	13 850	13 600	12 700	13 300	12 150	10 950	10 150	6 950	8 950	6 450	5 650	16
18			19 900	18 800	12 550	12 250	11 450	12 100	10 750	10 400	10 150	6 950	8 950	6 450	5 650	18
20			16 850	16 750	11 450	11 100	10 350	11 050	9 600	9 400	9 750	6 950	8 950	6 450	5 650	20
22				14 400	10 500	10 100	9 450	10 000	8 550	8 600	8 950	6 950	8 300	6 450	5 650	22
24				12 500	9 700	9 250	8 600	9 100	7 750	7 800	8 200	6 950	7 500	6 450	5 650	24
26				10 900	8 950	8 500	7 850	8 300	6 950	7 200	7 600	6 850	6 800	6 450	5 650	26
28					8 350	7 850	7 300	7 650	6 250	6 650	7 000	6 300	6 150	6 200	5 650	28
30					7 800	7 300	6 700	7 000	5 600	6 100	6 450	5 750	5 550	5 650	5 300	30
32						6 750	6 200	6 350	5 050	5 650	5 950	5 300	5 000	5 100	4 800	32
34						6 300	5 700	5 750	4 550	5 200	5 500	4 900	4 550	4 650	4 300	34
36							5 300	5 050	4 050	4 800	5 050	4 500	4 100	4 200	3 900	36
38							4 900	4 550	3 650	4 450	4 650	4 150	3 700	3 800	3 500	38
40							4 600	4 250	3 250	4 100	4 300	3 850	3 300	3 450	3 150	40
42								3 950	2 900	3 800	3 800	3 550	2 950	3 100	2 800	42
44								2 250	2 550	3 550	3 350	3 300	2 650	2 800	2 500	44
46									2 250	3 150	2 950	3 050	2 350	2 500	2 200	46
48										2 750	2 550	2 750	2 100	2 250	1 950	48
50											2 200	2 400	1 850	2 000	1 700	50
52											1 100	2 100	1 600	1 800	1 450	52
54													1 400	1 550	1 250	54
56														1 350	1 050	56

This information is not for crane operation. Operator must refer to the in- cab information for crane operation. Rated lifting capacities shown on fully extended outriggers do not exceed 85% of the tipping loads and on tires do not exceed 75% of the tipping loads.

Courtesy of CraneMarket.com

15.9t Counterweight - Fully Extended Outriggers - 360° Rotation
(All Capacities Are Listed In Kilograms)

59.5m Main Boom Length									
Radius (m)	9.4m Manual Offset Fly				16.8m Manual Offset Fly				Radius (m)
	2°	15°	30°	45°	2°	15°	30°	45°	
16	4 900								16
18	4 900	4 900			3 750				18
20	4 900	4 900			3 750				20
22	4 900	4 900	4 950		3 750				22
24	4 900	4 900	4 950	5 050	3 750	3 800			24
26	4 900	4 900	4 950	5 050	3 750	3 700			26
28	4 900	4 900	4 950	5 050	3 750	3 650	3 350		28
30	4 900	4 900	4 950	5 050	3 750	3 600	3 300		30
32	4 400	4 750	4 900	5 050	3 750	3 550	3 250	3 050	32
34	3 750	4 050	4 350	4 550	3 750	3 500	3 200	3 050	34
36	3 200	3 450	3 700	3 900	3 550	3 450	3 200	3 050	36
38	2 700	2 950	3 150	3 350	3 000	3 400	3 150	3 000	38
40	2 250	2 450	2 650	2 800	2 550	2 950	3 150	3 000	40
42	1 850	2 050	2 250	2 350	2 150	2 500	2 850	3 000	42
44	1 500	1 650	1 850	1 950	1 800	2 100	2 450	2 700	44
46	1 150	1 300	1 450	1 550	1 450	1 750	2 050	2 250	46
48	850	1 000	1 150	1 200	1 150	1 450	1 700	1 900	48
50	600	750	850	900	900	1 150	1 400	1 550	50
52			550	600	600	850	1 100	1 200	52
54						600	800	900	54
56							550	650	56

This information is not for crane operation. Operator must refer to the in- cab information for crane operation. Rated lifting capacities shown on fully extended outriggers do not exceed 85% of the tipping loads and on tires do not exceed 75% of the tipping loads.

Courtesy of CraneMarket.com

26.7t Counterweight - Fully Extended Outriggers - 360° Rotation
(All Capacities Are Listed In Kilograms)

59.5m Main Boom Length

Radius (m)	9.4m Manual Offset Fly				16.8m Manual Offset Fly				Radius (m)
	2°	15°	30°	45°	2°	15°	30°	45°	
16	4 900								16
18	4 900	4 900			3 750				18
20	4 900	4 900			3 750				20
22	4 900	4 900	4 950		3 750				22
24	4 900	4 900	4 950	5 050	3 750	3 800			24
26	4 900	4 900	4 950	5 050	3 750	3 700			26
28	4 900	4 900	4 950	5 050	3 750	3 650	3 350		28
30	4 900	4 900	4 950	5 050	3 750	3 600	3 300		30
32	4 550	4 750	4 900	5 050	3 750	3 550	3 250	3 050	32
34	4 150	4 300	4 450	4 600	3 750	3 500	3 200	3 050	34
36	3 750	3 900	4 050	4 150	3 600	3 450	3 200	3 050	36
38	3 350	3 500	3 650	3 750	3 250	3 400	3 150	3 000	38
40	3 050	3 150	3 300	3 400	2 900	3 100	3 150	3 000	40
42	2 750	2 850	2 950	3 050	2 600	2 800	3 000	3 000	42
44	2 450	2 550	2 650	2 750	2 350	2 550	2 700	2 850	44
46	2 150	2 300	2 400	2 450	2 100	2 250	2 450	2 550	46
48	1 900	2 000	2 100	2 150	1 850	2 000	2 150	2 300	48
50	1 700	1 800	1 850	1 900	1 600	1 800	1 950	2 050	50
52	1 500	1 550	1 650	1 650	1 400	1 550	1 700	1 800	52
54	1 250	1 350	1 400	1 450	1 200	1 350	1 500	1 550	54
56	1 100	1 150	1 200		1 050	1 150	1 250	1 350	56
58	900	950	1 000		850	1 000	1 050	1 150	58
60	750	800	850		700	800	900	950	60
62	600	650			550	650	700	750	62
64						500	550		64

This information is not for crane operation. Operator must refer to the in- cab information for crane operation. Rated lifting capacities shown on fully extended outriggers do not exceed 85% of the tipping loads and on tires do not exceed 75% of the tipping loads.

Courtesy of CraneMarket.com

26.7t Counterweight - Fully Extended Outriggers - 360° Rotation
(All Capacities Are Listed In Kilograms)

59.5m Main Boom Length

Radius (m)	22.3m Manual Offset Fly				27.7m Manual Offset Fly				33.2m Manual Offset Fly				Radius (m)
	2°	15°	30°	45°	2°	15°	30°	45°	2°	15°	30°	45°	
20	3 050												20
22	3 050				2 350								22
24	3 050	3 100			2 350								24
26	3 050	3 100			2 350	2 350			1 400				26
28	3 050	3 100	3 000		2 350	2 350			1 400	1 400			28
30	3 050	3 100	3 000		2 350	2 350	2 400		1 400	1 400			30
32	3 050	3 100	3 000	2 900	2 350	2 350	2 400		1 400	1 400	1 400		32
34	3 050	3 100	3 000	2 800	2 350	2 350	2 350	2 150	1 400	1 400	1 400		34
36	2 900	3 100	3 000	2 700	2 350	2 350	2 250	2 050	1 400	1 400	1 350		36
38	2 550	2 750	2 950	2 650	2 200	2 350	2 100	1 950	1 400	1 400	1 250	1 150	38
40	2 200	2 400	2 650	2 550	1 900	2 100	2 050	1 850	1 300	1 300	1 150	1 050	40
42	1 900	2 100	2 300	2 500	1 600	1 800	1 950	1 800	1 050	1 200	1 050	950	42
44	1 650	1 800	2 000	2 200	1 350	1 550	1 750	1 700		950	950	850	44
46	1 400	1 550	1 750	1 900	1 100	1 300	1 500	1 650		700	900	800	46
48	1 150	1 300	1 500	1 650	900	1 050	1 250	1 400		500	700	750	48
50	950	1 100	1 250	1 400	650	850	1 000	1 150				600	50
52	700	850	1 050	1 150		600	800	950					52
54	550	650	800	950			600	700					54
56			600	700				500					56
58				500									58

This information is not for crane operation. Operator must refer to the in- cab information for crane operation. Rated lifting capacities shown on fully extended outriggers do not exceed 85% of the tipping loads and on tires do not exceed 75% of the tipping loads.

Courtesy of CraneMarket.com

Hydraulic Offset Fly Attachment Lift Capacity Charts - 85% Optional - Metric

15.9t Counterweight - Fully Extended Outriggers - 360° Rotation
(All Capacities Are Listed In Kilograms)

Main Boom + 3m Hydraulic Offset Fly (2° - 45° Offsets)

Radius (m)	Main Boom Length (m)															Radius (m)
	12.88	16.8-17.18	21.3-21.72	25.9-26.53	30.5-31.61	35.1	39.49-39.6	44.2	47.23	48.8	51.8	53.3	54.94	56.4	59.5	
3	23 500	23 500														3
3.5	21 450	23 500	23 500													3.5
4	21 200	23 500	23 500													4
4.5	20 950	21 150	23 500	23 500												4.5
5	20 750	20 950	23 300	23 500												5
6	20 450	20 600	20 700	20 550	23 100											6
7	20 200	20 350	20 450	20 300	23 100											7
8	20 100	20 150	20 250	20 150	19 500	20 700	18 150									8
9	20 100	20 050	20 100	20 000	19 400	18 900	18 150	16 250								9
10	20 100	20 000	19 950	19 850	19 300	18 850	17 950	16 250	12 950	10 900		6 900				10
12	20 100	20 000	19 850	19 650	17 000	16 800	15 700	16 200	12 950	10 900	10 100	6 900	8 900	6 400	5 600	12
14		20 000	19 850	19 600	15 250	15 000	14 000	14 550	12 950	10 900	10 100	6 900	8 900	6 400	5 600	14
16		17 600	18 000	17 950	13 700	13 400	12 550	13 150	11 950	10 900	10 100	6 900	8 900	6 400	5 600	16
18			14 750	14 700	12 400	12 050	11 250	11 900	10 600	10 200	10 100	6 900	8 900	6 400	5 600	18
20			12 300	12 250	11 250	10 900	10 200	10 850	9 400	9 250	9 600	6 900	8 900	6 400	5 600	20
22				10 400	10 200	9 950	9 250	9 200	8 350	8 400	8 750	6 900	8 100	6 400	5 600	22
24				9 400	8 750	8 400	8 100	7 750	7 550	7 700	8 000	6 900	7 350	6 400	5 600	24
26				8 150	8 100	7 600	7 400	7 100	6 300	7 050	7 000	6 650	6 600	6 400	5 600	26
28					7 100	7 000	6 800	6 500	5 300	6 200	6 000	6 100	5 750	5 950	5 600	28
30					6 300	6 250	5 900	5 850	4 400	5 350	5 100	5 300	4 850	5 100	4 900	30
32						5 450	5 150	5 100	3 650	4 850	4 350	4 550	4 100	4 350	4 150	32
34						4 800	4 700	4 450	3 000	4 200	3 700	3 900	3 450	3 700	3 500	34
36							4 100	3 850	2 450	3 650	3 100	3 300	2 900	3 100	2 900	36
38							3 600	3 350	1 950	3 150	2 600	2 800	2 400	2 600	2 400	38
40							3 200	2 900	1 500	2 700	2 150	2 350	1 950	2 150	1 950	40
42								2 500	1 150	2 300	1 750	1 950	1 550	1 750	1 550	42
44								2 000	750	1 950	1 400	1 600	1 200	1 400	1 200	44
46										1 600	1 100	1 300	850	1 050	850	46
48										1 300	800	1 000	600	750	600	48
50												700				50

This information is not for crane operation. Operator must refer to the in- cab information for crane operation. Rated lifting capacities shown on fully extended outriggers do not exceed 85% of the tipping loads and on tires do not exceed 75% of the tipping loads.

Courtesy of CraneMarket.com

26.7t Counterweight - Fully Extended Outriggers - 360° Rotation
(All Capacities Are Listed In Kilograms)

Main Boom + 3m Hydraulic Offset Fly (2° - 45° Offsets)

Radius (m)	Main Boom Length (m)															Radius (m)
	12.88	16.8-17.18	21.3-21.72	25.9-26.53	30.5-31.61	35.1	39.49-39.6	44.2	47.23	48.8	51.8	53.3	54.94	56.4	59.5	
3	23 500	23 500														3
3.5	21 450	23 500	23 500													3.5
4	21 200	23 500	23 500													4
4.5	20 950	21 150	23 500	23 500												4.5
5	20 750	20 950	23 300	23 500												5
6	20 450	20 600	20 700	20 550	23 100											6
7	20 200	20 350	20 450	20 300	23 100											7
8	20 100	20 150	20 250	20 150	19 500	20 700	18 150									8
9	20 100	20 050	20 100	20 000	19 400	18 900	18 150	16 250								9
10	20 100	20 000	19 950	19 850	19 300	18 850	17 950	16 250	12 950	10 900		6 900				10
12	20 100	20 000	19 850	19 650	17 000	16 800	15 700	16 200	12 950	10 900	10 100	6 900	8 900	6 400	5 600	12
14		20 000	19 850	19 600	15 250	15 000	14 000	14 550	12 950	10 900	10 100	6 900	8 900	6 400	5 600	14
16		19 650	19 850	19 600	13 700	13 400	12 550	13 150	11 950	10 900	10 100	6 900	8 900	6 400	5 600	16
18			19 750	18 600	12 400	12 050	11 250	11 900	10 600	10 200	10 100	6 900	8 900	6 400	5 600	18
20			16 650	16 600	11 250	10 900	10 200	10 850	9 400	9 250	9 600	6 900	8 900	6 400	5 600	20
22				14 250	10 300	9 950	9 250	9 800	8 350	8 400	8 750	6 900	8 100	6 400	5 600	22
24				12 300	9 500	9 050	8 400	8 900	7 550	7 700	8 000	6 900	7 350	6 400	5 600	24
26				10 750	8 750	8 300	7 750	8 100	6 750	7 050	7 400	6 650	6 600	6 400	5 600	26
28					8 150	7 700	7 100	7 450	6 050	6 450	6 800	6 100	5 950	6 000	5 600	28
30					7 650	7 100	6 500	6 800	5 400	5 900	6 300	5 600	5 350	5 450	5 100	30
32						6 600	6 000	6 150	4 850	5 450	5 800	5 100	4 800	4 900	4 600	32
34						6 100	5 500	5 600	4 350	5 000	5 300	4 700	4 350	4 450	4 100	34
36							5 100	4 850	3 850	4 600	4 850	4 300	3 900	4 000	3 700	36
38							4 700	4 350	3 450	4 250	4 500	4 000	3 500	3 600	3 300	38
40							4 400	4 050	3 050	3 900	4 100	3 650	3 100	3 250	2 950	40
42								3 800	2 700	3 650	3 600	3 350	2 800	2 900	2 600	42
44								2 050	2 400	3 350	3 150	3 100	2 450	2 600	2 300	44
46									2 050	3 000	2 750	2 850	2 150	2 300	2 000	46
48										2 600	2 400	2 600	1 900	2 050	1 750	48
50											2 050	2 250	1 650	1 800	1 500	50
52											900	1 900	1 400	1 600	1 250	52
54													1 200	1 350	1 050	54
56														1 150	850	56

This information is not for crane operation. Operator must refer to the in- cab information for crane operation. Rated lifting capacities shown on fully extended outriggers do not exceed 85% of the tipping loads and on tires do not exceed 75% of the tipping loads.

Courtesy of CraneMarket.com

15.9t Counterweight - Fully Extended Outriggers - 360° Rotation
(All Capacities Are Listed In Kilograms)

59.5m Main Boom Length							
Radius (m)	9.4m Hydraulic Offset Fly			16.8m Hydraulic Offset Fly			Radius (m)
	2° - 15°	15° - 30°	30° - 45°	2° - 15°	15° - 30°	30° - 45°	
16	4 800						16
18	4 800	4 800		3 650			18
20	4 800	4 800		3 650			20
22	4 800	4 800	4 850	3 650			22
24	4 800	4 800	4 850	3 650	3 650		24
26	4 800	4 800	4 850	3 600	3 600		26
28	4 800	4 800	4 850	3 550	3 250	3 250	28
30	4 650	4 800	4 850	3 500	3 200	3 200	30
32	4 150	4 350	4 500	3 450	3 150	2 900	32
34	3 650	3 900	4 050	3 400	3 100	2 900	34
36	3 050	3 300	3 600	3 200	3 100	2 850	36
38	2 550	2 800	3 050	2 850	3 050	2 850	38
40	2 100	2 300	2 550	2 400	2 700	2 800	40
42	1 700	1 900	2 100	2 000	2 400	2 600	42
44	1 350	1 500	1 700	1 650	2 000	2 300	44
46	1 000	1 200	1 350	1 300	1 650	1 950	46
48	700	850	1 000	1 000	1 300	1 600	48
50		600	700	750	1 000	1 250	50
52					750	950	52
54						700	54

This information is not for crane operation. Operator must refer to the in- cab information for crane operation. Rated lifting capacities shown on fully extended outriggers do not exceed 85% of the tipping loads and on tires do not exceed 75% of the tipping loads.

Courtesy of CraneMarket.com

26.7t Counterweight - Fully Extended Outriggers - 360° Rotation
(All Capacities Are Listed In Kilograms)

59.5m Main Boom Length

Radius (m)	9.4m Hydraulic Offset Fly			16.8m Hydraulic Offset Fly			Radius (m)
	2° - 15°	15° - 30°	30° - 45°	2° - 15°	15° - 30°	30° - 45°	
16	4 800						16
18	4 800	4 800		3 650			18
20	4 800	4 800		3 650			20
22	4 800	4 800	4 850	3 650			22
24	4 800	4 800	4 850	3 650	3 650		24
26	4 800	4 800	4 850	3 600	3 600		26
28	4 800	4 800	4 850	3 550	3 250	3 250	28
30	4 650	4 800	4 850	3 500	3 200	3 200	30
32	4 150	4 350	4 500	3 450	3 150	2 900	32
34	3 700	3 900	4 050	3 400	3 100	2 900	34
36	3 300	3 500	3 650	3 200	3 100	2 850	36
38	2 950	3 100	3 250	2 850	3 050	2 850	38
40	2 600	2 750	2 900	2 500	2 700	2 800	40
42	2 300	2 450	2 550	2 200	2 400	2 600	42
44	2 000	2 150	2 250	1 950	2 100	2 300	44
46	1 750	1 850	1 950	1 650	1 850	2 050	46
48	1 500	1 600	1 700	1 450	1 600	1 750	48
50	1 250	1 350	1 450	1 200	1 350	1 500	50
52	1 050	1 150	1 200	1 000	1 150	1 300	52
54	850	900	1 000	800	900	1 050	54
56	650	700	750	600	700	850	56
58		550	550		500	650	58

26.7t Counterweight - Fully Extended Outriggers - 360° Rotation
(All Capacities Are Listed In Kilograms)

59.5m Main Boom Length

Radius (m)	22.3m Hydraulic Offset Fly			27.7m Hydraulic Offset Fly			33.2m Hydraulic Offset Fly			Radius (m)
	2° - 15°	15° - 30°	30° - 45°	2° - 15°	15° - 30°	30° - 45°	2° - 15°	15° - 30°	30° - 45°	
20	2 950									20
22	2 950			2 250						22
24	2 950	3 000		2 250	2 250		1 350			24
26	2 950	3 000		2 250	2 250		1 350			26
28	2 950	3 000	3 000	2 250	2 250		1 350	1 350		28
30	2 950	3 000	3 000	2 250	2 150	2 150	1 350	1 350		30
32	2 950	2 950	2 550	2 250	2 100	2 100	1 350	1 350	1 350	32
34	2 850	2 800	2 450	2 250	1 950	1 750	1 350	1 250	1 250	34
36	2 450	2 650	2 350	2 050	1 850	1 650	1 350	1 150	900	36
38	2 100	2 300	2 300	1 750	1 750	1 550	1 200	1 050	900	38
40	1 750	1 950	2 200	1 450	1 650	1 450	1 100	950	800	40
42	1 450	1 650	1 900	1 150	1 350	1 400	800	850	700	42
44	1 200	1 350	1 600	850	1 050	1 300		750	650	44
46	900	1 100	1 300	600	800	1 050		500	550	46
48	700	850	1 050		550	750				48
50		600	800			500				50
52			550							52

This information is not for crane operation. Operator must refer to the in- cab information for crane operation. Rated lifting capacities shown on fully extended outriggers do not exceed 85% of the tipping loads and on tires do not exceed 75% of the tipping loads.

Courtesy of CraneMarket.com

On Tires Capacity Charts - 85%

14.3t Counterweight - On Tires - Stationary - Boom Centered Over Rear Between Tire Tracks
(All Capacities Are Listed In Kilograms)

Radius (m)	Main Boom Length (m)							Radius (m)
	12.88	16.8	21.3	25.9	30.5	35.1	39.6	
3	41,700							3
3.5	33,900							3.5
4	30,650							4
4.5	27,900	22,650						4.5
5	25,550	22,650						5
6	21,700	22,650	16,300					6
7	18,650	20,250	16,300					7
8	16,150	17,800	16,300	13,350				8
9	13,850	15,750	16,300	13,350	11,000			9
10	11,200	13,100	14,350	13,350	11,000	8,350		10
12		9,400	10,600	11,050	11,000	8,350	6,400	12
14		6,900	8,050	8,500	8,800	8,350	6,400	14
16			6,250	6,700	7,000	7,000	6,400	16
18			4,900	5,350	5,650	5,650	5,650	18
20				4,300	4,550	4,600	4,550	20
22				3,450	3,700	3,700	3,700	22
24					3,000	3,000	3,000	24
26					2,450	2,450	2,450	26
28						1,950	1,950	28
30						1,550	1,500	30
32						1,200	1,150	32
34							850	34

14.3t Counterweight - On Tires - Pick & Carry (Creep) - Boom Centered Over Rear Between Tire Tracks
(All Capacities Are Listed In Kilograms)

Radius (m)	Main Boom Length (m)							Radius (m)
	12.88	16.8	21.3	25.9	30.5	35.1	39.6	
3	39,650							3
3.5	32,750							3.5
4	27,500							4
4.5	27,500	22,650						4.5
5	27,150	22,650						5
6	22,900	22,650	13,650					6
7	17,500	19,500	13,650					7
8	13,700	15,600	13,650	11,000				8
9	10,900	12,750	13,650	11,000	9,100			9
10	8,750	10,550	11,750	11,000	9,100	7,450		10
12		7,500	8,600	9,050	9,100	7,450	6,200	12
14		5,350	6,500	6,950	7,250	7,250	6,200	14
16			4,950	5,400	5,700	5,700	5,650	16
18			3,800	4,200	4,500	4,500	4,500	18
20				3,300	3,550	3,600	3,550	20
22				2,550	2,850	2,850	2,800	22
24					2,200	2,200	2,200	24
26					1,700	1,700	1,700	26
28						1,300	1,300	28
30						900	900	30

This information is not for crane operation. Operator must refer to the in- cab information for crane operation. Rated lifting capacities shown on fully extended outriggers do not exceed 85% of the tipping loads and on tires do not exceed 75% of the tipping loads.

Courtesy of CraneMarket.com

This Page Intentionally Blank

Courtesy of CraneMarket.com

Link- Belt Cranes Lexington, Kentucky www.linkbelt.com

®Link- Belt is a registered trademark. Copyright 2025. We are constantly improving our products and therefore reserve the right to change designs and specifications.

Courtesy of CraneMarket.com