Hitachi Sumitomo Heavy Industries Construction Crane Co., Ltd.
12-14, Ueno 7-chome, Taito-ku, Tokyo 110-0005, Japan
Phone: 81-3-3845-1387 Facsimile: 81-3-3845-1394

- We are constantly improving our products and therefore reserve the right to change designs and specifications without notice.
- Units in this specification are shown under International System of Units; the figures in parenthesis are under Gravitational System of Units as old one.

Address Inquires to:

Printed in Japan
0410(A)05H.EA045
(supersedes 0406(A)05H.EA030-1)

HITACHI SUMITOMO

SCX6500

LARGE HYDRAULIC CRAWLER CRANE

Specifications

– 2nd Edition

HSC

Courtesy of Crane.Market

Front-end Attachment Versions

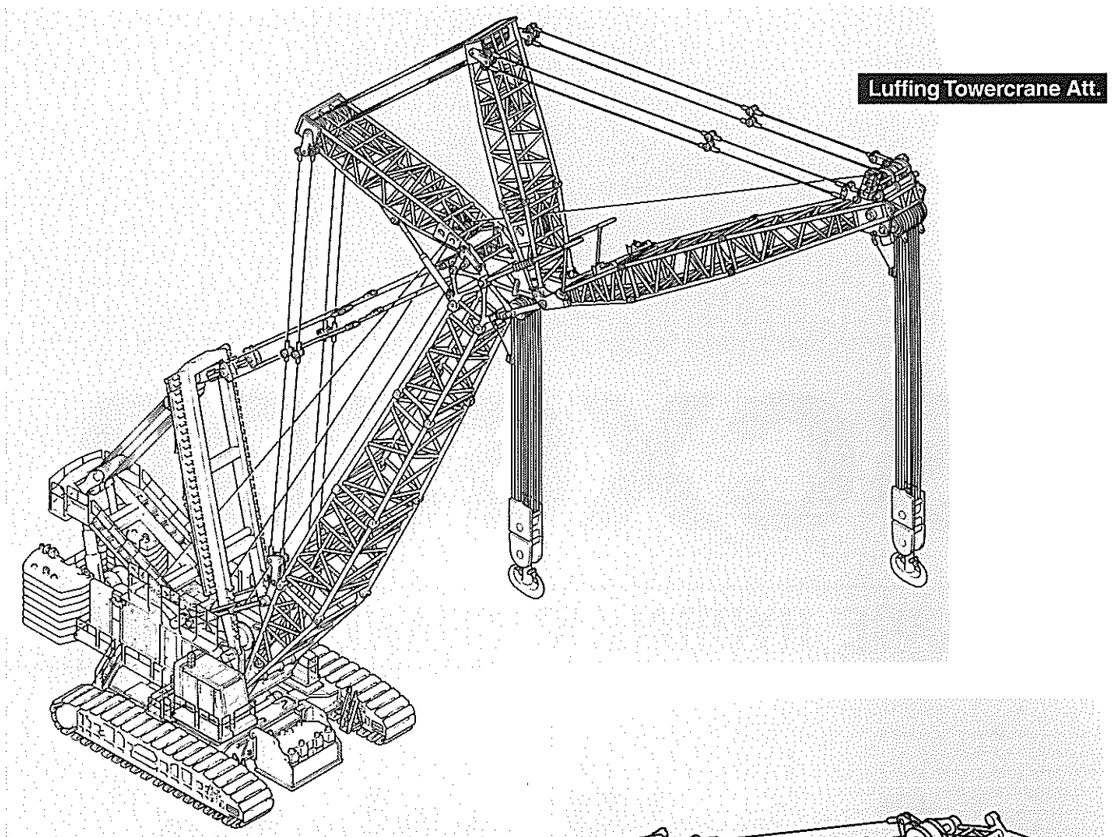

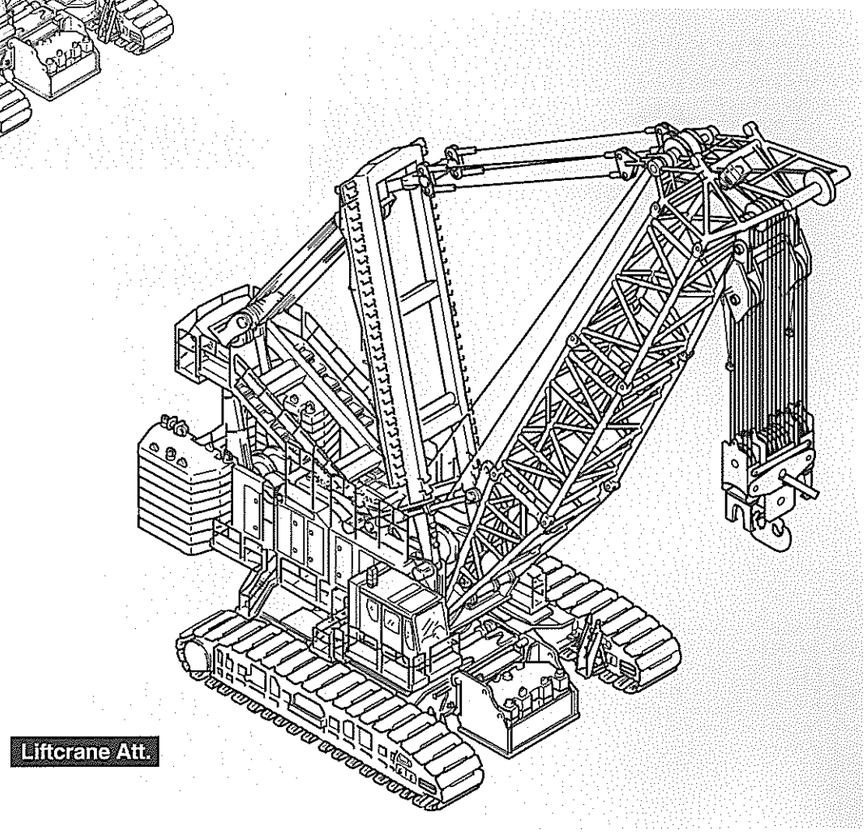

Liftcrane Capacities

■w/H650 Heavy duty top section & S-Ⅱ ctwt arrangement

Working radius (m)	Boom length (m)										
	18.29	24.38	30.48	36.58	42.67	48.77	54.86	60.96	67.06	73.15	79.25
6.0	650.0	630.0/6.7									
7.0	620.0	620.0	594.0/7.3								
8.0	534.0	534.0	533.0	532.0	470.0/8.8						
9.0	468.0	468.0	467.0	465.0	462.0	430.0/9.4					
10.0	416.0	416.0	415.0	414.0	413.0	410.0	350.0/10.1	296.8/10.8	265.8/11.5		
12.0	340.0	340.0	339.0	337.0	336.0	335.0	330.0	296.8	262.8	225.8/12.2	185.8/12.9
14.0	286.0	285.5	284.6	283.9	279.5	274.1	266.6	262.7	251.0	220.3	184.3
16.0	240.0	239.0	238.5	238.6	235.0	230.3	223.2	219.6	217.1	214.2	181.6
18.0	200.8	200.8	200.8	200.8	200.7	197.6	190.9	187.5	185.2	182.3	178.9
20.0	162.0/18.9	172.7	172.7	172.7	172.5	172.0	165.8	162.6	160.4	157.7	155.9
22.0		151.0	151.0	150.9	150.7	150.1	145.7	142.7	140.6	138.0	136.2
24.0		133.6	133.6	133.5	133.3	132.6	128.9	126.5	124.4	121.9	120.2
26.0		130.0/24.2	119.4	119.3	119.1	118.4	114.6	113.0	111.0	108.5	106.8
28.0			107.5	107.5	107.2	106.6	102.7	101.5	99.6	97.2	95.6
30.0			100.2/29.4	97.5	97.2	96.6	92.7	91.7	89.9	87.5	85.9
32.0				88.9	88.7	88.0	84.1	83.1	81.4	79.1	77.5
34.0				81.4	81.2	80.6	76.7	75.6	74.0	71.8	70.2
36.0				79.0/34.7	74.7	74.1	70.2	69.0	67.4	65.3	63.7
38.0					68.9	68.3	64.4	63.1	61.6	59.5	58.0
40.0					63.7	63.2	59.3	57.7	56.3	54.3	52.8
42.0						58.6	54.7	52.9	51.6	49.6	48.2
44.0						54.2	50.1	48.5	47.3	45.3	43.9
46.0						51.2/45.3	46.0	44.5	43.3	41.5	40.1
48.0							42.1	40.8	39.7	37.9	36.6
50.0							38.4	37.3	36.4	34.6	33.3
52.0							37.3/50.5	34.1	33.3	31.6	30.3
54.0								31.1	30.4	28.8	27.6
56.0								28.5/55.8	27.6	26.1	25.0
58.0									25.1	23.6	22.5
60.0									22.6	21.3	20.3
62.0									21.3/61.1	19.1	18.1
64.0										17.0	16.1
66.0										15.0	14.2
68.0										14.6/66.4	12.4
70.0											10.6
72.0											9.2/71.6

(EC404039-A)

■w/L300 light duty top section & S-Ⅱ ctwt arrangement

Working radius (m)	Boom length (m)											
	18.29	24.38	30.48	36.58	42.67	48.77	54.86	60.96	67.06	73.15	79.25	85.34
6.0	325.0	325.0/6.7										
7.0	325.0	325.0	325.0/7.3									
8.0	325.0	325.0	325.0	325.0	325.0/8.8							
9.0	325.0	325.0	325.0	325.0	325.0	325.0/9.4						
10.0	325.0	325.0	325.0	325.0	325.0	325.0	325.0/10.1	300.0/10.8	269.0/11.5			
12.0	325.0	325.0	325.0	325.0	325.0	325.0	325.0	300.0	266.0	229.0/12.2	189.0/12.9	159.0/13.6
14.0	286.0	285.5	284.6	283.9	279.5	274.1	269.8	265.9	254.2	223.5	187.5	158.5
16.0	240.0	239.0	238.5	238.6	235.0	230.3	226.4	222.8	220.3	217.4	184.8	155.8
18.0	200.8	200.8	200.8	200.8	200.7	197.6	194.1	190.7	188.4	185.5	182.1	153.2
20.0	162.0/18.9	172.7	172.7	172.7	172.5	172.0	169.0	165.8	163.6	160.9	159.1	141.9
22.0		151.0	151.0	150.9	150.7	150.1	148.9	145.9	143.8	141.2	139.4	132.0
24.0		133.6	133.6	133.5	133.3	132.6	132.1	129.7	127.6	125.1	123.4	121.0
26.0		130.0/24.2	119.4	119.3	119.1	118.4	117.8	116.2	114.2	111.7	110.0	107.7
28.0			107.5	107.5	107.2	106.6	105.9	104.7	102.8	100.4	98.8	96.4
30.0			100.2/29.4	97.5	97.2	96.6	95.9	94.9	93.1	90.7	89.1	86.8
32.0				88.9	88.7	88.0	87.3	86.3	84.6	82.3	80.7	78.5
34.0				81.4	81.2	80.6	79.9	78.8	77.2	75.0	73.4	71.2
36.0				79.0/34.7	74.7	74.1	73.4	72.2	70.6	68.5	66.9	64.8
38.0					68.9	68.3	67.6	66.3	64.8	62.7	61.2	59.0
40.0					63.7	63.2	62.5	60.9	59.5	57.5	56.0	53.9
42.0						58.6	57.9	56.1	54.8	52.8	51.4	49.3
44.0						54.2	53.3	51.7	50.5	48.5	47.1	45.1
46.0						51.3/45.3	49.2	47.7	46.5	44.7	43.3	41.3
48.0							45.3	44.0	42.9	41.1	39.8	37.8
50.0							41.6	40.5	39.6	37.8	36.5	34.6
52.0							40.5/50.6	37.3	36.5	34.8	33.5	31.6
54.0								34.3	33.6	32.0	30.8	28.9
56.0								31.7/55.8	30.8	29.3	28.2	26.3
58.0									28.3	26.8	25.7	24.0
60.0									25.8	24.5	23.5	21.7
62.0									24.5/61.1	22.3	21.3	19.6
64.0										20.2	19.3	17.7
66.0										18.2	17.4	15.8
68.0										17.8/66.4	15.6	14.0
70.0											13.8	12.4
72.0											12.7/71.7	10.8
74.0												9.2
76.0												7.7
78.0												7.1/76.9
80.0												

(ECT00080E-3B)

Courtesy of Crane.Market

w/L170 light duty top section & S-Ⅱ ctwt arrangement

Working radius(m)	Boom length(m)												
	36.58	42.67	48.77	54.86	60.96	67.06	73.15	79.25	85.34	91.44	97.54	103.63	109.73
7.0	170.0	170.0/7.7											
8.0	170.0	170.0	170.0/8.4										
9.0	170.0	170.0	170.0	170.0/9.1	170.0/9.8								
10.0	170.0	170.0	170.0	170.0	170.0	170.0/10.5	170.0/11.2	170.0/11.9					
12.0	170.0	170.0	170.0	170.0	170.0	170.0	170.0	170.0	159.3/12.5	136.2/13.2	116.0/13.9		
14.0	170.0	170.0	170.0	170.0	170.0	170.0	170.0	170.0	157.0	134.5	116.0	96.0/14.6	78.0/15.3
16.0	170.0	170.0	170.0	170.0	170.0	170.0	170.0	170.0	153.9	130.5	116.0	96.0	76.5
18.0	170.0	170.0	170.0	170.0	170.0	170.0	170.0	170.0	150.9	126.4	106.7	88.0	72.5
20.0	170.0	170.0	170.0	170.0	169.4	166.9	164.3	162.4	142.6	117.1	98.5	80.9	66.3
22.0	151.8	151.5	151.1	150.7	149.5	147.1	144.7	142.9	133.0	108.8	91.3	74.7	60.9
24.0	134.6	134.3	133.8	133.4	132.7	131.0	128.7	127.0	124.3	101.5	84.8	69.1	56.1
26.0	120.5	120.2	119.8	119.3	118.6	117.6	115.3	113.7	111.7	94.9	79.1	64.1	51.8
28.0	108.8	108.5	108.0	107.5	106.8	106.2	104.1	102.5	100.6	89.0	73.8	59.6	47.9
30.0	99.0	98.7	98.1	97.6	96.9	96.3	94.4	92.9	91.0	83.7	69.1	55.5	44.3
32.0	90.5	90.2	89.7	89.1	88.4	87.7	86.1	84.6	82.8	78.8	64.8	51.8	41.1
34.0	83.1	82.8	82.3	81.8	81.0	80.4	78.7	77.4	75.5	74.3	60.9	48.4	38.1
36.0	82.4/34.2	76.4	75.9	75.4	74.6	73.9	72.3	70.9	69.2	68.0	57.3	45.3	35.4
38.0		70.7	70.2	69.7	68.9	68.2	66.5	65.2	63.5	62.3	54.0	42.4	32.9
40.0		66.8/39.5	65.2	64.6	63.9	63.1	61.4	60.1	58.4	57.3	50.9	39.7	30.6
42.0			60.6	60.1	59.3	58.4	56.7	65.5	53.8	52.7	48.0	37.3	28.4
44.0			56.5	56.0	55.3	54.1	52.5	51.3	49.7	48.6	45.4	35.0	26.4
46.0			55.0/44.8	52.3	51.5	50.2	48.6	47.5	45.9	44.8	42.9	32.8	24.5
48.0				48.8	47.8	46.6	45.1	44.0	42.4	41.4	39.9	30.8	22.8
50.0				45.2	44.3	43.3	41.8	40.8	39.3	38.2	36.7	28.9	21.1
52.0					41.1	40.2	38.8	37.8	36.3	35.3	33.8	27.2	19.6
54.0					38.1	37.3	36.0	35.1	33.6	32.6	31.2	25.5	18.1
56.0					36.2/55.3	34.6	33.4	32.5	31.1	30.1	28.7	23.9	16.8
58.0						32.1	30.9	30.1	28.7	27.8	26.4	22.4	15.5
60.0						29.6	28.6	27.9	26.5	25.6	24.2	21.0	14.3
62.0						28.9/60.6	26.5	25.8	24.5	23.6	22.2	19.7	13.1
64.0							24.4	23.8	22.5	21.7	20.3	18.4	12.0
66.0							22.5/65.9	21.9	20.7	19.9	18.5	17.2	10.9
68.0								20.1	18.9	18.2	16.8	16.1	9.9
70.0								18.4	17.3	16.5	15.2	14.6	9.0
72.0								17.4/71.2	15.7	15.0	13.7	13.1	8.1
74.0									14.2	13.5	12.3	11.7	7.2
76.0									12.7	12.1	10.9	10.4	6.4
78.0									12.4/76.4	10.8	9.6	9.1	
80.0										9.5	8.4	7.9	
82.0										8.4/81.7	7.2	6.7	
84.0											6.0		

(ECT00084E-B)

Notes — Liftcrane capacities

1. Capacities included in this chart are the maximum allowable, and are based on machine standing level on firm supporting surface under ideal job conditions.
2. Capacities are in metric tons, and are not more than 78% of minimum tipping loads, or based on other factor of machine structural strength limitation.
3. Capacities are based on freely suspended loads and make no allowance for such factors as the effect of wind, sudden stopping of loads, supporting surface conditions, and operating speeds. Operator must reduce load ratings to take such conditions into account. Deduction from rated capacities must be made for mass of hook block, weighted ball/hook, sling, spreader bar, or other suspended gear.
   Hook block mass is as follows:
   325t·····9.8ton 170t·····6.5ton 15t·····1.3ton
   Blancer block w/10-sheave ·····4.1ton.
   *The H650 heavy duty top section consists of (1) L300 light duty top section, and (2) a ten-hanger sheave block.
4. All capacities are rated for 360° swing.
5. Least stable rated condition is over the side.
6. S-Ⅱ counterweight arrangement of 172ton upper counterweight plus 78ton carbody weight is required for all capacities on these charts; S-Ⅰ counterweight arrangement with an 130ton upper counterweight is also available, and capacities under its arrangement for each liftcrane application are detailed. If required, please consult us or nearest distributor.
7. Attachment must be erected and lowered over the ends of the crawler mounting.
8. When handling load off main boom head sheaves in case of mounting auxiliary short jib on top of boom, the deduction of 1,000kg from the capacities shown in these charts must be made.

SCX6500 AUXILIARY SHORT JIB CAPACITIES: Max. 15t

Note: Aux. short jib capacities are detailed for each liftcrane application; if required, please consult us or nearest distributor.

Luffing Towercrane Capacities

w/32.00m Tower

Tower length(m)	32.00														
Jib length(m)	24.38			30.48			36.58			42.67			48.77		
Working radius(m) / Tower angle	88°	75°	65°	88°	75°	65°	88°	75°	65°	88°	75°	65°	88°	75°	65°
12.0	170.0/13.5														
14.0	170.0			170.0/15.3											
16.0	170.0			170.0			170.0/17.1								
18.0	170.0			170.0			170.0			169.0/18.9					
20.0	170.0			170.0			170.0			166.1			143.4/20.7		
22.0	151.3			150.9			150.5			149.9			141.1		
24.0	135.0	113.8/25.6		134.7			134.3			133.6			133.1		
26.0	116.5	111.7		121.4			121.0			120.4			119.9		
28.0	97.1	101.5		110.3	97.6/28.7		110.0			109.3			108.8		
30.0	87.6/28.9	92.9		98.5	92.2		100.7	85.1/31.7		100.0			99.5		
32.0		85.6		85.7	84.8		92.7	84.2		92.0			91.6		
34.0		79.1	73.4/34.1	73.3	78.5		84.1	77.9		85.1	74.8/34.8		84.7		
36.0		73.4	68.5	69.0/34.7	72.9		74.9	72.4		79.1	71.5		78.6	66.4/37.8	
38.0			63.9		68.0	62.9/38.1	66.3	67.5		72.1	66.6		73.3	66.0	
40.0			59.8		63.6	59.0	57.7	63.2		65.2	62.3		68.6	61.7	
42.0			57.6/41.1		60.1/41.7	55.3	55.9/40.4	59.3	54.7	58.7	58.5		62.7	57.8	
44.0						52.0		55.6	51.5	52.5	55.0	47.7/45.9	57.2	54.4	
46.0						49.0		52.6	48.5	46.0	51.8	47.5	52.1	51.2	
48.0						47.8/46.8		50.4/47.5	45.8	45.6/46.1	48.9	44.9	47.3	48.4	42.0/49.8
50.0									43.3		46.3	42.5	42.4	45.8	41.8
52.0									41.0		43.9	40.2	37.9/51.8	43.4	39.6
54.0									40.4/52.6		42.5/53.2	38.1		41.1	37.5
56.0												38.2		39.1	35.6
58.0												34.4		37.2	33.9
60.0												34.2/58.3		36.3/58.9	32.2
62.0															30.7
64.0															29.2

(ECT00124E-B)

Tower length(m)	32.00												
Jib length(m)	54.86			60.96			67.06			73.15		79.25	
Working radius(m) / Tower angle	88°	75°	65°	88°	75°	65°	88°	75°	65°	88°	75°	88°	75°
22.0	121.7/22.5												
24.0	118.7			106.7/24.2									
26.0	114.6			104.9			84.4			62.2/27.8			
28.0	108.1			100.6			79.6			61.9		46.3/29.6	
30.0	98.8			95.4			75.2			58.3		45.7	
32.0	90.8			90.2			71.2			55.1		43.0	
34.0	83.9			83.3			67.7			52.2		40.5	
36.0	77.9			77.3			64.4			49.5		38.2	
38.0	72.6			72.0			61.5			47.1		36.1	
40.0	67.8	59.0/40.9		67.3			58.7			44.8		34.2	
42.0	63.6	56.9		63.0			56.2			42.8		32.5	
44.0	59.2	53.4		59.2	52.7		54.0			40.9		30.8	
46.0	54.4	50.3		55.7	49.6		51.8	47.2/47.0		39.1		29.3	
48.0	50.0	47.5		51.5	46.7		49.9	45.8		37.5		27.9	
50.0	45.8	44.9		47.5	44.2		48.1	43.2		35.0	42.0	26.5	
52.0	41.9	42.5	36.8/53.7	43.9	41.8		44.6	40.9		34.6	40.2	25.5	29.4/53.1
54.0	38.1	40.3	36.5	40.4	39.6		41.3	38.7		33.3	38.0	24.3	28.8
56.0	34.3	38.3	34.7	37.1	37.6	32.5/57.7	38.2	36.7		32.1	36.0	23.3	27.4
58.0	31.1/57.6	36.4	32.9	34.0	35.7	32.2	35.4	34.8		31.0	34.2	22.3	26.1
60.0		34.6	31.3	30.9	34.0	30.6	32.6	33.1	28.4/61.6	30.0	32.4	21.4	24.9
62.0		33.0	29.8	27.8	32.4	29.1	29.9	31.5	28.1	29.0	30.8	20.6	23.9
64.0		31.4	28.4	25.7/63.3	30.8	27.7	27.3	30.0	26.7	28.1	29.3	19.8	22.8
66.0		30.9/64.7	27.0		29.4	26.4	24.6	28.6	25.4	26.4	27.9	19.0	21.9
68.0			25.6		28.1	25.1	22.2	27.2	24.2	24.2	26.6	18.3	21.0
70.0			24.7/69.6		26.8	24.0	20.8/69.0	26.0	23.0	22.0	25.4	17.7	20.2
72.0					26.5/70.4	22.9		24.8	21.9	19.9	24.2	17.1	19.4
74.0						21.8		23.7	20.9	17.7	23.1	16.6	18.7
76.0						21.1/75.5		22.6	19.9	16.8/74.8	22.0	16.1	18.0
78.0								22.5/76.1	19.0		21.0	15.3	17.4
80.0									18.1		20.1	13.4	16.9
82.0									17.6/81.2		19.2/81.8	12.9/80.5	16.4
84.0													16.0
85.0													15.6
88.0													15.4/87.6

(ECT00125E-B)

w/38.10m Tower

Tower length(m)	38.10														
Jib length(m)	24.38			30.48			36.58			42.67			48.77		
Working radius(m) / Tower angle	88°	75°	65°	88°	75°	65°	88°	75°	65°	88°	75°	65°	88°	75°	65°
12.0	170.0/13.8														
14.0	170.0			170.0/15.5											
16.0	170.0			170.0			170.0/17.3								
18.0	170.0			170.0			170.0			166.0/19.1					
20.0	170.0			170.0			170.0			166.0			143.6/20.9		
22.0	151.6			151.2			150.7			150.1			141.4		
24.0	135.3			134.9			134.5			133.8			133.3		
26.0	119.9	103.2/27.2		121.6			121.2			120.5			120.0		
28.0	100.4	99.5		110.5			110.1			109.5			109.0		
30.0	88.9/29.1	91.1		100.9	89.2/30.3		100.8			100.2			99.7		
32.0		83.9		88.1	83.0		92.8	78.2/33.3		92.2			91.7		
34.0		77.6		75.7	76.8		85.9	76.2		85.3			84.8		
36.0		72.1	64.2/36.7	70.0/34.9	71.4		78.6	70.8		79.2	68.9/36.4		78.7		
38.0		68.1/37.5	61.4		66.6		68.0	66.0		73.9	65.1		73.4	61.3/39.4	
40.0			57.4		62.3	55.3/40.6	59.4	61.7		66.6	60.8		68.7	60.1	
42.0			53.9		58.4	53.0	56.7/40.6	57.9		60.1	57.1		63.8	56.4	
44.0			51.1/43.7		56.0/43.3	49.8		54.5	48.3/44.6	53.8	53.6		58.4	53.0	
46.0						47.0		51.4	46.3	47.5	50.6		53.2	49.9	
48.0						44.3		48.5	43.7	46.4/46.3	47.7	42.2/48.5	48.3	47.1	
50.0						42.6/49.4		47.1/49.0	41.4		45.2	40.4	43.5	44.6	
52.0									39.2		42.8	38.3	38.6	42.2	37.1/52.4
54.0									37.2		40.6	36.3	38.5/52.1	40.1	35.6
56.0									35.1/55.1		39.8/54.8	34.4		38.1	33.8
58.0												32.7		36.2	32.1
60.0												31.1		34.5	30.5
62.0												30.5/60.9		34.0/60.5	29.1
64.0															27.7
66.0															26.4
68.0															26.0/66.6

(ECT00126E-B)

Courtesy of Crane.Market

Tower length(m)	38.10											
Jib length(m)	54.86			60.96			67.06		73.15		79.25	
Working radius(m) \ Tower angle	88°	75°	65°	88°	75°	65°	88°	75°	88°	75°	88°	75°
22.0	121.7/22.7											
24.0	119.2			108.4/24.5								
26.0	115.1			104.9			84.4/26.2					
28.0	108.2			101.3			80.1		62.3		46.3/29.8	
30.0	98.9			95.9			75.6		58.7		46.0	
32.0	90.9			90.3			71.7		55.4		43.2	
34.0	84.0			83.4			68.0		52.5		40.7	
36.0	78.0			77.4			64.8		49.8		38.4	
38.0	72.7			72.1			61.8		47.3		36.3	
40.0	67.9			67.3			59.0		45.1		34.4	
42.0	63.7	54.7/42.4		63.1			56.5		43.0		32.6	
44.0	59.9	52.0		59.3	48.9/45.5		54.2		41.1		31.0	
46.0	55.4	49.0		55.9	48.2		52.1		39.3		29.5	
48.0	50.9	46.2		52.7	45.4		50.1	43.8/48.5	37.7		28.1	
50.0	46.7	43.7		48.4	42.9		48.3	41.9	36.2	39.4/51.6	26.8	
52.0	42.8	41.3		44.7	40.6		45.4	39.6	34.8	38.9	25.6	
54.0	39.0	39.2		41.2	38.5		42.1	37.5	33.5	36.8	24.5	29.4/54.6
56.0	35.2	37.2	32.5/56.3	38.0	36.5		38.9	35.6	32.2	34.9	23.4	28.5
58.0	31.7/57.8	35.4	31.1	34.8	34.7		36.0	33.7	31.1	33.0	22.4	27.1
60.0		33.6	29.5	31.7	33.0	28.6/60.2	33.3	32.0	30.1	31.4	21.5	25.9
62.0		32.0	28.1	28.6	31.4	27.3	30.6	30.5	29.1	29.8	20.6	24.7
64.0		30.5	26.7	26.2/63.5	29.9	26.0	28.0	29.0	28.2	28.3	19.8	23.6
66.0		29.1	25.5		28.5	24.7	25.5	27.6	27.0	27.0	19.1	22.6
68.0		28.9/66.2	24.3		27.2	23.6	22.9	26.3	24.8	25.7	18.4	21.7
70.0			23.2		26.0	22.4	21.2/69.2	25.1	22.6	24.5	17.8	20.8
72.0			22.1		24.8	21.4		23.9	20.5	23.3	17.2	20.0
74.0			21.9/72.3			20.4		22.8	18.3	22.2	16.7	19.3
76.0						19.4		21.8	17.2/75.0	21.2	16.2	18.6
78.0						18.5		21.0/77.7		20.2	15.8	17.9
80.0										19.3	14.0	17.3
82.0										18.4	13.3/80.7	16.8
84.0										17.8/83.4		16.3
86.0												15.9
88.0												15.2
90.0												14.8/89.1

(ECT00127E-B)

w/44.20m Tower

Tower length(m)	44.20														
Jib length(m)	24.38			30.48			36.58			42.67			48.77		
Working radius(m) \ Tower angle	88°	75°	65°	88°	75°	65°	88°	75°	65°	88°	75°	65°	88°	75°	65°
14.0	170.0			170.0/15.8											
16.0	170.0			170.0			166.0/17.5								
18.0	170.0			170.0			166.0			149.0/19.3					
20.0	170.0			170.0			166.0			149.0			131.8/21.1		
22.0	151.9			151.5			151.0			149.0			131.8		
24.0	135.6			135.1			134.7			134.1			131.8		
26.0	122.2			121.8			121.4			120.8			120.2		
28.0	103.3	93.9/28.8		110.7			110.4			109.7			109.2		
30.0	89.8/29.4	89.1		101.3	81.6/31.8		101.0			100.4			99.8		
32.0		82.0		90.0	81.1		93.0			92.4			91.9		
34.0		75.9		77.6	75.0		86.1	71.9/34.9		85.4			84.9		
36.0		70.5		70.7/35.1	69.7		78.2	69.0		79.4	63.5/37.9		78.9		
38.0		65.7	56.1/39.3		65.0		69.5	64.4		74.0	63.4		73.5		
40.0		63.1/39.2	54.9		60.8		61.0	60.2		67.9	59.3		68.8	56.7/41.0	
42.0			51.5		57.0	48.6/43.2	57.3/40.8	56.5		61.3	55.6		64.6	54.8	
44.0			48.4		53.6	47.4		53.2		55.0	52.2		59.3	51.5	
46.0			45.5		52.2/44.9	44.7		50.1	42.5/47.1	49.7	49.2		54.1	48.5	
48.0			45.2/46.3			42.2		47.3	41.5	46.9/46.5	46.5		49.2	45.8	
50.0						39.9		44.8	39.3		44.0	37.1/51.1	44.4	43.3	
52.0						37.7		44.0/50.6	37.2		41.7	36.2	39.5	41.0	
54.0									35.3		39.5	34.3	38.6/52.3	38.9	32.7/55.0
56.0									33.5		37.5	32.5		37.0	31.8
58.0									32.0/57.7		37.2/55.4	30.9		35.2	30.2
60.0												29.4		33.5	28.7
62.0												28.0		31.9	27.3
64.0												27.0/63.4		31.8/62.1	26.0
66.0															24.8
68.0															23.6
70.0															23.0/69.2

(ECT00128E-B)

Tower length(m)	44.20										
Jib length(m)	54.86			60.96		67.06		73.15		79.25	
Working radius(m) \ Tower angle	88°	75°	65°	88°	75°	88°	75°	88°	75°	88°	75°
22.0	121.5/22.9										
24.0	119.6			106.2/24.7							
26.0	115.5			105.0		82.5/26.4					
28.0	108.4			101.9		78.8		62.3/28.2			
30.0	99.1			96.5		74.5		59.1		44.5	
32.0	91.1			90.5		70.6		55.8		41.9	
34.0	84.2			83.6		67.1		52.8		39.5	
36.0	78.1			77.5		63.9		50.1		37.3	
38.0	72.8			72.2		61.0		47.6		35.3	
40.0	68.1			67.5		58.3		45.3		33.5	
42.0	63.8			63.2		55.8		43.2		31.8	
44.0	60.0	50.5		59.4		53.6		41.3		30.2	
46.0	56.2	47.6		56.0	45.3/47.1	51.5		39.5		28.8	
48.0	51.7	44.8		52.8	44.1	49.6		37.9		27.4	
50.0	47.5	42.4		49.0	41.6	47.8	40.5/50.1	36.3		26.2	
52.0	43.5	40.1		45.4	39.3	46.0	38.3	34.9	36.4/53.2	25.0	
54.0	39.7	38.0		41.9	37.3	42.6	36.3	33.6	35.5	23.9	
56.0	35.9	36.1		38.6	35.3	39.5	34.4	32.4	33.6	22.9	28.6/56.2
58.0	32.0	34.3	28.5/58.9	35.4	33.6	36.6	32.6	31.2	31.9	22.0	27.4
60.0		32.5	27.6	32.3	31.9	33.8	30.9	30.2	30.2	21.1	26.1
62.0		31.0	26.1	29.2	30.4	31.1	29.4	29.2	28.7	20.2	24.9
64.0		29.6	24.6	26.5/63.7	28.9	28.5	28.0	28.3	27.3	19.5	23.8
66.0		28.2	23.3		27.5	26.0	26.6	27.5	25.9	18.8	22.8
68.0		27.0/67.8	22.1		26.3	23.4	25.4	25.3	24.7	18.1	21.9
70.0			20.9		25.1	21.5/69.5	24.2	23.1	23.5	17.5	21.0
72.0			19.8		23.9		23.1	21.0	22.4	16.9	20.2
74.0			18.8		23.1/73.5		22.0	18.8	21.4	16.4	19.4
76.0			18.4/74.9				21.0	17.5/75.2	20.4	15.9	18.7
78.0							20.0		19.4	15.5	18.0
80.0							19.4/79.3		18.5	14.4	17.4
82.0									17.6	13.5/80.9	16.6
84.0									16.7		15.6
86.0									16.2/85.0		14.7
88.0											13.9
90.0											13.1
92.0											12.8/90.7

(ECT00129E-B)

w/50.29m Tower

Tower length(m)	50.29														
Jib length(m)	24.38			30.48			36.58			42.67			48.77		
Working radius(m) \ Tower angle	88°	75°	65°	88°	75°	65°	88°	75°	65°	88°	75°	65°	88°	75°	65°
14.0	170.0/14.2														
16.0	170.0			166.0			149.0/17.7								
18.0	170.0			166.0			149.0			131.5/19.5					
20.0	170.0			166.0			149.0			131.5			131.5/21.3		
22.0	152.0			151.5			149.0			131.5			131.5		
24.0	135.7			135.2			134.8			131.5			131.5		
26.0	122.3			121.9			121.5			120.8			120.3		
28.0	105.9			110.8			110.4			109.7			109.2		
30.0	90.5/29.6	85.4/30.4		101.4			101.1			100.4			99.9		
32.0		79.9		91.9	74.6/33.4		93.1			92.4			91.9		
34.0		73.9		79.6	72.9		86.1			85.5			85.0		
36.0		68.7		71.3/35.3	67.8		79.7	65.9/36.5		79.4			78.9		
38.0		64.0			63.2		70.9	62.5		74.1	58.4/39.5		73.6		
40.0		59.9	48.9/41.9		59.1		62.4	58.5		69.0	57.4		68.8		
42.0		58.4/40.7	48.7		55.5		57.8/41.0	54.8		62.4	53.8		64.6	52.2/42.6	
44.0			45.8		52.1	42.4/45.8		51.6		56.1	50.6		60.2	49.9	
46.0			43.2		49.1	42.1		48.6		49.8	47.7		55.0	47.0	
48.0			40.7		48.4/46.5	39.8		45.9	37.2/49.7	47.3/46.8	45.0		50.1	44.3	
50.0			39.7/48.8			37.8		43.4	36.9		42.6		45.3	41.9	
52.0						35.6		41.1	34.9		40.3	31.5/53.6	40.4	39.7	
54.0						33.7		40.9/52.2	33.0		38.3	31.1	39.2/52.5	37.6	
56.0						33.2/54.6			31.2		36.3	29.4		35.7	27.2/57.5
58.0									29.6		34.6/57.9	27.7		34.0	26.8
60.0									28.0			26.2		32.3	25.3
62.0									27.8/60.3			24.8		30.8	23.9
64.0												23.5		29.6/63.7	22.6
66.0												22.3			21.3
68.0															20.2
70.0															19.1
72.0															18.2/71.8

(ECT00130E-B)

Tower length(m)	50.29										
Jib length(m)	54.86			60.96		67.06		73.15		79.25	
Working radius(m) \ Tower angle	88°	75°	65°	88°	75°	88°	75°	88°	75°	88°	75°
22.0	114.0/23.1										
24.0	114.0			106.2/24.9							
26.0	114.0			105.1		82.5/26.7					
28.0	108.5			102.5		79.2		62.3/28.4			
30.0	99.1			97.1		74.9		59.4		44.5/30.2	
32.0	91.1			90.5		71.0		56.1		42.2	
34.0	84.2			83.6		67.5		53.1		39.7	
36.0	78.2			77.5		64.2		50.3		37.5	
38.0	72.8			72.2		61.3		47.8		35.5	
40.0	68.1			67.5		58.6		45.5		33.6	
42.0	63.9			63.3		56.1		43.4		31.9	
44.0	60.0	46.5/45.6		59.4		53.8		41.5		30.4	
46.0	56.6	45.9		56.0		51.7		39.7		28.9	
48.0	52.5	43.3		52.9	41.7/49.7	49.8		38.0		27.6	
50.0	48.3	40.9		49.7	40.1	48.0	37.2/51.7	36.5		26.3	
52.0	44.3	38.7		45.9	37.9	46.3	36.9	35.1		25.1	
54.0	40.4	36.7		42.4	35.9	43.2	34.9	33.7	33.4/54.8	24.0	
56.0	36.6	34.8		39.1	34.0	40.0	33.0	32.5	32.3	23.0	28.6/57.8
58.0	32.7	33.0		36.0	32.3	37.1	31.3	31.4	30.6	22.1	28.5
60.0	32.3/58.2	31.4	22.9/61.5	32.9	30.7	34.3	29.7	30.3	29.0	21.2	27.1
62.0		29.9	22.5	29.8	29.2	31.6	28.2	29.3	27.5	20.3	25.9
64.0		28.5	21.2	26.7/63.9	27.8	29.0	26.8	28.4	25.9	19.5	24.7
66.0		27.1	20.0		26.5	26.5	25.5	27.6	24.4	18.8	23.6
68.0		25.9	18.8		25.2	23.9	24.1	25.7	23.0	18.2	22.2
70.0		25.0/69.4	17.8		24.0	21.7/69.7	22.8	23.5	21.7	17.5	20.8
72.0			16.7		22.8		21.6	21.4	20.5	17.0	19.6
74.0			15.8		21.7		20.5	19.2	19.3	16.4	18.4
76.0			14.9		21.1/75.1		19.4	17.6/75.4	18.2	16.0	17.3
78.0			14.2/77.5				18.4		17.2	15.6	16.3
80.0							17.5		16.2	14.8	15.3
82.0							17.1/80.8		15.3	13.7/81.1	14.3
84.0									14.5		13.4
86.0									13.6		12.6
88.0									13.4/86.6		11.8
90.0											11.0
92.0											10.3
94.0											10.2/92.3

(ECT00131E-B)

w/56.39m Tower

Tower length(m)	56.39														
Jib length(m)	24.38			30.48			36.58			42.67			48.77		
Working radius(m) \ Tower angle	88°	75°	65°	88°	75°	65°	88°	75°	65°	88°	75°	65°	88°	75°	65°
14.0	166.0/14.4														
16.0	166.0			149.0/16.2											
18.0	166.0			149.0			131.5			131.5/19.7					
20.0	166.0			149.0			131.5			131.5			114.0/21.5		
22.0	152.2			149.0			131.5			131.5			114.0		
24.0	135.8			135.4			131.5			131.5			114.0		
26.0	122.4			122.0			121.6			120.9			114.0		
28.0	108.7			110.9			110.5			109.9			109.3		
30.0	91.0/29.8	77.8/31.9		101.5			101.2			100.5			100.0		
32.0		77.6		93.5			93.2			92.5			92.0		
34.0		71.8		81.3	68.2/35.0		86.2			85.6			85.1		
36.0		66.7		71.7/35.5	65.7		80.1			79.5			79.0		
38.0		62.2			61.3		72.3	60.5		74.1			73.7		
40.0		58.2			57.3		63.7	56.6		69.4	53.6/41.1		68.9		
42.0		54.5			53.8		58.2/41.2	53.1		63.3	52.1		64.7		
44.0		54.0/42.3	41.1/44.5		50.6			49.9		57.0	48.9		60.8	48.0/44.1	
46.0			39.2		47.7			47.1		50.7	46.1		55.9	45.3	
48.0			36.8		44.9	35.0/48.4		44.5		47.5/47.0	43.5		50.9	42.8	
50.0			34.7			33.3		42.1			41.1		46.1	40.4	
52.0			33.9/51.4			31.3		39.8	30.1/52.3		38.9		41.2	38.3	
54.0						29.5		38.0/53.8	28.6		36.9		39.5/52.7	36.3	
56.0						27.9			27.0		35.1	25.4/56.2		34.4	
58.0						27.0/57.1			25.4		33.3	24.0		32.7	
60.0									24.0		32.1/59.5	22.6		31.1	21.1/60.1
62.0									22.7			21.3		29.5	19.9
64.0									22.2/62.9			20.1		28.0	18.7
66.0												19.0		27.2/65.2	17.6
68.0												17.9			16.6
70.0												17.6/68.6			15.6
72.0															14.6
74.0															13.8
76.0															13.6/74.3

(ECT00132E-B)

Courtesy of Crane.Market

Tower length(m)	56.39							
Jib length(m)	54.86		60.96		67.06		73.15	79.25
Working radius(m) / Tower angle	88°	75°	88°	75°	88°	75°	88°	88°
22.0	114.0/23.3							
24.0	114.0		106.0/25.1					
26.0	114.0		105.2		82.5/26.9			
28.0	108.6		103.1		79.8		62.3/28.7	
30.0	99.2		97.6		75.4		59.8	44.5/30.4
32.0	91.2		90.6		71.4		56.5	42.4
34.0	84.3		83.7		67.8		53.4	40.0
36.0	78.2		77.6		64.6		50.6	37.8
38.0	72.9		72.3		61.6		48.1	35.7
40.0	68.2		67.5		58.9		45.8	33.8
42.0	63.9		63.3		56.4		43.7	32.1
44.0	60.1		59.5		54.1		41.7	30.5
46.0	56.6	42.7/47.2	56.0		51.9		39.9	29.1
48.0	53.1	41.7	52.9		50.0		38.2	27.7
50.0	48.9	39.4	50.0	38.2/50.2	48.2		36.7	26.4
52.0	44.9	37.2	46.4	36.2	46.5	33.4/53.3	35.2	25.2
54.0	41.0	35.3	42.9	34.0	43.6	32.7	33.9	24.1
56.0	37.2	33.4	39.6	32.1	40.5	30.7	32.6	23.1
58.0	33.4	31.6	36.4	30.2	37.5	28.8	31.5	22.1
60.0	32.5/58.4	29.9	33.4	28.5	34.7	27.1	30.4	21.3
62.0		28.3	30.3	26.9	32.0	25.5	29.4	20.4
64.0		26.8	27.1	25.4	29.4	24.0	28.5	19.6
66.0		25.4	26.9/64.2	24.0	26.9	22.6	27.6	18.9
68.0		24.1		22.7	24.3	21.3	26.0	18.2
70.0		22.9		21.5	21.9/69.9	20.1	23.9	17.6
72.0		22.3/71.0		20.4		18.9	21.7	17.0
74.0				19.3		17.9	19.6	16.5
76.0				18.3		16.9	17.8/75.6	16.0
78.0				18.0/76.7		15.9		15.6
80.0						15.0		15.1
82.0						14.2		13.8/81.3
84.0						14.0/82.4		

(ECT00133E-B)

w/62.48m Tower

Tower length(m)	62.48													
Jib length(m)	24.38			30.48			36.58			42.67			48.77	
Working radius(m) / Tower angle	88°	75°	65°	88°	75°	65°	88°	75°	65°	88°	75°	65°	88°	75°
14.0	149.0/14.6													
16.0	149.0			131.5/16.4										
18.0	149.0			131.5			131.5/18.2							
20.0	149.0			131.5			131.5			114.0			114.0/21.7	
22.0	149.0			131.5			131.5			114.0			114.0	
24.0	135.8			131.5			131.5			114.0			114.0	
26.0	122.4			122.0			121.6			114.0			114.0	
28.0	111.3			110.9			110.5			109.8			109.3	
30.0	91.5			101.5			101.2			100.5			99.9	
32.0		70.7/33.5		93.5			93.1			92.5			91.9	
34.0		69.4		83.1			86.2			85.5			85.0	
36.0		64.5		72.2/35.7	62.2/36.6		80.1			79.5			79.0	
38.0		60.2			59.1		73.4	55.3/39.6		74.1			73.6	
40.0		56.3			55.3		64.8	54.5		69.4			68.9	
42.0		52.8			51.9		58.4/41.5	51.2		64.3	49.0/42.7		64.6	
44.0		49.7/43.9			48.8			48.1		58.0	47.0		60.8	43.0/45.7
46.0			32.8/47.0		46.0			45.3		51.7	44.1		56.6	42.7
48.0			31.8		43.4			42.7		47.8/47.2	41.4		51.5	40.0
50.0			29.9		41.4/49.6	27.5/50.9		40.3			39.0		46.7	37.6
52.0			28.1			26.6		38.0			36.8		41.9	35.4
54.0			26.4			25.0		36.0	23.4/54.9		34.8		39.7/52.9	33.4
56.0						23.5		34.7/55.4	22.5		32.9			31.5
58.0						22.1			21.2		31.1	19.2/58.8		29.8
60.0						21.0/59.7			19.9		29.5	18.5		28.2
62.0									18.7		28.7/51.1	17.3		26.7
64.0									17.6			16.2		25.3
66.0									16.8/65.4			15.2		24.0
68.0												14.2		23.5/66.8
70.0												13.3		
72.0												12.8/71.2		

(ECT00134E-B)

Tower length(m)	62.48							
Jib length(m)	54.86		60.96		67.06		73.15	79.25
Working radius(m) / Tower angle	88°	75°	88°	75°	88°	75°	88°	88°
22.0	114.0/23.5							
24.0	114.0		96.0/25.3					
26.0	113.2		96.0		82.6/27.1			
28.0	108.1		96.0		80.4		62.3/28.9	
30.0	99.2		96.0		75.9		60.2	44.5/30.7
32.0	91.2		90.5		71.9		56.8	42.7
34.0	84.3		83.6		68.2		53.7	40.2
36.0	78.2		77.6		64.9		50.9	38.0
38.0	72.9		72.2		61.9		48.4	35.9
40.0	68.1		67.5		59.1		45.9	34.0
42.0	63.9		63.3		56.6		43.9	32.3
44.0	60.1		59.5		54.3		41.9	30.7
46.0	56.6		56.0		52.2		40.1	29.2
48.0	53.5	38.0/48.8	52.9		50.2		38.4	27.8
50.0	49.4	36.5	50.0	33.0/51.8	48.3		36.8	26.6
52.0	45.4	34.3	47.1	32.8	46.6		35.4	25.4
54.0	41.5	32.3	43.5	30.8	44.1	28.3/54.9	34.0	24.3
56.0	37.7	30.4	40.2	28.9	40.9	27.2	32.8	23.2
58.0	33.9	28.6	37.0	27.2	37.9	25.5	31.6	22.3
60.0	32.7/58.6	27.0	33.8	25.6	35.1	23.9	30.5	21.3
62.0		25.5	30.8	24.1	32.4	22.4	29.5	20.5
64.0		24.1	27.7	22.7	29.8	21.0	28.6	19.7
66.0		22.7	27.1/64.4	21.4	27.3	19.7	27.7	19.0
68.0		21.5		20.1	24.7	18.4	26.4	18.3
70.0		20.4		19.0	22.1	17.3	24.2	17.7
72.0		19.3		17.9	22.0/70.1	16.2	22.0	17.1
74.0		19.0/72.5		16.9		15.2	19.9	16.5
76.0				15.9		14.2	17.9/75.8	16.1
78.0				15.0		13.6		15.7
80.0				14.9/78.3		12.5		15.3
82.0						11.7		13.9/81.6
84.0						11.0		

(ECT00135E-B)

w/68.58m Tower

Tower length(m)	68.58											
Jib length(m)	24.38			30.48			36.58		42.67		48.77	
Working radius(m) / Tower angle	88°	75°	65°	88°	75°	65°	88°	75°	88°	75°	88°	75°
14.0	131.5/14.8											
16.0	131.5			131.5/16.6								
18.0	131.5			131.5			114.0/18.4					
20.0	131.5			131.5			114.0		114.0/20.2			
22.0	131.5			130.1			114.0		114.0		114.0	
24.0	127.7			123.4			114.0		114.0		110.5	
26.0	119.6			117.3			113.5		109.0		105.3	
28.0	110.7			110.3			108.0		104.1		100.1	
30.0	94.0			101.6			101.2		99.3		95.6	
32.0	91.9/30.2			93.5			93.2		92.5		91.6	
34.0		63.1/35.1		84.6			86.2		85.6		85.0	
36.0		61.0		72.4/35.9			80.1		79.5		79.0	
38.0		56.8			55.9/38.1		74.7		74.1		73.6	
40.0		53.1			52.3		66.1	49.5/41.2	69.4		68.9	
42.0		49.7			49.0		58.7/41.7	48.2	65.1		64.6	
44.0		46.5			45.9			45.2	58.8	42.9/44.2	60.8	
46.0		44.5/45.5			43.2			42.4	52.5	40.5	57.2	38.2/47.3
48.0			25.6/49.6		38.3			39.9	48.0/47.4	38.0	52.2	37.3
50.0			25.3		37.0/51.2			37.6		35.7	47.4	35.0
52.0			23.6			21.5/53.5		35.5		33.7	42.6	32.9
54.0			22.1			21.1		33.5		31.7	39.7/53.1	31.0
56.0			20.7			19.8		31.7		29.9		29.2
58.0			20.3/56.7			18.5		30.9/56.9		28.3		27.6
60.0						17.3				26.7		26.0
62.0						16.2				25.3		24.6
64.0						16.1/62.3				24.8/62.7		23.2
66.0												22.0
68.0												20.8
70.0												20.6/68.4

(ECT00136E-B)

Tower length(m)	68.58					
Jib length(m)	54.86		60.96	67.06	73.15	79.25
Working radius(m) / Tower angle	88°	75°	88°	88°	88°	88°
22.0	96.0/23.7					
24.0	96.0		96.0/25.5			
26.0	96.0		96.0	82.6/27.3		
28.0	96.0		92.3	80.9	62.3/29.1	
30.0	91.7		88.4	76.3	60.6	44.5/30.9
32.0	87.8		84.7	72.3	57.2	43.0
34.0	84.2		80.7	68.6	54.0	40.5
36.0	78.2		77.5	65.2	51.2	38.2
38.0	72.9		72.2	62.2	48.6	36.1
40.0	68.1		67.5	59.4	46.1	34.2
42.0	63.9		63.3	56.9	44.1	32.5
44.0	60.1		59.5	54.5	42.1	30.9
46.0	56.6		56.0	52.4	40.3	29.4
48.0	53.5		52.9	50.4	38.6	28.0
50.0	50.2	32.8/50.3	50.0	48.5	37.0	26.7
52.0	46.1	31.1	47.4	46.6	35.5	25.5
54.0	42.2	29.2	44.0	44.2	34.2	24.4
56.0	38.3	27.4	40.6	41.3	32.9	23.3
58.0	34.5	25.8	37.4	38.3	31.7	22.4
60.0	32.8/58.9	24.2	34.3	35.5	30.6	21.4
62.0		22.8	31.2	32.8	29.6	20.6
64.0		21.5	28.1	30.2	28.7	19.8
66.0		20.2	27.2/64.6	27.6	27.8	19.1
68.0		19.1		25.1	26.7	18.4
70.0		18.0		22.5	24.5	17.7
72.0		16.9		22.1/70.3	22.4	17.1
74.0		16.0			20.2	16.6
76.0		15.9/74.1			18.0	16.1
78.0						15.7
80.0						15.4
82.0						14.0/81.8

(ECT00137E-B)

Notes-Luffing towercrane capacities

1. Capacities included in these charts are the maximum allowable, and are based on machine standing level on firm supporting surface under ideal job conditions.
2. Capacities are in metric tons, and are based on 78% of minimum tipping load, or based on the other factor of machine structural strength limitation.
3. Capacities are based on freely suspended loads and make no allowance for such factors as the effect of wind, sudden stopping of loads, supporting surface conditions, and operating speeds. Operator must reduce load ratings to take such conditions into account. Deduction from rated capacities must be made for weight of hook block, weighted ball/hook, sling, spreader bar, or other suspended gear. Hook block weight is as follows;
   170t·····6.5ton 15t·····1.3ton
4. S-Ⅱ counterweight arrangement of 172ton counterweight plus 78ton carbody weight is required; S-Ⅰ counterweight arrangement with an 130ton upper counterweight is also available, and capacities under its arrangement are detailed. If required, please consult us or nearest distributor.
5. All capacities are rated for 360° swing.
6. Least stable rated condition is over the side.
7. Attachment must be erected and lowered over the front of the crawler mounting.
8. Working radii shown above are at loading condition.
9. The machine can be steplessly operated at tower angle between 65 and 88 degrees safely according to tower boom/jib combination; towercrane capacities available under any tower angle are automatically set up by a computerized automatic over-load preventing system, Load Moment Limiter.
10. The machine must be operated in accordance with correct tower boom and jib combination shown below.

Combination Table

Tower length (m) \ Jib length (m)	24.38	30.48	36.58	42.67	48.77	54.86	60.96	67.06	73.15	79.25
32.00	●	●	●	●	●	●	●	●	◎	◎
38.10	●	●	●	●	●	●	●	◎	◎	◎
44.20	●	●	●	●	●	●	◎	◎	◎	◎
50.29	●	●	●	●	●	●	◎	◎	◎	◎
56.39	●	●	●	●	●	◎	◎	◎	◎	◎
62.48	●	●	●	●	◎	◎	◎	◎	○	○
68.58	●	●	◎	◎	◎	◎	○	○	○	○

Notes:

The meaning of symbols shown in the above table is as follows:

1. Symbol of "●" : Possible to luff tower between 88° thru 65°;
2. Symbol of "◎" : Possible to luff tower between 88° thru 75°;
3. Symbol of "○" : No tower boom luffing is available; An 88° tower angle is only allowed for operation;

Courtesy of Crane.Market

Liftcrane Working Ranges

■w/H650 heavy duty top section

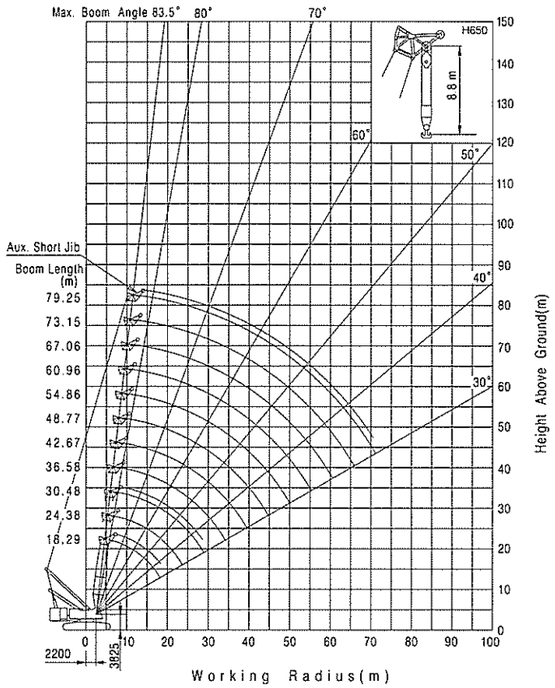

■w/L300 light duty top section

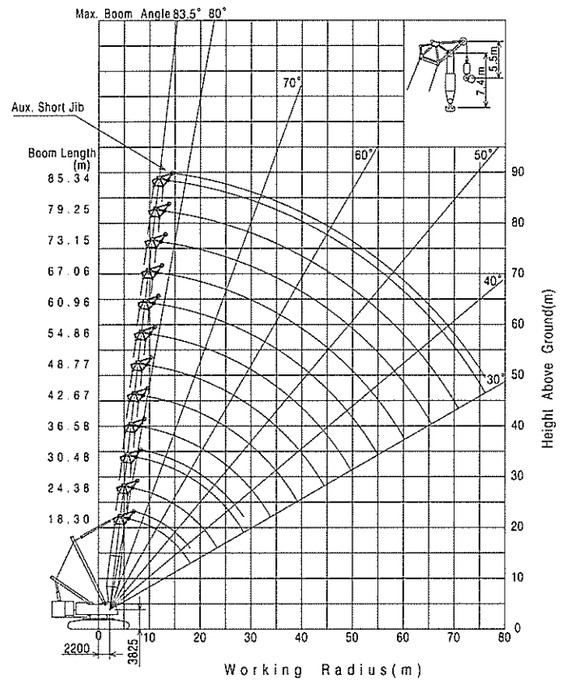

■w/L170 light duty top section

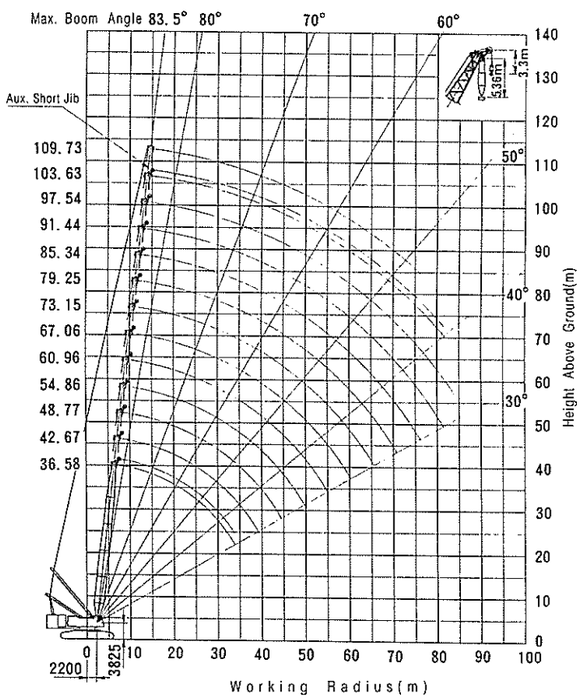

Luffing Towercrane Working Ranges

■w/Max. tower boom

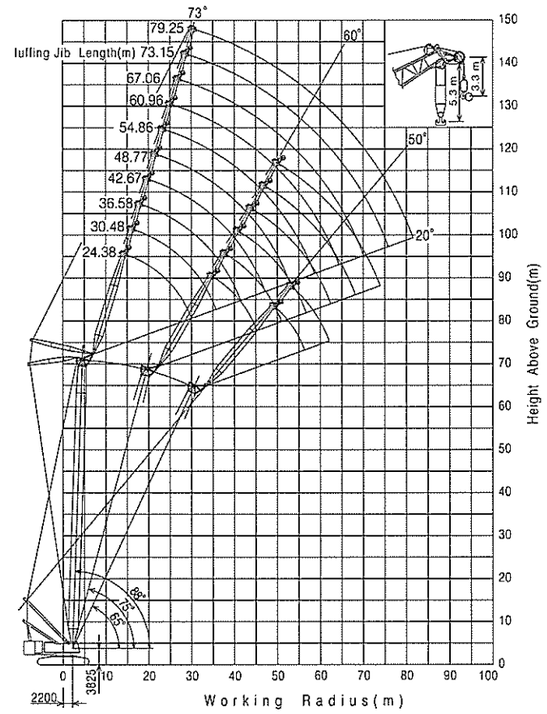

■w/Min. tower boom

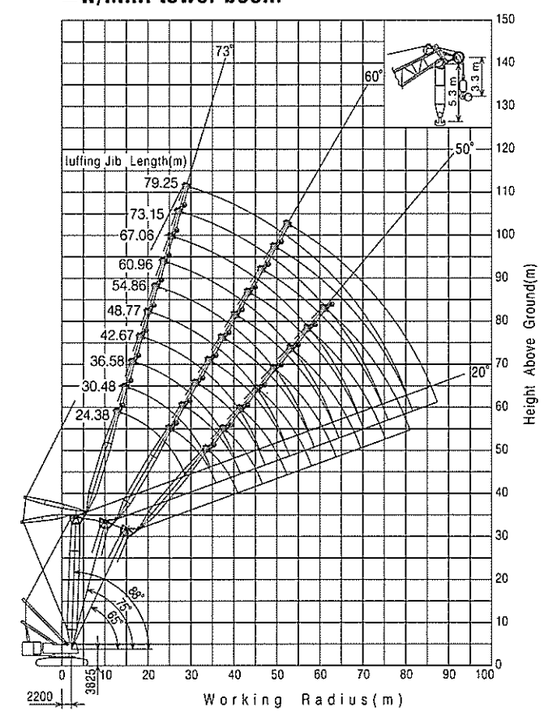

Courtesy of Crane.Market

General Dimensions & Gist Spec.

■General Dimensions:

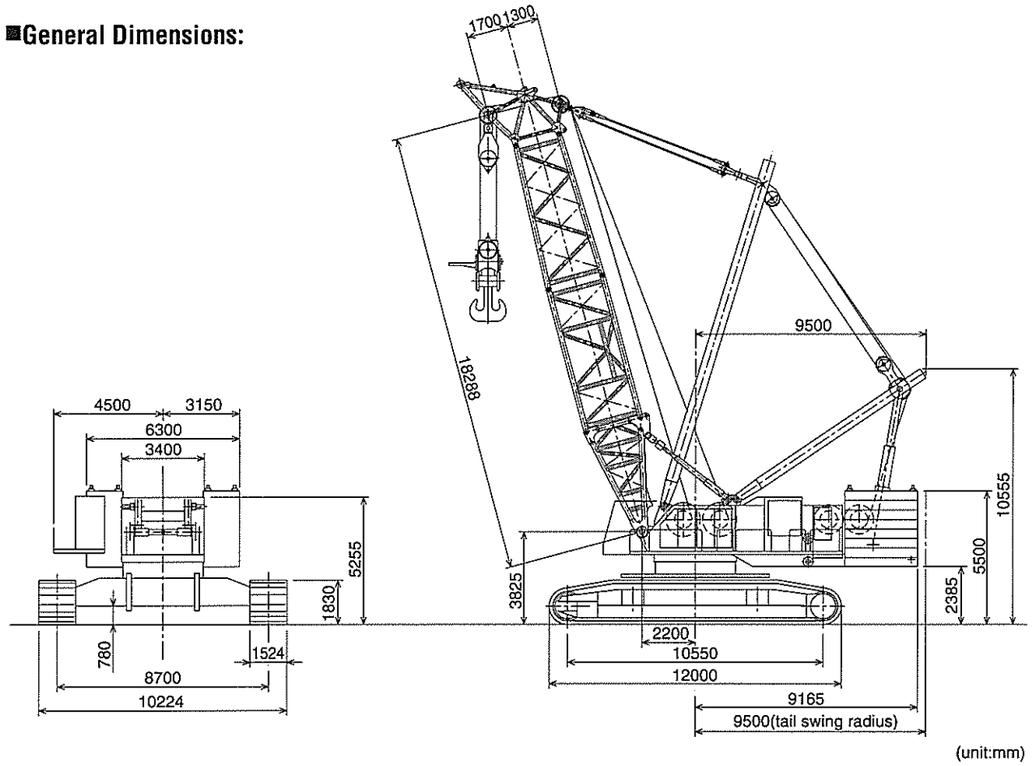

(unit:mm)

Gist of Specification:

Description		Kind of boom application	Liftcrane application			Luffing towercrane application S-Ⅱ
			H650 heavd duty top sect. S-Ⅱ	L300 light duty top sect. S-Ⅱ	L170 light duty top sect. S-Ⅱ	
Cap. & boom spec.		Max. lifting capacity (t×m)	650t×6m	325t×6m	170t×20m	170t×20m
		Basic boom/tower length (m)	18.3	18.3	36.6	32.0
		Max. boom/tower length (m)	48.8	85.3	109.7	68.6
		Tower jib length (m)	—	—	—	24.4~79.2m
		Max. tower + jib length (m)	—	—	—	68.6m+79.2m
Working speeds		Front main drum rope speed (m/min)	2-stage; 86/50			
		Rear main drum rope speed (m/min)	2-stage; 86/50			
		Boom hoist drum rope speed (m/min)	40			
		Jib hoist drum rope speed (m/min)	—			2-stage; 79/61
		Swing speed (min^{-1})	0.8			
		Travel speed (km/n)	2-stage; 0.8/0.3			
Mass		Working mass (t)	Approx. 610	Approx. 601	Approx. 593t	Approx. 650t
	Att.	Boom length (m)	18.3	18.3	36.6	68.6m+79.2m
		Kind of hook block	650t	325t	170t	170t
Engine		Make & model	Cummins KTTA19-C700			
		Rated output (kW@min^{-1})	522@2,100			
		Fuel tank cap. (liter)	850			

Note: S-Ⅰ counterweight arrangement with an 130ton upper counterweight is also available for each boom application instead of S-Ⅱ.

Boom/Jib Configuration

Kind of boom application				Liftcrane application			Luffing towercrane application
Kind of boom top section				H650 heavy duty top sect.	L300 light duty top sect.	L170 light duty top sect.	
Counterweight arrongement				S-Ⅱ	S-Ⅱ	S-Ⅱ	S-Ⅱ
Kind of counterweight	Upper ctwt	Std.	130t	○	○	○	○
		Extra	42t	○	○	○	○
	Carbody weight		78t	○	○	○	○
Max. boom or boom+jib length	Boom			48.8	85.3	109.7	68.6
	Boom+jib			—	—	—	66.6+79.2
Heavy duty boom	No	Kind of boom	Length	—	—	—	—
	11	Bottom sect.	4.572	1	1	1	1
	12	Bottom ext.	6.096	1	1	1	1
	13	Tapered ext.	6.096	1	1	1	1
	14	Top sect.(H650/L300)	1.524	1	1	—	—
	15	6.1m ext.	6.096	—	1	1	—
	16	12.2m ext.	12.192	—	3	3	3
	17	12.2m HL ext.	12.192	—	2	2	1
Light duty boom/luffing jib	21	6.1m special ext.	6.096	—	—	1	—
	22	6.1m ext.	6.096	—	—	—	1
	23	12.2m ext.	12.192	—	—	1	5
	24	Top sect.(L170)	7.62	—	—	1	1
	25	Tower head sect.(L300)	3.048	—	—	—	1
	26	Jib bottom sect.	4.572	—	—	—	1
	—	Rear post	—	—	—	—	1
	—	Front post	—	—	—	—	1

Note: 1. No. of quantity of boom/jib shown above each Indicates when the longest one of each boom application .

2. In the case that the top section H650/L300 is used as the tower head section under luffing towercrane application, it is used as L300, and its length is 3.048m from center of boom connecting lug hole to center of luffing jib foot pin hole.

3. S-Ⅰ counterweight arrangement with an 130ton upper counterweight is also available for each boom application. If the detail(s) with lifting performance is required, please consult us or nearest distributor.

4. Live mast is required for each boom application.

Courtesy of Crane.Market

Transport Data

■Basic machine:

	No	Description	Mass	Q'ty	Dimensions L×W×H	Remarks
Superstructure	A1	Superstructure, front			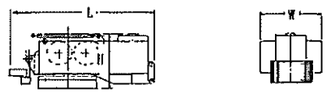	
			41t	1	(8.09m×3.40m×2.95m)	w/out winch drum unit, T.T.B. & boom backstops
			55t	1	(8.09m×3.40m×3.09m)	w/out winch drum unit, & boom backstops
			72t	1	(8.09m×3.40m×3.26m)	includes all of a 3-kind of components
		Turntable Bearing	14t	1	(3.76m×3.40m×1.64m)	
		Winch drum unit	15t	1	(3.68m×3.36m×1.74m)	w/out cables of approx. 10t
		Boom backstops	@1.0t	2	(3.85m×0.35m×0.40m)	
	A2	Superstructure, rear			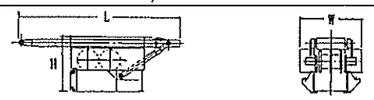	
			22t	1	(4.80m×3.30m×2.57m)	w/out A-frame gantry
			40t	1	(9.52m×3.30m×3.33m)	includes A-frame gantry
		A-frame gantry	18t	1	(9.52m×2.55m×2.67m)	
	A3	Operator's cab	4t	1	(3.50m×2.56m×2.65m)	includes catwalks
	A4	Live mast	11t	1	(15.1m×2.50m×1.00m)	w/out bridle
Undercarriage	B1	Crawer side frame			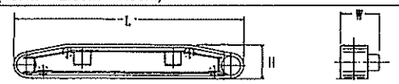	
			@32t	2	(11.5m×2.06m×1.48m)	w/out track shoes and track rollers
			@54t	2	(12.0m×2.06m×1.83m)	
		Track shoe	@19t	2	(10.00m×1.53m×1.20m)	a 3-row folding is applied for "L" dimension
	B2	Axle beam			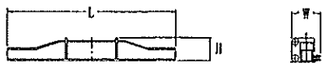	
			@23.5t	2	(9.68m×1.75m×1.56m)	
	B3	Carbody frame			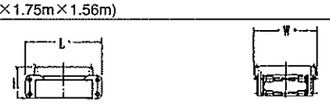	
			30.6t	1	(4.28m×3.40m×1.90m)	w/out axle pins
			33t	1	(4.28m×3.40m×1.90m)	
Counter-weight	C1	Upper ctwt base weight	@12.5t	2	(3.00m×1.96m×1.00m)	
	C2	Upper /carbody weight	@10.5t	20	(3.00m×1.50m×0.53m)	14pcs. for upper and 6pcs. for carbody
	C3	Carbody weight	@7.5t	2	(3.25m×2.30m×1.56m)	

■Front-end attachment:

	No	Description	Mass	Dimensions L	W	H	Remarks
Booms & jibs	E1	Bottom sect + bottom ext.	16.0t	11.02m	3.0m	2.9m	w/reeving winch
	E2	Tapered ext.	4.0t	6.4m	2.9m	2.55m	
	E3	Top sect.(H650/L300)	8.2t	4.9m	2.8m	2.9m	w/out a 10-hanger sheave block
	E4	6.1m HD ext.	4.0t	6.4m	2.9m	2.55m	
	E5	12.2m HD ext.	7.2t	12.5m	2.9m	2.55m	w/out center deflector roller
	E6	12.2m HL ext.	6.5t	12.5m	2.9m	2.55m	w/out center deflector roller
	E7	6.1m special ext.	2.4t	6.3m	2.4m	2.1m	
	E8	6.1m LD ext.	2.0t	6.3m	2.4m	2.1m	
	E9	12.2m LD ext.	3.5t	12.5m	2.4m	2.1m	
	E10	LD top sect(L170)	6.2t	8.6m	2.4m	2.3m	
	E11	Jib bottom sect.	7.2t	5.0m	2.9m	2.1m	

Note: The figures shown above are indicated In the case that deflector roller is housed within boom/jib, and skywalk is attached .

MEMO

Courtesy of Crane.Market