GROVE®

TMS500E

product guide

features

- 40 ton (40 mt) Capacity
- 29 ft.-95 ft. (8.8-29 m) 4 section, full power synchronized boom
- 26 ft.-45 ft. (7.9-13.7 m) offsettable telescopic swingaway extension
- Optional 8,460 lb. (3837 kg) heavy counterweight package
- Rear air suspension with shock absorbers
- 300 bhp (224 kw) Cummins diesel engine

contents

Features	2
Specifications	3
Dimensions	5
Counterweight Configurations	6
Working Range	7
Main Boom Charts	8
Telescopic Swingaway Charts	9
Standard Counterweight Charts	11
Light Counterweight Charts	15
Load Handling	19

Truck Mounted Crane

Manitowoc Crane Group

Courtesy of Crane.Market

features

26 ft. - 45 ft. telescoping swingaway extension with offset up to 30˚ maximizes up and over capacity.

Rear air suspension over walking beams with shock absorbers makes a comfortable ride even at max speed of 65 mph (105 Km/h)

Standard aluminum rims save weight and add aesthetic value

All steel fabricated superstructure cab has padded acoustical lining for sound suppression, safety glass and excellent visibility under close working conditions.

Courtesy of Crane.Market

Superstructure

Boom

29 ft. - 95 ft. (8.8 m - 29 m) four-section, full power boom. Maximum Tip Height: 102.5 ft. (31.2 m).

Telescopic Swingaway Extension

26 ft. - 45 ft. (7.92 m - 13.7 m) telescoping offsettable swingaway extension. Offsettable at 0˚ and 30˚. Stows alongside base boom section. Maximum Tip Height: 146 ft. (44.5 m)

Boom Nose

Four nylatron sheaves mounted on heavy duty tapered roller bearings with removable pin-type rope guards. Quick reeve type boom nose. *Optional removable/stowable auxiliary boom nose with removable pin type rope guard.

Boom Elevation

One double-acting hydraulic cylinder with integral holding valve provides elevation from -3˚ to 76˚.

Load Moment & Anti-Two Block System

Standard “Graphics Display” load moment and anti-two block system with audio-visual warning and control lever lockout. These systems provide electronic display of boom angle, length, radius, tip height, counterweight, relative load moment, maximum permissible load, load indication and warning of impending two-block condition. The standard **“Work Area Definition System”** allows the operator to pre-select and define safe working areas. If the crane approaches the pre-set limits, audio-visual warnings aid the operator in avoiding job-site obstructions.

Cab

High vision, galvannealed steel fabricated with acoustical lining and tinted safety glass throughout. Deluxe seat incorporates armrest mounted hydraulic single-axis controllers. Dash panel incorporates gauges for all engine functions. Other standard features include: hot water heater, cab circulating air fan, sliding side and rear windows, sliding skylight with electric wiper, windshield wash/wipe, fire extinguisher, 12v power outlet, and seat belt.

Swing

Planetary swing with foot applied multi-disc brake. Spring applied, hydraulically released swing brake and plunger-type, one position, mechanical house lock operated from cab. 360˚ mechanical swing lock.
Maximum speed: 3.0 RPM.

Counterweight

Standard, consisting of 2,300 lbs. (1 043 kg) on superstructure.
Optional: 8,460 lbs. (3 837 kg) heavy counterweight package.

Hydraulic System

Two main gear pumps with a combined capacity of 127.7 GPM (483 L/m). Maximum operating pressure: 3500 PSI (26.2 MPa). Two individual valve banks. Return line type filter with full flow by-pass protection and service indicator. Replaceable cartridge with micron filtration rating of 2/20/75. 96 gallon (363 L) reservoir. Oil cooler on carrier. System pressure test ports.

Hoist Specifications
Main and Auxiliary Hoists
Model HP15B9-17G

Planetary reduction with automatic spring applied multi-disc brake. Grooved drum. Electronic hoist drum rotation indicator and hoist drum cable followers.

Maximum Single Line Speed:	429 FPM (131 m/min)
Maximum Permissible Line Pull:	11,640 lb. (5 280kg) Standard 6 x 37 class rope
	11,640 lb. (5 280kg) Optional 35 x 7 class rope
Rope Diameter:	5/8 in. (16 mm)
Rope Length:	450 ft. (137 m)
Rope Type:	6 x 37 class EIPS IWRC *Optional 35 x 7 class rotation resistant
Maximum Rope Stowage:	596 ft. (181 m)

**Denotes optional equipment*

Courtesy of Crane.Market

specifications

Carrier

4

Chassis
Box section frame fabricated from high-strength, alloy steel. Integral outrigger housings and front/rear towing and tie down lugs.

Outrigger System
Hydraulic single-stage, double box beam outriggers with front stabilizer and inverted jack design; equipped with integral holding valves. Three positions with fully extended, intermediate (50%) extended and fully retracted settings. Steel fabricated, outrigger pads, 24 in. (610 mm) round. An aluminum, permanently stowed, front center stabilizer pad. Optional aluminum outrigger pads available in place of steel. Maximum outrigger pad load; 72,000 lbs. (32 659 kg)

Outrigger Controls
Located in the superstructure cab and on the left side (umbilical design), requires two hand operation. Crane level indicator (sight bubble) on right side console. Carrier mounted controls located on each side of the carrier for initial setup.

Engine
Cummins ISC300, six cylinder, turbocharged and after cooled diesel, 506 cu. in. (8.3L) 300 bhp (224 kW) @ 2,000 RPM. Maximum torque: 860 ft. lb. (1166 Nm) @ 1,600 RPM.

Transmission
Allison automatic with 6 speeds forward and 1 reverse.

Fuel Tank Capacity
60 gallons (227 L).

Electrical System
Two 12 V low maintenance batteries. 12 V system with 12 V headlights. Battery disconnect in battery box compartment.

Drive
6 x 4 x 2.

Steering
Front axles, mechanical with hydraulic power assist controlled by steering wheel.

Axles
Front: (1) beam-type steering axle, 82.7 in. (2.10 m) track. Capacity: 21,000 lbs. (9 526 kg)
Rear: (2) single reduction drive, 72.3 in. (1.84 m) track. Inter-axle differential lock. Capacity: 41,000 lbs. (18 598 kg)

Brakes
S-cam, dual line air system operating on all wheels. Spring-applied, air released parking brake acting on rear axles. Air dryer standard.

Tires
Standard Front: 425/65R 22.5 radial highway treat tubeless singles.
Standard Rear: 11R22.5 highway tread tube type duals.

Suspension
Front: Spring mounted single axle with shock absorbers.
Rear: Air bag suspension with shock absorbers.

Lights
Full carrier lighting package including front and rear turn indicators, headlights and LED tail lights, brake and hazard warning lights.

Cab
One man design, galvannealed steel fabricated with acoustical lining and tinted safety glass throughout. Deluxe fabric covered, fully air adjustable seat with armrests. Complete driving controls and engine instrumentation including tilt telescope steering wheel, tachometer, speedometer, voltmeter, water temp., oil pressure, fuel level, dual air pressure gauges with A/V warning, engine high temp./low coolant A/V warning. Other standard items include: hot water heater/defroster, electric variable speed windshield washer and wiper, fire extinguisher, cab circulating fan, seat belt, door and window locks, and a 12V power outlet for cell phone or fax machine.

Maximum Speed
65 MPH (105 kph)

Gradeability (Theoretical)
32% (Based on 52,000 lbs. [23 587 kg] GVW)

Miscellaneous Standard Equipment
Full length aluminum fenders, rear view mirrors, electronic back-up alarm, sling/tool box, electric controlled pump disconnect, auxiliary air supply, battery disconnect, air cleaner restriction indicator, block and ball stowage, aluminum front/rear wheels (outer rear only).

**Denotes optional equipment*

Courtesy of Crane.Market

dimensions

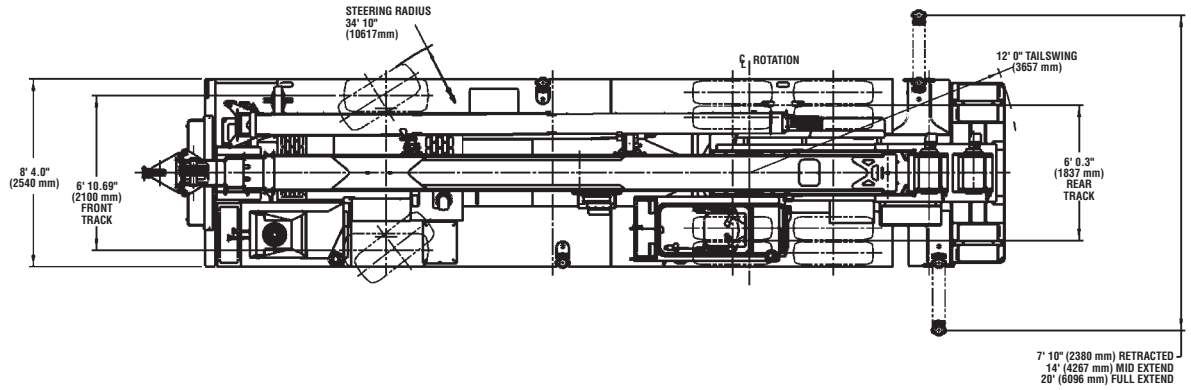

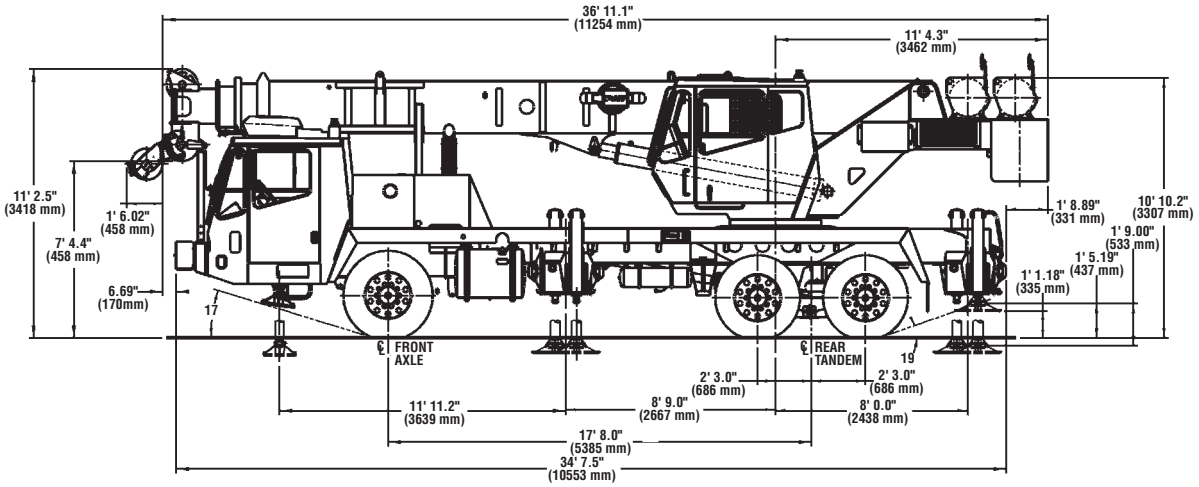

Weights

	Gross		Front Axle		Rear Axles	
Axle Allowable	62,000	(28 123)	21,000	(9 525)	41,000	(18 598)
Unit Configuration lb. (kg.)						
Basic machine including 95 ft. main boom, main hoist with cable, Cummins/Allison drivetrain, driver and light counterweight package.	48,034	(21 788)	17,097	(7 755)	30,937	(14 033)
Additions:						
Standard counterweight package (includes IPO)	1,812	(822)	-883	(-401)	2,695	(1 222)
Heavy counterweight package (includes IPO)	7,972	(3 616)	-1,035	(-470)	9,007	(4 086)
25 ton (22 mt) hookblock (front stowage)	550	(250)	755	(342)	-205	(-93)
7.5 ton (6.8 mt)headache ball (front stowage)	369	(167)	508	(230)	-139	(-63)
7.5 ton (6.8)headache ball (rear stowage, includes mount)	394	(178)	-175	(-79)	569	(258)
Swingaway carrier brackets	85	(39)	40	(18)	45	(20)
26 ft. (7.9 m) swingaway	1,300	(590)	1,006	(456)	294	(133)
26 - 45 ft. (7.9 - 13.7 m) telescoping swingaway	1,790	(812)	1,351	(613)	439	(199)
Auxiliary boom nose	114	(52)	165	(75)	-51	(-23)
Auxiliary hoist with rope	339	(154)	-163	(-74)	502	(228)
Air conditioning superstructure cab	205	(93)	-47	(-21)	252	(114)
Air conditioning chassis cab	81	(37)	94	(43)	-13	(-6)

Courtesy of Crane.Market

counterweight configurations

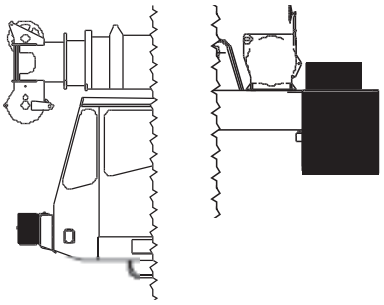

Heavy:

Superstructure 7000 lb. + 1460 lb. Front Bumper with Aux. Hoist or in place of (IPO).

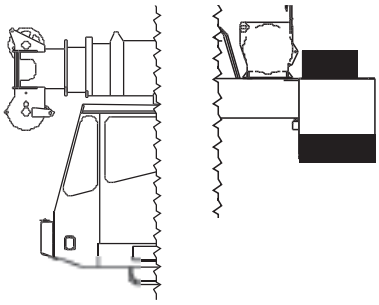

Standard:

Superstructure 2300 lb. with Aux. Hoist or in place of (IPO).

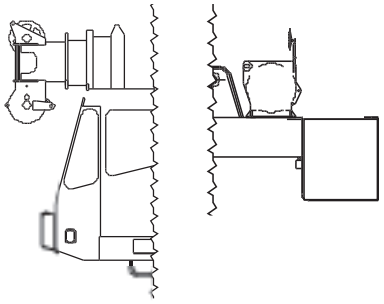

Light:

Superstructure Shell 1250 lb. + No Front Bumper without Aux. Hoist or in place of (IPO).

Load Chart Configuration

Counterweight	Heavy Counterweight	Standard Counterweight	Light Counterweight
Main Boom	✖ ■ ● □	✖ ■ ● □	✖ ■ ● □
26 ft. Swingaway	✖ ■	✖ ■	✖ ■
26-45 ft. Swingaway	✖ ■	✖ ■	✖ ■

Outrigger Span	20 ft. = ✖	14 ft. = ■	7.8 ft. = ●
Rubber	P&C = □		

Courtesy of Crane.Market

working range

29-95' main boom + 26-45' lattice extension

(Boom Deflection Not Shown)

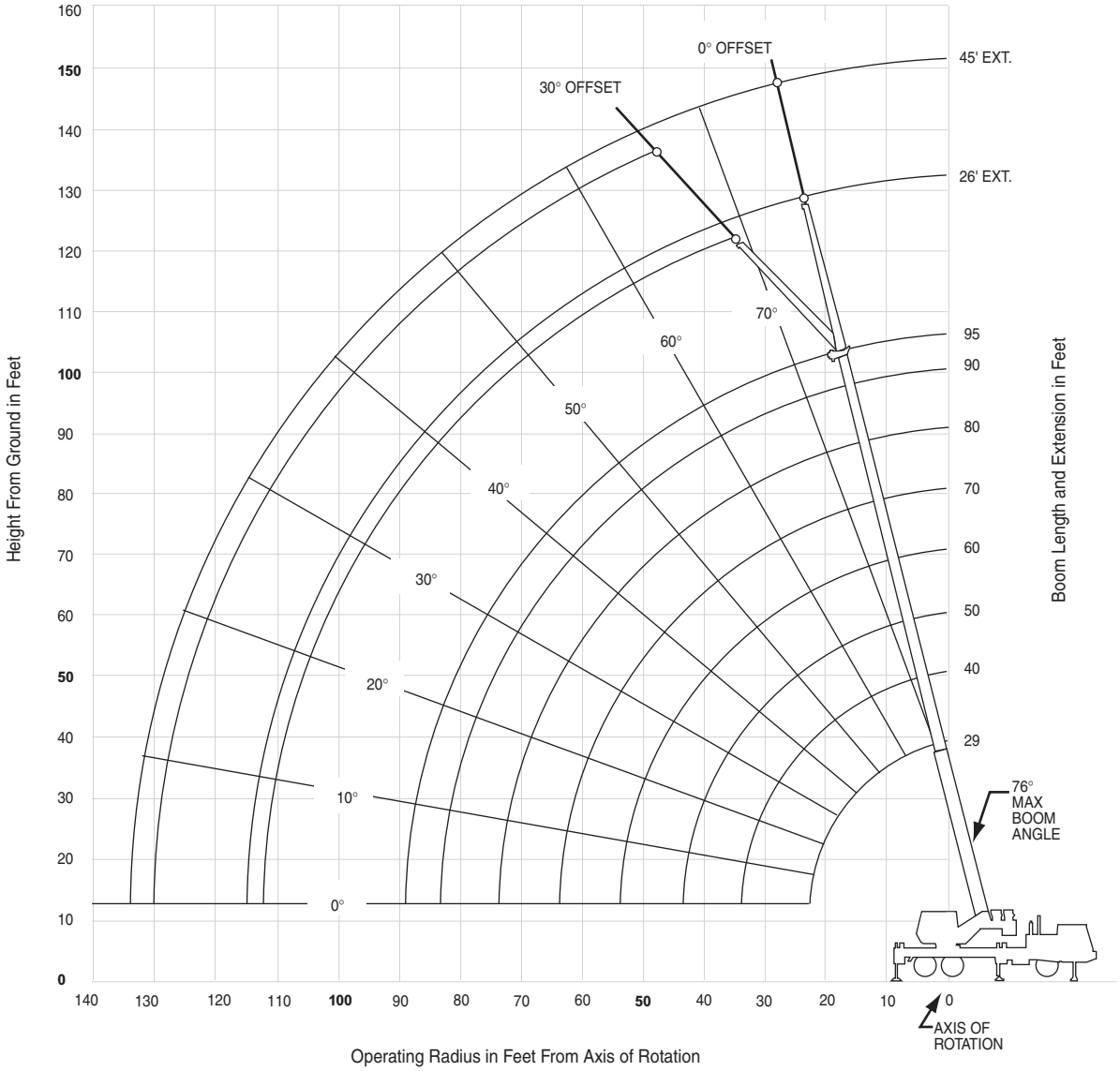

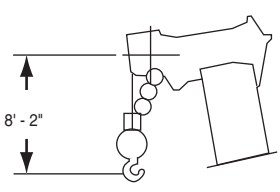

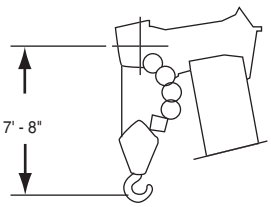

Dimensions are for largest Grove furnished hook block and headache ball, with anti-two block activated.

THIS CHART IS ONLY A GUIDE AND SHOULD NOT BE USED TO OPERATE THE CRANE. The individual crane's load chart, operating instructions and other instructional plates must be read and understood prior to operating the crane.

GROVE

Courtesy of Crane.Market

load charts

8

29 - 95 ft. | 8,460 lbs | 100% 20' 0" | 360º

Pounds

Main Boom Length in Feet

Feet	29	40	50	60	70	80	90	95
9	80,000 (63)							
10	60,850 (61)	50,100 (69.5)	46,950 (74.5)					
12	55,050 (56)	50,100 (66.5)	44,950 (72)	38,850 (75.5)				
15	46,300 (48)	45,050 (61.5)	41,050 (68)	36,000 (72.5)	29,450 (75)	*22,450 (76)		
20	32,750 (30)	31,900 (52.5)	34,100 (61.5)	29,500 (67)	27,400 (71)	22,450 (73.5)	*18,550 (76)	*15,500 (76)
25		24,000 (42.5)	25,800 (54.5)	24,800 (61.5)	23,100 (66.5)	19,250 (70)	16,500 (72.5)	15,300 (74)
30		18,800 (29)	20,300 (47)	20,600 (56)	19,600 (61.5)	16,850 (66)	14,400 (69)	13,200 (70.5)
35			15,550 (38)	15,850 (49.5)	16,000 (57)	14,850 (62)	12,700 (65.5)	11,500 (67.5)
40			12,800 (26)	13,050 (42.5)	13,200 (51.5)	13,250 (57.5)	11,000 (62)	10,000 (64)
45				10,900 (34.5)	10,900 (46)	10,900 (53)	9,630 (58)	9,060 (60.5)
50				8,990 (23.5)	9,020 (39.5)	9,030 (48)	8,740 (54.5)	7,990 (57)
55					7,550 (32)	7,560 (43)	7,670 (50)	7,100 (53)
60					6,350 (22)	6,380 (37)	6,470 (45.5)	6,320 (49)
65						5,410 (30)	5,490 (40.5)	5,530 (44.5)
70						4,580 (20.5)	4,670 (35)	4,700 (40)
75							3,970 (28.5)	4,000 (34.5)
80							3,360 (19.5)	3,400 (28)
85								2,860 (19.5)
Minimum boom angle (º) for indicated length (no load)								0
Maximum boom length (ft.) at 0º boom angle (no load)								95

NOTE: ( ) Boom angles are in degrees.
*This capacity is based on maximum boom angle.

Lifting Capacities at Zero Degree Boom Angle

Boom Angle	Main Boom Length in Feet 29	40	50	60	70	80	90	95
0º	26,150 (22.8)	15,850 (33.8)	11,000 (43.8)	7,790 (53.8)	5,570 (63.8)	4,030 (73.8)	2,940 (83.8)	2,480 (89)

NOTE: ( ) Reference radii in feet.

A6-829-102810

29 - 95 ft. | 8,460 lbs | 100% 20' 0" | Over Rear

Pounds

Main Boom Length in Feet

Feet	29	40	50	60	70	80	90	95
9	80,000 (63)							
10	60,850 (61)	50,100 (69.5)	46,950 (74.5)					
12	55,050 (56)	50,100 (66.5)	44,950 (72)	38,850 (75.5)				
15	46,300 (48)	45,050 (61.5)	41,050 (68)	36,000 (72.5)	29,450 (75)	*22,450 (76)		
20	32,750 (30)	31,900 (52.5)	34,100 (61.5)	29,500 (67)	27,400 (71)	22,450 (73.5)	*18,550 (76)	*15,500 (76)
25		24,000 (42.5)	25,800 (54.5)	24,800 (61.5)	23,100 (66.5)	19,250 (70)	16,500 (72.5)	15,300 (74)
30		18,800 (29)	20,300 (47)	20,600 (56)	19,600 (61.5)	16,850 (66)	14,400 (69)	13,200 (70.5)
35			15,550 (38)	15,850 (49.5)	16,000 (57)	14,850 (62)	12,700 (65.5)	11,500 (67.5)
40			12,800 (26)	13,050 (42.5)	13,200 (51.5)	13,250 (57.5)	11,000 (62)	10,000 (64)
45				10,900 (34.5)	11,100 (46)	11,200 (53)	9,630 (58)	9,060 (60.5)
50				9,240 (23.5)	9,410 (39.5)	9,530 (48)	8,740 (54.5)	7,990 (57)
55					8,030 (32)	8,150 (43)	7,760 (50)	7,100 (53)
60					6,870 (22)	7,000 (37)	6,920 (45.5)	6,320 (49)
65						6,020 (30)	6,110 (40.5)	5,650 (44.5)
70						5,190 (20.5)	5,280 (35)	5,080 (40)
75							4,560 (28.5)	4,570 (34.5)
80							3,930 (19.5)	3,960 (28)
85								3,410 (19.5)
Minimum boom angle (º) for indicated length (no load)								0
Maximum boom length (ft.) at 0º boom angle (no load)								95

NOTE: ( ) Boom angles are in degrees.
*This capacity is based on maximum boom angle.

Lifting Capacities at Zero Degree Boom Angle

Boom Angle	Main Boom Length in Feet 29	40	50	60	70	80	90	95
0º	26,150 (22.8)	15,850 (33.8)	11,100 (43.8)	8,140 (53.8)	6,100 (63.8)	4,620 (73.8)	3,490 (83.8)	3,000 (89)

NOTE: ( ) Reference radii in feet.

A6-829-102811

TMS500E

GROVE

THIS CHART IS ONLY A GUIDE AND SHOULD NOT BE USED TO OPERATE THE CRANE. The individual crane's load chart, operating instructions and other instructional plates must be read and understood prior to operating the crane.

Courtesy of Crane.Market

load charts

29 - 95 ft.	26 - 45 ft.	8,460 lbs	100% 20' 0"	360°

Pounds

Feet	26 ft. LENGTH		45 ft. LENGTH	
	0° OFFSET	30° OFFSET	0° OFFSET	30° OFFSET
30	*8,200 (76)			
35	8,200 (73.5)		*5,250 (76)	
40	8,200 (71)	*5,780 (76)	5,250 (75)	
45	8,120 (68.5)	5,780 (73.5)	4,940 (73)	
50	7,350 (66)	5,360 (71)	4,540 (71)	
55	6,370 (63.5)	4,750 (68)	4,150 (68.5)	*2,730 (76)
60	5,670 (60.5)	4,290 (65)	3,890 (66.5)	2,730 (74.5)
65	4,820 (57.5)	3,870 (62)	3,740 (64)	2,730 (72)
70	4,200 (54.5)	3,530 (59)	3,600 (61.5)	2,580 (69.5)
75	3,680 (51.5)	3,230 (56)	3,470 (59)	2,520 (67)
80	3,080 (48.5)	3,000 (52.5)	3,240 (56.5)	2,460 (64)
85	2,520 (45)	2,780 (49)	3,050 (54)	2,420 (61.5)
90	2,050 (41)	2,500 (45)	2,820 (51)	2,390 (58.5)
95	1,670 (37)	2,070 (40.5)	2,520 (48)	2,370 (55.5)
100	1,370 (32.5)	1,650 (35.5)	2,170 (45)	2,310 (52)
105	1,020 (27)		1,860 (42)	2,000 (48.5)
110			1,550 (38.5)	1,580 (45)
115			1,230 (34.5)	1,260 (40.5)
120				1,000 (35.5)
Min. boom angle for indicated length (no load)	20°	30°	31°	30°
Max. boom length at 0° boom angle (no load)	90 ft.		80 ft.	

NOTE: ( ) Boom angles are in degrees. A6-829-101542

*This capacity based on maximum boom angle.

NOTES:

1. All capacities above the bold line are based on structural strength of boom extension.
2. 26 ft. and 45 ft. boom extension lengths may be used for single line lifting service.
3. Radii listed are for a fully extended boom with the boom extension erected. For main boom lengths less than fully extended, the rated loads are determined by boom angle. Use only the column which corresponds to the boom extension length and offset for which the machine is configured. For boom angles not shown, use the rating of the next lower boom angle.
4. **WARNING:** Operation of this machine with heavier loads than the capacities listed is strictly prohibited. Machine tipping with boom extension occurs rapidly and without advance warning.
5. Boom angle is the angle above or below horizontal of the longitudinal axis of the boom base section after lifting rated load.
6. Capacities listed are with outriggers properly extended and vertical jacks set only.

THIS CHART IS ONLY A GUIDE AND SHOULD NOT BE USED TO OPERATE THE CRANE. The individual crane's load chart, operating instructions and other instructional plates must be read and understood prior to operating the crane.

GROVE

Courtesy of Crane.Market

load charts

10

29 - 95 ft.	26 - 45 ft.	8,460 lbs	100% 20' 0"	Over Rear

Pounds

Feet	26 ft. LENGTH		45 ft. LENGTH	
	0° OFFSET	30° OFFSET	0° OFFSET	30° OFFSET
30	*8,200 (76)			
35	8,200 (73.5)		*5,250 (76)	
40	8,200 (71)	*5,780 (76)	5,250 (75)	
45	8,120 (68.5)	5,780 (73.5)	4,940 (73)	
50	7,350 (66)	5,360 (71)	4,540 (71)	
55	6,370 (63.5)	4,750 (68)	4,150 (68.5)	*2,730 (76)
60	5,670 (60.5)	4,290 (65)	3,890 (66.5)	2,730 (74.5)
65	4,820 (57.5)	3,870 (62)	3,740 (64)	2,730 (72)
70	4,200 (54.5)	3,530 (59)	3,600 (61.5)	2,580 (69.5)
75	3,680 (51.5)	3,230 (56)	3,470 (59)	2,520 (67)
80	3,080 (48.5)	3,000 (52.5)	3,240 (56.5)	2,460 (64)
85	2,520 (45)	2,780 (49)	3,050 (54)	2,420 (61.5)
90	2,050 (41)	2,500 (45)	2,820 (51)	2,390 (58.5)
95	1,670 (37)	2,100 (40.5)	2,520 (48)	2,370 (55.5)
100	1,370 (32.5)	1,650 (35.5)	2,170 (45)	2,310 (52)
105	1,020 (27)		1,860 (42)	2,000 (48.5)
110			1,550 (38.5)	1,580 (45)
115			1,230 (34.5)	1,260 (40.5)
120				1,000 (35.5)
Min. boom angle for indicated length (no load)	20°	30°	31°	30°
Max. boom length at 0° boom angle (no load)	90 ft.		80 ft.	

NOTE: ( ) Boom angles are in degrees. A6-829-101564
*This capacity based on maximum boom angle.

NOTES:

1. All capacities above the bold line are based on structural strength of boom extension.
2. 26 ft. and 45 ft. boom extension lengths may be used for single line lifting service.
3. Radii listed are for a fully extended boom with the boom extension erected. For main boom lengths less than fully extended, the rated loads are determined by boom angle. Use only the column which corresponds to the boom extension length and offset for which the machine is configured. For boom angles not shown, use the rating of the next lower boom angle.
4. **WARNING:** Operation of this machine with heavier loads than the capacities listed is strictly prohibited. Machine tipping with boom extension occurs rapidly and without advance warning.
5. Boom angle is the angle above or below horizontal of the longitudinal axis of the boom base section after lifting rated load.
6. Capacities listed are with outriggers properly extended and vertical jacks set only.

GROVE

THIS CHART IS ONLY A GUIDE AND SHOULD NOT BE USED TO OPERATE THE CRANE. The individual crane's load chart, operating instructions and other instructional plates must be read and understood prior to operating the crane.

Courtesy of Crane.Market

29 - 95 ft. | 2,300 lbs | 100% 20' 0" | 360°

Pounds

Feet	Main Boom Length in Feet							
	29	40	50	60	70	80	90	95
9	80,000 (63)							
10	60,850 (61)	50,100 (69.5)	46,950 (74.5)					
12	53,500 (56)	50,100 (66.5)	44,950 (72)	38,850 (75.5)				
15	40,750 (48)	41,650 (61.5)	41,050 (68)	36,000 (72.5)	29,450 (75)	*22,450 (76)		
20	28,300 (30)	29,200 (52.5)	29,650 (61.5)	29,500 (67)	27,400 (71)	22,450 (73.5)	*18,550 (76)	*15,500 (76)
25		21,900 (42.5)	22,300 (54.5)	22,550 (61.5)	22,750 (66.5)	19,250 (70)	16,500 (72.5)	15,300 (74)
30		17,000 (29)	17,150 (47)	17,350 (56)	17,500 (61.5)	16,850 (66)	14,400 (69)	13,200 (70.5)
35			12,950 (38)	13,050 (49.5)	13,150 (57)	13,250 (62)	12,700 (65.5)	11,500 (67.5)
40			10,150 (26)	10,200 (42.5)	10,300 (51.5)	10,350 (57.5)	10,400 (62)	10,000 (64)
45				8,200 (34.5)	8,230 (46)	8,270 (53)	8,310 (58)	8,330 (60.5)
50				6,650 (23.5)	6,690 (39.5)	6,710 (48)	6,750 (54.5)	6,770 (57)
55					5,490 (32)	5,490 (43)	5,530 (50)	5,550 (53)
60					4,500 (22)	4,520 (37)	4,550 (45.5)	4,570 (49)
65						3,720 (30)	3,760 (40.5)	3,780 (44.5)
70						3,030 (20.5)	3,090 (35)	3,110 (40)
75							2,530 (28.5)	2,550 (34.5)
80							2,020 (19.5)	2,060 (28)
85								1,630 (19.5)
Minimum boom angle (°) for indicated length (no load)								0
Maximum boom length (ft.) at 0° boom angle (no load)								95

NOTE: ( ) Boom angles are in degrees.
*This capacity is based on maximum boom angle.

Lifting Capacities at Zero Degree Boom Angle

Boom Angle	Main Boom Length in Feet							
	29	40	50	60	70	80	90	95
0°	23,800 (22.8)	13,600 (33.8)	8,520 (43.8)	5,680 (53.8)	3,860 (63.8)	2,570 (73.8)	1,680 (83.8)	1,320 (89)

NOTE: ( ) Reference radii in feet.

A6-829-102812

TMS500E

THIS CHART IS ONLY A GUIDE AND SHOULD NOT BE USED TO OPERATE THE CRANE. The individual crane's load chart, operating instructions and other instructional plates must be read and understood prior to operating the crane.

Courtesy of Crane.Market

load charts

12

29 - 95 ft.	2,300 lbs	100% 20' 0"	Over Rear

Pounds

Main Boom Length in Feet

Feet	29	40	50	60	70	80	90	95
9	80,000 (63)							
10	60,850 (61)	50,100 (69.5)	46,950 (74.5)					
12	53,500 (56)	50,100 (66.5)	44,950 (72)	38,850 (75.5)				
15	40,750 (48)	41,650 (61.5)	41,050 (68)	36,000 (72.5)	29,450 (75)	*22,450 (76)		
20	28,300 (30)	29,200 (52.5)	29,650 (61.5)	29,500 (67)	27,400 (71)	22,450 (73.5)	*18,550 (76)	*15,500 (76)
25		21,900 (42.5)	22,300 (54.5)	22,550 (61.5)	22,750 (66.5)	19,250 (70)	16,500 (72.5)	15,300 (74)
30		17,050 (29)	17,450 (47)	17,700 (56)	17,900 (61.5)	16,850 (66)	14,400 (69)	13,200 (70.5)
35			14,050 (38)	14,300 (49.5)	14,450 (57)	14,600 (62)	12,700 (65.5)	11,500 (67.5)
40			11,400 (26)	11,550 (42.5)	11,600 (51.5)	11,700 (57.5)	11,000 (62)	10,000 (64)
45				9,370 (34.5)	9,480 (46)	9,550 (53)	9,630 (58)	9,060 (60.5)
50				7,690 (23.5)	7,830 (39.5)	7,890 (48)	8,030 (54.5)	7,990 (57)
55					6,490 (32)	6,580 (43)	6,690 (50)	6,740 (53)
60					5,410 (22)	5,510 (37)	5,610 (45.5)	5,650 (49)
65						4,610 (30)	4,710 (40.5)	4,750 (44.5)
70						3,860 (20.5)	3,940 (35)	3,980 (40)
75							3,280 (28.5)	3,320 (34.5)
80							2,720 (19.5)	2,740 (28)
85								2,250 (19.5)
Minimum boom angle (°) for indicated length (no load)								0
Maximum boom length (ft.) at 0° boom angle (no load)								95

NOTE: ( ) Boom angles are in degrees.

*This capacity is based on maximum boom angle.

Lifting Capacities at Zero Degree Boom Angle

Main Boom Length in Feet

Boom Angle	29	40	50	60	70	80	90	95
0°	23,800 (22.8)	14,300 (33.8)	9,710 (43.8)	6,650 (53.8)	4,720 (63.8)	3,360 (73.8)	2,340 (83.8)	1,890 (89)

NOTE: ( ) Reference radii in feet.

A6-829-102813

TMS500E

GROVE

THIS CHART IS ONLY A GUIDE AND SHOULD NOT BE USED TO OPERATE THE CRANE. The individual crane's load chart, operating instructions and other instructional plates must be read and understood prior to operating the crane.

Courtesy of Crane.Market

Pounds

Feet	26 ft. LENGTH		45 ft. LENGTH	
	0º OFFSET	30º OFFSET	0º OFFSET	30º OFFSET
30	*8,200 (76)			
35	8,200 (73.5)		*5,250 (76)	
40	8,200 (71)	*5,780 (76)	5,250 (75)	
45	8,120 (68.5)	5,780 (73.5)	4,940 (73)	
50	6,980 (66)	5,360 (71)	4,540 (71)	
55	5,680 (63.5)	4,750 (68)	4,150 (68.5)	*2,730 (76)
60	4,640 (60.5)	4,290 (65)	3,890 (66.5)	2,730 (74.5)
65	3,780 (57.5)	3,870 (62)	3,740 (64)	2,730 (72)
70	3,070 (54.5)	3,530 (59)	3,600 (61.5)	2,580 (69.5)
75	2,470 (51.5)	2,930 (56)	3,210 (59)	2,520 (67)
80	1,950 (48.5)	2,330 (52.5)	2,680 (56.5)	2,460 (64)
85	1,510 (45)	1,810 (49)	2,220 (54)	2,420 (61.5)
90	1,120 (41)	1,360 (45)	1,820 (51)	2,390 (58.5)
95			1,470 (48)	1,970 (55.5)
100			1,150 (45)	1,570 (52)
105				1,210 (48.5)
Min. boom angle for indicated length (no load)	35º	36º	40º	42º
Max. boom length at 0º boom angle (no load)	70 ft.		70 ft.	

NOTE: ( ) Boom angles are in degrees. A6-829-101543

*This capacity based on maximum boom angle.

NOTES:

1. All capacities above the bold line are based on structural strength of boom extension.
2. 26 ft. and 45 ft. boom extension lengths may be used for single line lifting service.
3. Radii listed are for a fully extended boom with the boom extension erected. For main boom lengths less than fully extended, the rated loads are determined by boom angle. Use only the column which corresponds to the boom extension length and offset for which the machine is configured. For boom angles not shown, use the rating of the next lower boom angle.
4. **WARNING**: Operation of this machine with heavier loads than the capacities listed is strictly prohibited. Machine tipping with boom extension occurs rapidly and without advance warning.
5. Boom angle is the angle above or below horizontal of the longitudinal axis of the boom base section after lifting rated load.
6. Capacities listed are with outriggers properly extended and vertical jacks set only.

THIS CHART IS ONLY A GUIDE AND SHOULD NOT BE USED TO OPERATE THE CRANE. The individual crane's load chart, operating instructions and other instructional plates must be read and understood prior to operating the crane.

GROVE

Courtesy of Crane.Market

load charts

26 - 45 ft. | 29 - 95 ft. | 2,300 lbs | 100% 20' - 0" | Over Rear

Pounds

Feet	26 ft. LENGTH 0° OFFSET	26 ft. LENGTH 30° OFFSET	45 ft. LENGTH 0° OFFSET	45 ft. LENGTH 30° OFFSET
30	*8,200 (76)			
35	8,200 (73.5)		*5,250 (76)	
40	8,200 (71)	*5,780 (76)	5,250 (75)	
45	8,120 (68.5)	5,780 (73.5)	4,940 (73)	
50	7,350 (66)	5,360 (71)	4,540 (71)	
55	6,370 (63.5)	4,750 (68)	4,150 (68.5)	*2,730 (76)
60	5,670 (60.5)	4,290 (65)	3,890 (66.5)	2,730 (74.5)
65	4,760 (57.5)	3,870 (62)	3,740 (64)	2,730 (72)
70	3,970 (54.5)	3,530 (59)	3,600 (61.5)	2,580 (69.5)
75	3,310 (51.5)	3,230 (56)	3,470 (59)	2,520 (67)
80	2,730 (48.5)	3,000 (52.5)	3,240 (56.5)	2,460 (64)
85	2,230 (45)	2,530 (49)	3,030 (54)	2,420 (61.5)
90	1,790 (41)	2,030 (45)	2,560 (51)	2,390 (58.5)
95	1,400 (37)	1,590 (40.5)	2,150 (48)	2,370 (55.5)
100	1,060 (32.5)	1,200 (35.5)	1,790 (45)	2,300 (52)
105			1,460 (42)	1,880 (48.5)
110			1,170 (38.5)	1,500 (45)
115				1,160 (40.5)
Min. boom angle for indicated length (no load)	27°	30°	34°	34°
Max. boom length at 0° boom angle (no load)	80 ft.		70 ft.	

NOTE: ( ) Boom angles are in degrees. A6-829-101565
*This capacity based on maximum boom angle.

NOTES:

1. All capacities above the bold line are based on structural strength of boom extension.
2. 26 ft. and 45 ft. boom extension lengths may be used for single line lifting service.
3. Radii listed are for a fully extended boom with the boom extension erected. For main boom lengths less than fully extended, the rated loads are determined by boom angle. Use only the column which corresponds to the boom extension length and offset for which the machine is configured. For boom angles not shown, use the rating of the next lower boom angle.
4. WARNING: Operation of this machine with heavier loads than the capacities listed is strictly prohibited. Machine tipping with boom extension occurs rapidly and without advance warning.
5. Boom angle is the angle above or below horizontal of the longitudinal axis of the boom base section after lifting rated load.
6. Capacities listed are with outriggers properly extended and vertical jacks set only.

GROVE

THIS CHART IS ONLY A GUIDE AND SHOULD NOT BE USED TO OPERATE THE CRANE. The individual crane's load chart, operating instructions and other instructional plates must be read and understood prior to operating the crane.

Courtesy of Crane.Market

29 - 95 ft.

1,250 lbs

100%
20' 0"

360˚

Feet

Pounds

Main Boom Length in Feet

Feet	29	40	50	60	70	80	90	95
9	72,450 (63)							
10	60,850 (61)	50,100 (69.5)	46,950 (74.5)					
12	51,250 (56)	50,100 (66.5)	44,950 (72)	38,850 (75.5)				
15	39,000 (48)	40,000 (61.5)	40,350 (68)	36,000 (72.5)	29,450 (75)	*22,450 (76)		
20	27,000 (30)	27,900 (52.5)	28,300 (61.5)	28,700 (67)	27,400 (71)	22,450 (73.5)	*18,550 (76)	*15,500 (76)
25		20,900 (42.5)	21,400 (54.5)	21,550 (61.5)	22,050 (66.5)	19,250 (70)	16,500 (72.5)	15,300 (74)
30		15,150 (29)	15,200 (47)	15,250 (56)	15,550 (61.5)	15,850 (66)	14,400 (69)	13,200 (70.5)
35			11,500 (38)	11,450 (49.5)	11,650 (57)	11,850 (62)	11,850 (65.5)	11,500 (67.5)
40			9,010 (26)	8,970 (42.5)	9,080 (51.5)	9,190 (57.5)	9,210 (62)	9,220 (64)
45				7,170 (34.5)	7,230 (46)	7,280 (53)	7,300 (58)	7,320 (60.5)
50				5,800 (23.5)	5,830 (39.5)	5,840 (48)	5,870 (54.5)	5,880 (57)
55					4,750 (32)	4,730 (43)	4,760 (50)	4,770 (53)
60					3,860 (22)	3,840 (37)	3,870 (45.5)	3,880 (49)
65						3,110 (30)	3,140 (40.5)	3,150 (44.5)
70						2,470 (20.5)	2,530 (35)	2,550 (40)
75							2,010 (28.5)	2,030 (34.5)
80							1,550 (19.5)	1,590 (28)
85								1,190 (19.5)
Minimum boom angle (°) for indicated length (no load)								0
Maximum boom length (ft.) at 0° boom angle (no load)								95

NOTE: ( ) Boom angles are in degrees.
*This capacity is based on maximum boom angle.

Lifting Capacities at Zero Degree Boom Angle

Boom Angle	Main Boom Length in Feet 29	40	50	60	70	80	90
0°	22,650 (22.8)	12,100 (33.8)	7,540 (43.8)	4,940 (53.8)	3,280 (63.8)	2,050 (73.8)	1,240 (83.8)

NOTE: ( ) Reference radii in feet.

A6-829-101535A

TMS500E

THIS CHART IS ONLY A GUIDE AND SHOULD NOT BE USED TO OPERATE THE CRANE. The individual crane's load chart, operating instructions and other instructional plates must be read and understood prior to operating the crane.

GROVE

Courtesy of Crane.Market

load charts

29 - 95 ft.	1,250 lbs	100% 20' 0"	Over Rear

Pounds

Feet	Main Boom Length in Feet 29	40	50	60	70	80	90	95
9	72,450 (63)							
10	60,850 (61)	50,100 (69.5)	46,950 (74.5)					
12	51,250 (56)	50,100 (66.5)	44,950 (72)	38,850 (75.5)				
15	39,000 (48)	40,000 (61.5)	40,350 (68)	36,000 (72.5)	29,450 (75)	*22,450 (76)		
20	27,000 (30)	27,900 (52.5)	28,300 (61.5)	28,700 (67)	27,400 (71)	22,450 (73.5)	*18,550 (76)	*15,500 (76)
25		20,900 (42.5)	21,500 (54.5)	21,800 (61.5)	22,100 (66.5)	19,250 (70)	16,500 (72.5)	15,300 (74)
30		16,300 (29)	16,900 (47)	17,100 (56)	17,250 (61.5)	16,850 (66)	14,400 (69)	13,200 (70.5)
35			13,100 (38)	13,150 (49.5)	13,250 (57)	13,350 (62)	12,700 (65.5)	11,500 (67.5)
40			10,300 (26)	10,400 (42.5)	10,500 (51.5)	10,550 (57.5)	10,800 (62)	10,000 (64)
45				8,390 (34.5)	8,500 (46)	8,560 (53)	8,740 (58)	8,840 (60.5)
50				6,830 (23.5)	6,960 (39.5)	7,020 (48)	7,160 (54.5)	7,230 (57)
55					5,720 (32)	5,810 (43)	5,910 (50)	5,970 (53)
60					4,710 (22)	4,810 (37)	4,910 (45.5)	4,950 (49)
65						3,970 (30)	4,070 (40.5)	4,110 (44.5)
70						3,270 (20.5)	3,350 (35)	3,390 (40)
75							2,740 (28.5)	2,770 (34.5)
80							2,210 (19.5)	2,240 (28)
85								1,770 (19.5)
Minimum boom angle (°) for indicated length (no load)								0
Maximum boom length (ft.) at 0° boom angle (no load)								95

NOTE: ( ) Boom angles are in degrees.
*This capacity is based on maximum boom angle.

Lifting Capacities at Zero Degree Boom Angle

Boom Angle	Main Boom Length in Feet 29	40	50	60	70	80	90	95
0°	22,650 (22.8)	13,550 (33.8)	8,690 (43.8)	5,860 (53.8)	4,060 (63.8)	2,800 (73.8)	1,860 (83.8)	1,440 (89)

A6-829-101563A

NOTE: ( ) Reference radii in feet.

TMS500E

GROVE

THIS CHART IS ONLY A GUIDE AND SHOULD NOT BE USED TO OPERATE THE CRANE. The individual crane's load chart, operating instructions and other instructional plates must be read and understood prior to operating the crane.

Courtesy of Crane.Market

load charts

29 - 95 ft.	26 - 45 ft.	1,250 lbs	100% 20' 0"	360°

Pounds

Feet	26 ft. LENGTH		45 ft. LENGTH	
	0° OFFSET	30° OFFSET	0° OFFSET	30° OFFSET
30	*8,200 (76)			
35	8,200 (73.5)		*5,250 (76)	
40	8,200 (71)	*5,780 (76)	5,250 (75)	
45	7,660 (68.5)	5,780 (73.5)	4,940 (73)	
50	6,110 (66)	5,360 (71)	4,540 (71)	
55	4,910 (63.5)	4,750 (68)	4,150 (68.5)	*2,730 (76)
60	3,940 (60.5)	4,290 (65)	3,890 (66.5)	2,730 (74.5)
65	3,150 (57.5)	3,830 (62)	3,740 (64)	2,730 (72)
70	2,500 (54.5)	3,060 (59)	3,260 (61.5)	2,580 (69.5)
75	1,940 (51.5)	2,400 (56)	2,680 (59)	2,520 (67)
80	1,470 (48.5)	1,840 (52.5)	2,190 (56.5)	2,460 (64)
85	1,050 (45)	1,350 (49)	1,770 (54)	2,420 (61.5)
90			1,400 (51)	2,000 (58.5)
95			1,070 (48)	1,570 (55.5)
100				1,200 (52)
Min. boom angle for indicated length (no load)	43°	45°	46°	49°
Max. boom length at 0° boom angle (no load)	60 ft.		60 ft.	

NOTE: ( ) Boom angles are in degrees. A6-829-101544
*This capacity based on maximum boom angle.

NOTES:

1. All capacities above the bold line are based on structural strength of boom extension.
2. 26 ft. and 45 ft. boom extension lengths may be used for single line lifting service.
3. Radii listed are for a fully extended boom with the boom extension erected. For main boom lengths less than fully extended, the rated loads are determined by boom angle. Use only the column which corresponds to the boom extension length and offset for which the machine is configured. For boom angles not shown, use the rating of the next lower boom angle.
4. **WARNING**: Operation of this machine with heavier loads than the capacities listed is strictly prohibited. Machine tipping with boom extension occurs rapidly and without advance warning.
5. Boom angle is the angle above or below horizontal of the longitudinal axis of the boom base section after lifting rated load.
6. Capacities listed are with outriggers properly extended and vertical jacks set only.

THIS CHART IS ONLY A GUIDE AND SHOULD NOT BE USED TO OPERATE THE CRANE. The individual crane's load chart, operating instructions and other instructional plates must be read and understood prior to operating the crane.

GROVE

Courtesy of Crane.Market

load charts

29 - 95 ft.	26 - 45 ft.	1,250 lbs	100% 20' 0"	Over Rear

Pounds

Feet	26 ft. LENGTH 0° OFFSET	26 ft. LENGTH 30° OFFSET	45 ft. LENGTH 0° OFFSET	45 ft. LENGTH 30° OFFSET
30	*8,200 (76)			
35	8,200 (73.5)		*5,250 (76)	
40	8,200 (71)	*5,780 (76)	5,250 (75)	
45	8,120 (68.5)	5,780 (73.5)	4,940 (73)	
50	7,350 (66)	5,360 (71)	4,540 (71)	
55	6,060 (63.5)	4,750 (68)	4,150 (68.5)	*2,730 (76)
60	5,000 (60.5)	4,290 (65)	3,890 (66.5)	2,730 (74.5)
65	4,120 (57.5)	3,870 (62)	3,740 (64)	2,730 (72)
70	3,390 (54.5)	3,530 (59)	3,600 (61.5)	2,580 (69.5)
75	2,760 (51.5)	3,200 (56)	3,470 (59)	2,520 (67)
80	2,230 (48.5)	2,590 (52.5)	3,050 (56.5)	2,460 (64)
85	1,760 (45)	2,060 (49)	2,550 (54)	2,420 (61.5)
90	1,350 (41)	1,590 (45)	2,120 (51)	2,390 (58.5)
95		1,180 (40.5)	1,740 (48)	2,340 (55.5)
100			1,390 (45)	1,900 (52)
105			1,090 (42)	1,500 (48.5)
110				1,150 (45)
Min. boom angle for indicated length (no load)	38°	36°	40°	43°
Max. boom length at 0° boom angle (no load)	60 ft.		60 ft.	

NOTE: ( ) Boom angles are in degrees.
*This capacity based on maximum boom angle.

A6-829-101566

NOTES:

1. All capacities above the bold line are based on structural strength of boom extension.
2. 26 ft. and 45 ft. boom extension lengths may be used for single line lifting service.
3. Radii listed are for a fully extended boom with the boom extension erected. For main boom lengths less than fully extended, the rated loads are determined by boom angle. Use only the column which corresponds to the boom extension length and offset for which the machine is configured. For boom angles not shown, use the rating of the next lower boom angle.
4. **WARNING**: Operation of this machine with heavier loads than the capacities listed is strictly prohibited. Machine tipping with boom extension occurs rapidly and without advance warning.
5. Boom angle is the angle above or below horizontal of the longitudinal axis of the boom base section after lifting rated load.
6. Capacities listed are with outriggers properly extended and vertical jacks set only.

GROVE

THIS CHART IS ONLY A GUIDE AND SHOULD NOT BE USED TO OPERATE THE CRANE. The individual crane's load chart, operating instructions and other instructional plates must be read and understood prior to operating the crane.

Courtesy of Crane.Market

Weight Reductions for Load Handling Devices

26 ft. Offsettable Boom Extension	
*Erected	3,600 lb.
26 ft. - 45 ft. Tele. Boom Extension	
*Erected (Retracted)	4,800 lb.
*Erected (Extended)	6,800 lb.

*Reduction of main boom capacities

(no deduct required for stowed boom extension)

When lifting over swingaway and/or jib combinations, deduct total weight of all load handling devices reeved over main boom nose directly from swingaway or jib capacity.

Auxiliary Boom Nose	114 lb.

Hookblocks and Headache Balls:	
40 Ton, 4 Sheave	757 lb. +
25 Ton, 3 Sheave	550 lb. +
15 Ton, 3 Sheave	500 lb. +
7.5 Ton Overhaul Ball	345 lb. +

+ Refer to rating plate for actual weight.

NOTE: All load handling devices and boom attachments are considered part of the load and suitable allowances MUST BE MADE for their combined weights. Weights are for Grove furnished equipment.

Line Pulls and Reeving Information

Hoists	Cable Specs.	Permissible Line Pulls	Nominal Cable Length
Main	5/8" (16 mm) 6x37 Class, EIPS, IWRC Special Flexible Min. Breaking Strength 41,200 lb.	11,640 lb.	450 ft.
Main & Aux.	5/8" (16 mm) Flex-X 35 Rotation Resistant (Non-rotating) Min. Breaking Strength 61,200 lb.	11,640 lb.	450 ft.

The approximate weight of 5/8" wire rope is 1.0 lb./ft.

Hoist Performance

Wire Rope Layer	Hoist Line Pulls Available lb.*	Drum Rope Capacity (ft.) Layer	Total
1	11,640	77	77
2	10,480	85	162
3	9,530	94	256
4	8,730	102	358
5	8,060	111	469
6	7,490	119	588

*Max. lifting capacity: 6x37 or 35x7 class = 11,640 lb.

Working Area Diagram

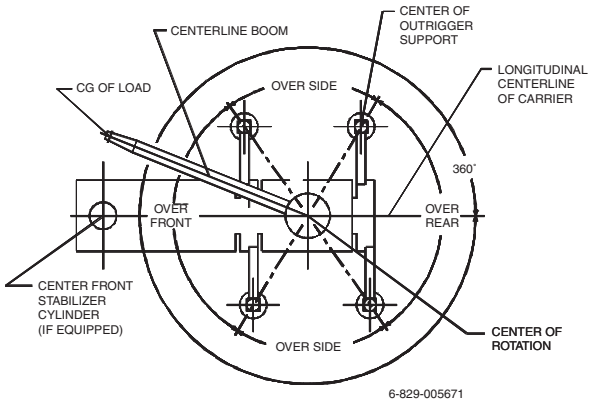

6-829-005671

Bold lines determine the limiting position of any load for operation within working areas indicated.

THIS CHART IS ONLY A GUIDE AND SHOULD NOT BE USED TO OPERATE THE CRANE. The individual crane's load chart, operating instructions and other instructional plates must be read and understood prior to operating the crane.

GROVE

Courtesy of Crane.Market

GROVE®

Manitowoc Crane Group - Americas
Manitowoc, Wisconsin Facility
Tel: [Int + 001] 920 684 6621
Fax: [Int + 001] 920 683 6277
Shady Grove, Pennsylvania Facility
Tel: [Int + 001] 717 597 8121
Fax: [Int + 001] 717 597 4062
Manitowoc Crane Group - EMEA
Europe Middle East & Africa
Tel: [Int + 33] (0) 191 565 6281
Fax: [Int + 33] (0) 4 72 18 20 20
Manitowoc Crane Group - UK
Europe Middle East & Africa
Tel: [Int + 44] (0) 191 565 6281
Fax: [Int + 44] (0) 191 564 0442
Manitowoc Crane Group - Germany
(Sales, Parts & Service)
Tel: [Int + 49](0) 2173 8909 0
Fax: [Int + 49] (0) 2173 8909-30
Manitowoc Crane Group - France
France & Africa (Sales, Parts & Service)
Tel: [Int + 33] (0) 1 303 13150
Fax: [Int + 33] (0) 1 303 86085
Manitowoc Crane Group - Netherlands
(Sales, Parts & Service)
Tel: [Int + 31] (0) 76 578 39 99
Fax: [Int + 31] (0) 76 578 39 78
Manitowoc Crane Group - Italy
Italy & Southern Europe (Sales, Parts & Service)
Tel: [Int + 39] (0) 331 49 33 11
Fax: [Int + 39] (0) 331 49 33 30
Manitowoc Crane Group - Portugal
Portugal & Spain (Sales, Parts & Service)
Tel: [Int + 351] (0) 22 968 08 89
Fax: [Int + 351] (0) 22 968 08 97
Manitowoc Crane Group - Singapore
Asia/Pacific excl China (Sales, Parts & Service)
Tel: [Int + 65] 6861 1733
Fax: [Int + 65] 6862 4040 / 4142
Manitowoc Crane Group - Shanghai
China (Sales, Parts & Service)
Tel: [Int + 86] (0) 21 64955555
Fax: [Int + 86] (0) 2164852038
Manitowoc Crane Group - Beijing
China (Sales, Parts & Service)
Tel: [Int + 86] (0) 10 646 71690
Fax: [Int + 86] (0) 10 646 71691
Manitowoc Crane Group - Middle East
(Sales)
Tel: [Int + 971] (0) 4 348 4478
Fax: [Int + 971] (0) 4 348 4478
(Parts & Service)
Tel: [Int + 973] (0) 9 660 899
Fax: [Int + 973] (0) 2 707 740

Distributed By:

Manitowoc Crane CARE

www.manitowoccranegroup.com

Constant improvement and engineering progress make it necessary that we reserve the right to make specification, equipment, and price changes without notice. Illustrations shown may include optional equipment and accessories, and may not include all standard equipment.

0706-2M Printed in USA Form No. TMS500E PG Part No. 01-131 Manitowoc Crane Group 2006

Courtesy of Crane Market