GROVE® worldwide

cranes

LOAD CHARTS
RT855B

85% STABILITY
ON OUTRIGGERS
75% STABILITY
ON RUBBER

83820

SERIAL NUMBER

CONTENTS

NOTES FOR LIFTING CAPACITIES

GENERAL:

1. Rated loads as shown on lift chart pertain to this machine as originally manufactured and equipped. Modifications to the machine or use of optional equipment other than that specified can result in a reduction of capacity.
2. Construction equipment can be hazardous if improperly operated or maintained. Operation and maintenance of this machine shall be in compliance with the information in the Operator's and Safety Handbook, Service Manual and Parts Manual supplied with this machine. If these manuals are missing, order replacements from the manufacturer through the distributor.
3. The operator and other personnel associated with machine shall fully acquaint themselves with the latest American National Standards Institute (ANSI) Safety Standards for cranes.

SETUP:

1. The machine shall be leveled on a firm supporting surface. Depending on the nature of the supporting surface, it may be necessary to have structural supports under the outrigger floats or tires to spread the load to a larger bearing surface.
2. For outrigger operation, outriggers shall be properly extended with tires raised free of crane weight before operating the boom or lifting loads.
3. If machine is equipped with front jack cylinder, the front jack cylinder shall be set in accordance with written procedure.
4. When equipped with extendable counterweight, the counterweight shall be fully extended before operation.
5. Tires shall be inflated to the recommended pressure before lifting on rubber.
6. With certain boom and hoist tackle combinations, maximum capacities may not be obtainable with standard cable lengths.
7. Do not travel with crane boom extension or jib erected unless otherwise noted. Refer to "Operator's and Safety Handbook".

OPERATION:

1. Rated loads at rated radius shall not be exceeded. Do not tip the machine to determine allowable loads. For clamshell or concrete bucket operation, weight of bucket and load must not exceed 80% of rated lifting capacities.
2. All rated loads have been tested to and meet minimum requirements of SAE J1063 OCT90 - Cantilevered Boom Crane Structures - Method of Test, and do not exceed 85% of the tipping load on outriggers fully extended and 50% extended, and 75% of the tipping load on outriggers 0% extended (fully retracted) as determined by SAE J765 OCT90 Crane Stability Test Code.
3. Rated loads include the weight of hookblock, slings and auxiliary lifting devices and their weights shall be subtracted from the listed rating to obtain the net load to be lifted. When more than the minimum required hoist reeving is used, the additional rope weight shall be considered part of the load to be handled.
4. Load ratings are based on freely suspended loads. No attempt shall be made to move a load horizontally on the ground in any direction.
5. Rated loads do not account for wind on lifted load or boom. It is recommended when wind velocity is above 20 m.p.h. (32 km/h), rated loads and boom lengths shall be appropriately reduced.
6. Rated loads are for lift crane service only.
7. Do not operate at a radius or boom length where capacities are not listed. At these positions, the machine may overturn without any load on the hook.
8. The maximum load which can be telescoped is not definable because of variations in loadings and crane maintenance, but it is safe to attempt retraction and extension within the limits of the capacity chart.
9. When either boom length or radius or both are between values listed, the smallest load shown at either the next larger radius or next longer or shorter boom length shall be used.
10. For safe operation, the user shall make due allowances for his particular job conditions, such as: soft or uneven ground, out of level conditions, high winds, side loads, pendulum action, jerking or sudden stopping of loads, hazardous conditions, experience of personnel, two machine lifts, traveling with loads, electric wires, etc. Side pull on boom or jib is extremely dangerous.
11. If machine is equipped with individually controlled powered boom sections, the boom sections must be extended equally at all times.
12. Never handle personnel with this machine without written approval from Grove North America.
13. Keep load handling devices a minimum of 18 inches (45.7 cm) below boom head at all times.
14. The boom angle before loading should be greater than the loaded boom angle to account for deflection.
15. Capacities appearing above the bold line are based on structural strength and tipping should not be relied upon as a capacity limitation.
16. Capacities for the 37 ft. (11.3 m) boom length shall be lifted with boom fully retracted. If boom is not fully retracted, capacities shall not exceed those shown for the 45 ft. (13.7 m) boom length.
17. When operating the machine in the "On Outriggers 50% Extended (17'4" spread)" mode, the outrigger beam pins must be engaged. When operating in the "On Outriggers 0% Extended (10'4" spread)" mode, the outrigger beams must be fully retracted. Failure to follow these precautions could result in structural damage or loss of stability of the machine.

DEFINITIONS:

1. Operating Radius: Horizontal distance from a projection of the axis of rotation to the supporting surface before loading to the center of the vertical hoist line or tackle with load applied.
2. Loaded Boom Angle (Shown in Parenthesis on Main Boom Capacity Chart): is the angle between the boom base section and the horizontal, after lifting the rated load at the rated radius with the rated boom length.
3. Working Area: Areas measured in a circular arc about the center line of rotation as shown on the working area diagram.
4. Freely Suspended Load: Load hanging free with no direct external force applied except by the lift cable.
5. Side Load: Horizontal force applied to the lifted load either on the ground or in the air.

RATED LIFTING CAPACITIES IN POUNDS WITH COUNTERWEIGHT
37 FT. - 115 FT. BOOM

ON OUTRIGGERS FULLY EXTENDED - 360°

Radius in Feet	#0001								
	Main Boom Length in Feet								
	37	45	55	*63	75	85	95	105	115
10	+110,000 (69)	86,600 (73)	75,550 (76.5)						
12	97,800 (65.5)	86,600 (70.5)	75,550 (74.5)	60,950 (76.5)					
15	86,500 (59.5)	81,050 (66)	75,550 (71)	60,950 (73.5)	44,100 (77)				
20	68,950 (49.5)	67,500 (58.5)	64,000 (65)	58,950 (68.5)	44,100 (73)	43,450 (75.5)	40,400 (77.5)		
25	54,900 (36.5)	54,200 (50)	53,400 (59)	49,100 (63.5)	40,200 (68.5)	36,750 (71.5)	34,350 (74)	30,600 (76)	@24,450 (78)
30		41,950 (40)	41,400 (52)	41,050 (58)	34,800 (64.5)	31,650 (68)	29,450 (71)	27,350 (73.5)	22,200 (75.5)
35		33,550 (26)	33,000 (44.5)	32,700 (52)	30,550 (60)	27,650 (64)	25,700 (67.5)	24,250 (70.5)	19,900 (72.5)
40			26,900 (35.5)	26,600 (46)	27,100 (55)	24,500 (60.5)	22,650 (64)	21,300 (67.5)	17,800 (70)
45	See Note 16		21,100 (23.5)	20,850 (38.5)	22,200 (50)	21,850 (56)	20,150 (60.5)	18,900 (64.5)	16,000 (67)
50				16,550 (29)	17,850 (44.5)	18,950 (51.5)	18,050 (57)	16,900 (61)	14,550 (64.5)
55				13,250 (13.5)	14,550 (38)	15,600 (47)	16,250 (53)	15,200 (57.5)	13,250 (61.5)
60					12,000 (30.5)	12,950 (42)	13,550 (49)	13,750 (54.5)	12,300 (58.5)
65					9,940 (20)	10,800 (36)	11,400 (44.5)	11,950 (50.5)	11,350 (55.5)
70						9,050 (29)	9,620 (39.5)	10,150 (46.5)	10,450 (52)
75						7,560 (19)	8,100 (34)	8,650 (42.5)	9,200 (48.5)
80							6,840 (27.5)	7,360 (38)	7,890 (45)
85							5,780 (18)	6,270 (32.5)	6,760 (41)
90								5,310 (26.5)	5,770 (36.5)
95								4,470 (17.5)	4,900 (31.5)
100									4,130 (25.5)
105									3,440 (17)
Minimum boom angle (deg.) for indicated length (no load)									0
Maximum boom length (ft.) at 0 deg. boom angle (no load)									115

NOTE: ( ) Boom angles are in degrees.

A6-829-011790C

#LMI operating code. Refer to LMI manual for operating instructions.

*63 ft. boom length is with inner-mid extended and outer-mid and fly retracted.

+9 parts of line required to lift this capacity (using aux.boom nose). Refer to Operator's and Safety Handbook for reeving diagram.

@This capacity is based on maximum boom angle.

RATED LIFTING CAPACITIES IN POUNDS WITH 35 FT. FIXED LENGTH BOOM EXTENSION ON OUTRIGGERS FULLY EXTENDED - 360° WITH COUNTERWEIGHT

Radius in Feet	35 ft. LENGTH	
	#0051	**#0053**
	2° OFFSET	30° OFFSET
35	*12,900 (78)	
40	12,200 (75.5)	
45	11,450 (73.5)	
50	10,750 (71.5)	7,800 (77)
55	10,150 (69.5)	7,610 (74.5)
60	9,640 (67.5)	7,450 (72.5)
65	9,150 (65)	7,310 (70.5)
70	8,720 (63)	7,180 (68)
75	8,320 (60.5)	7,060 (66)
80	7,960 (58.5)	6,950 (63.5)
85	7,630 (56)	6,860 (61)
90	6,970 (53.5)	6,770 (58.5)
95	6,040 (51)	6,040 (56)
100	5,210 (48.5)	5,210 (53)
105	4,470 (45.5)	4,470 (50)
110	3,800 (42.5)	3,800 (47)
115	3,200 (39.5)	3,200 (43.5)
120	2,660 (36)	2,660 (40)
125	2,160 (32.5)	2,160 (36)
130	1,710 (28)	
135	1,290 (23)	

A6-829-012129A

NOTE: ( ) Boom angles are in degrees.
*This capacity is based upon maximum boom angle.
#LMI operating code. Refer to LMI manual for instructions.

1. All capacities above the bold line are based on structural strength of boom extension.
2. 35 ft. boom extension length may be used for single line lifting service only.
3. Radii listed are for a fully extended boom with the boom extension erected. For main boom lengths less than fully extended, the rated loads are determined by boom angle. Use only the column which corresponds to the boom extension length and offset for which the machine is configured. For boom angles not shown, use the rating of the next lower boom angle.

   WARNING: Operation of this machine with heavier loads than the capacities listed is strictly prohibited. Machine tipping with boom extension occurs rapidly and without advance warning.
4. Boom angle is the angle above or below horizontal of the longitudinal axis of the boom base section after lifting rated load.
5. Capacities listed are with outriggers fully extended and vertical jacks set only.
6. 35 FT. FIXED LENGTH BOOM EXTENSION WARNING: For main boom length greater than 105 ft. with 35 ft. boom extension in working position, the boom angle must not be less than 15° since loss of stability will occur causing a tipping condition. The boom angle is not restricted for main boom length equal to or less than 105 ft. This warning also applies for boom extension erection purposes.

RATED LIFTING CAPACITIES IN POUNDS WITH 35 FT. - 60 FT. TELE-OFFSETTABLE BOOM EXTENSION ON OUTRIGGERS FULLY EXTENDED - 360° WITH COUNTERWEIGHT

Radius in Feet	35 ft. LENGTH		60 ft. LENGTH	
	#0021	**#0023**	**#0041**	**#0043**
	2° OFFSET	30° OFFSET	2° OFFSET	30° OFFSET
35	*12,900 (78)			
40	11,900 (75.5)		*6,700 (78)	
45	11,150 (73.5)		6,500 (77.5)	
50	10,450 (71.5)	7,500 (77)	6,400 (76)	
55	9,870 (69.5)	7,310 (74.5)	6,300 (74)	
60	9,340 (67.5)	7,150 (72.5)	6,200 (72.5)	
65	8,850 (65)	7,010 (70.5)	6,100 (70.5)	
70	8,420 (63)	6,880 (68)	6,000 (69)	4,000 (77)
75	8,020 (60.5)	6,760 (66)	5,670 (67)	3,680 (75)
80	7,660 (58.5)	6,650 (63.5)	5,340 (65)	3,500 (73.5)
85	7,330 (56)	6,560 (61)	5,010 (63.5)	3,350 (71.5)
90	6,490 (53.5)	6,470 (58.5)	4,680 (61.5)	3,280 (69.5)
95	5,550 (51)	5,550 (56)	4,350 (59.5)	3,220 (67)
100	4,720 (48.5)	4,720 (53)	4,000 (57.5)	3,160 (65)
105	3,980 (45.5)	3,980 (50)	3,670 (55)	3,100 (63)
110	3,310 (42.5)	3,310 (47)	3,340 (53)	3,050 (60.5)
115	2,710 (39.5)	2,710 (43.5)	3,070 (51)	3,000 (58)
120	2,170 (36)	2,170 (40)	2,950 (48.5)	2,960 (55.5)
125	1,670 (32.5)	1,670 (36)	2,840 (46)	2,930 (53)
130	1,220 (28)	1,220 (31)	2,730 (43.5)	2,730 (50.5)
135			2,280 (41)	2,280 (47.5)
140			1,860 (38)	1,860 (44.5)
145			1,470 (35)	1,470 (41)
150			1,110 (31.5)	1,110 (37)

NOTE: ( ) Boom angles are in degrees. A6-829-011795B

*This capacity is based upon maximum boom angle.

#LMI operating code. Refer to LMI manual for instructions.

1. All capacities above the bold line are based on structural strength of boom extension.
2. 35 ft. and 60 ft. boom extension lengths may be used for single line lifting service only.
3. Radii listed are for a fully extended boom with the boom extension erected. For main boom lengths less than fully extended, the rated loads are determined by boom angle. Use only the column which corresponds to the boom extension length and offset for which the machine is configured. For boom angles not shown, use the rating of the next lower boom angle.

   WARNING: Operation of this machine with heavier loads than the capacities listed is strictly prohibited. Machine tipping with boom extension occurs rapidly and without advance warning.
4. Boom angle is the angle above or below horizontal of the longitudinal axis of the boom base section after lifting rated load.
5. Capacities listed are with outriggers fully extended and vertical jacks set only.
6. 35 FT. TELE OFFSETTABLE BOOM EXTENSION WARNING: For main boom length greater than 105 ft. with 35 ft. tele. boom extension in working position, the boom angle must not be less than 24° since loss of stability will occur causing a tipping condition. The boom angle is not restricted for main boom length equal to or less than 105 ft. This warning also applies for boom extension erection purposes.

   60 FT. TELE OFFSETTABLE BOOM EXTENSION WARNING: For main boom length greater than 95 ft. with 60 ft. tele. boom extension in working position, the boom angle must not be less than 29° since loss of stability will occur causing a tipping condition. The boom angle is not restricted for main boom length equal to or less than 95 ft. This warning also applies for boom extension erection purposes.

RATED LIFTING CAPACITIES ON RUBBER WITH 29.5x25 (28 ply) GENERAL TIRES
STATIONARY CAPACITIES - 360°

Radius in Feet	#9005						
	Main Boom Length in Feet						
	37	45	55	*63	75	85	95
10	33,250 (68.5)	31,400 (73)					
12	29,100 (65)	27,450 (70)	25,850 (74)				
15	23,700 (59.5)	22,350 (65.5)	21,650 (70.5)				
20	16,550 (49)	15,550 (58)	15,200 (65)	14,950 (68.5)	13,150 (72.5)	12,050 (75)	
25	10,900 (36)	10,800 (49.5)	10,600 (58.5)	10,500 (63.5)	9,600 (68)	9,990 (71)	9,110 (73.5)
30		7,560 (39.5)	7,120 (52)	6,780 (58)	7,000 (64)	8,030 (67.5)	9,110 (70.5)
35		5,000 (26)	4,700 (44.5)	4,460 (52)	5,000 (59.5)	6,170 (64)	6,650 (67)
40			2,620 (35.5)	2,310 (45.5)	3,410 (54.5)	4,410 (60)	4,650 (63.5)
45					2,120 (49.5)	2,730 (55.5)	3,010 (60)
50					1,050 (44)	1,130 (51)	1,590 (56.5)

STATIONARY CAPACITIES - DEFINED ARC OVER FRONT (See Note 3)

Radius in Feet	#9005						
	Main Boom Length in Feet						
	37	45	55	*63	75	85	95
10	44,100 (68.5)	39,100 (73)					
12	44,100 (65)	39,100 (70)	29,950 (74)	23,800 (76.5)			
15	42,800 (59.5)	39,100 (65.5)	29,950 (70.5)	23,800 (73.5)	19,400 (76.5)		
20	34,100 (49)	30,000 (58)	27,600 (65)	23,800 (68.5)	19,400 (72.5)	15,950 (75)	
25	26,100 (36)	23,500 (49.5)	22,250 (58.5)	19,900 (63.5)	19,400 (68)	15,950 (71)	15,500 (73.5)
30		18,650 (39.5)	17,850 (52)	16,450 (58)	15,750 (64)	14,750 (67.5)	13,750 (70.5)
35		13,650 (26)	13,300 (44.5)	13,000 (52)	12,750 (59.5)	12,400 (64)	12,050 (67)
40			9,920 (35.5)	9,650 (45.5)	10,200 (54.5)	10,250 (60)	10,350 (63.5)
45			7,420 (23)	7,190 (38)	8,000 (49.5)	8,370 (55.5)	8,750 (60)
50				5,300 (29)	6,100 (44)	6,640 (51)	7,180 (56.5)
55				3,810 (13.5)	4,430 (37.5)	4,940 (46.5)	5,650 (52.5)
60					2,960 (30)	3,560 (41.5)	4,170 (48.5)
65					1,650 (19.5)	2,190 (35.5)	2,740 (44)
70							1,340 (39)

A6-829-012232 & -012231

RATED LIFTING CAPACITIES ON RUBBER WITH 29.5x25 (28 PLY) TIRES (cont'd.)

PICK & CARRY CAPACITIES - UP TO 2.5 MPH
BOOM CENTERED OVER FRONT (SEE NOTE 7)

Radius in Feet	#9006						
	Main Boom Length in Feet						
	37	45	55	*63	75	85	95
10	47,050 (68.5)	32,100 (73)					
12	43,800 (65)	32,100 (70)	28,150 (74)	25,000 (76.5)			
15	39,200 (59.5)	32,100 (65.5)	28,150 (70.5)	25,000 (73.5)	19,650 (76.5)		
20	32,100 (49)	32,100 (58)	28,150 (65)	25,000 (68.5)	19,650 (72.5)	16,500 (75)	11,850 (77)
25	25,650 (36)	25,450 (49.5)	25,200 (58.5)	25,000 (63.5)	19,650 (68)	16,500 (71)	11,850 (73.5)
30		18,650 (39.5)	18,150 (52)	17,800 (58)	18,050 (64)	16,500 (67.5)	11,850 (70.5)
35		13,650 (26)	13,300 (44.5)	13,000 (52)	14,500 (59.5)	15,750 (64)	11,850 (67)
40			9,800 (35.5)	9,550 (45.5)	10,800 (54.5)	11,850 (60)	11,850 (63.5)
45			7,420 (23)	7,190 (38)	8,400 (49.5)	9,410 (55.5)	10,150 (60)
50				5,300 (29)	6,410 (44)	7,340 (51)	8,040 (56.5)
55				3,810 (13.5)	4,840 (37.5)	5,700 (46.5)	6,360 (52.5)
60					3,590 (30)	4,370 (41.5)	5,000 (48.5)
65					2,560 (19.5)	3,280 (35.5)	3,650 (44)
70						2,300 (28.5)	2,400 (39)
75						1,400 (28.5)	1,520 (33.5)

NOTE: ( ) Boom angles are in degrees. A6-829-012233A

#LMI operating code. Refer to LMI manual for operating instructions.

*63 ft. boom length is with inner-mid extended and outer-mid and fly retracted.

1. Capacities do not exceed 75% of tipping loads as determined by test in accordance with SAE J765 OCT90.
2. Capacities are applicable to machines equipped with General 29.5 x 25 (28 ply) tires at 65 psi cold inflation pressure.
3. Defined Arc - Over front includes 6° on either side of longitudinal centerline of machine.
4. Capacities appearing above the bold line are based on structural strength and tipping should not be relied upon as a capacity limitation.
5. Capacities are applicable only with machine on firm level surface.
6. On rubber lifting with boom extensions not permitted.
7. For pick and carry operation, boom must be centered over front of machine, mechanical swing lock engaged and load restrained from swinging. When handling loads in the structural range with capacities close to maximum ratings, travel should be reduced to creep speeds.
8. Axle lockouts must be functioning when lifting on rubber.
9. All lifting depends on proper tire inflation, capacity and condition. Capacities must be reduced for lower tire inflation pressures. See lifting capacity chart for tire used. Damaged tires are hazardous to safe operation of crane.
10. Creep - not over 200 ft. of movement in any 30 minute period and not exceeding 1 mph.

	No Load Stability Data	Main Boom 95 ft.
Front (No Load)	Min. boom angle (deg.) for indicated length	37
	Max. boom length (ft.) at 0 deg. boom angle	63
360 Deg. (No Load)	Min. boom angle (deg.) for indicated length	54
	Max. boom length (ft.) at 0 deg. boom angle	45
Pick&Carry (No Load)	Min. boom angle (deg.) for indicated length	28
	Max. boom length (ft.) at 0 deg. boom angle	85

LINE PULLS AND REEVING INFORMATION

HOISTS	CABLE SPECS.	PERMISSIBLE LINE PULLS
Main & Aux. Model 30	3/4" (19 mm) 18x19Class or 35x7 Rotation Resistant Min. Breaking Str. 64,600 lbs.	12,920 lbs.
Main & Aux. Model 30	3/4" (19 mm) 6X37 Class EIPS IWRC Special Flexible Min. Breaking Str. 58,800 lbs.	12,920 lbs.

WEIGHT REDUCTIONS FOR LOAD HANDLING DEVICES

35 FT. BOOM EXTENSION	
*Stowed -	670 lbs.
*Erected -	5,180 lbs.
35 FT. - 60 FT. TELE. BOOM EXTENSION	
*Stowed -	896 lbs.
*Erected (Retracted) -	6,801 lbs.
*Erected (Extended) -	9,230 lbs.

*Reduction of main boom capacities

AUXILIARY BOOM HEAD	110 lbs.
HOOKBLOCKS and HEADACHE BALLS:	
55 Ton, 4 Sheave w/cheekplates	1,328 lbs.+
55 Ton, 4 Sheave w/o cheekplates	1,040 lbs.+
15 Ton, 1 Sheave	420 lbs.+
10 Ton Headache Ball	560 lbs.+

+Refer to rating plate for actual weight.

When lifting over swingaway and/or jib combinations, deduct total weight of all load handling devices reeved over main boom nose directly from swingaway or jib capacity.

NOTE: All load handling devices and boom attachments are considered part of the load and suitable allowances MUST BE MADE for their combined weights. Weights are for Grove furnished equipment.

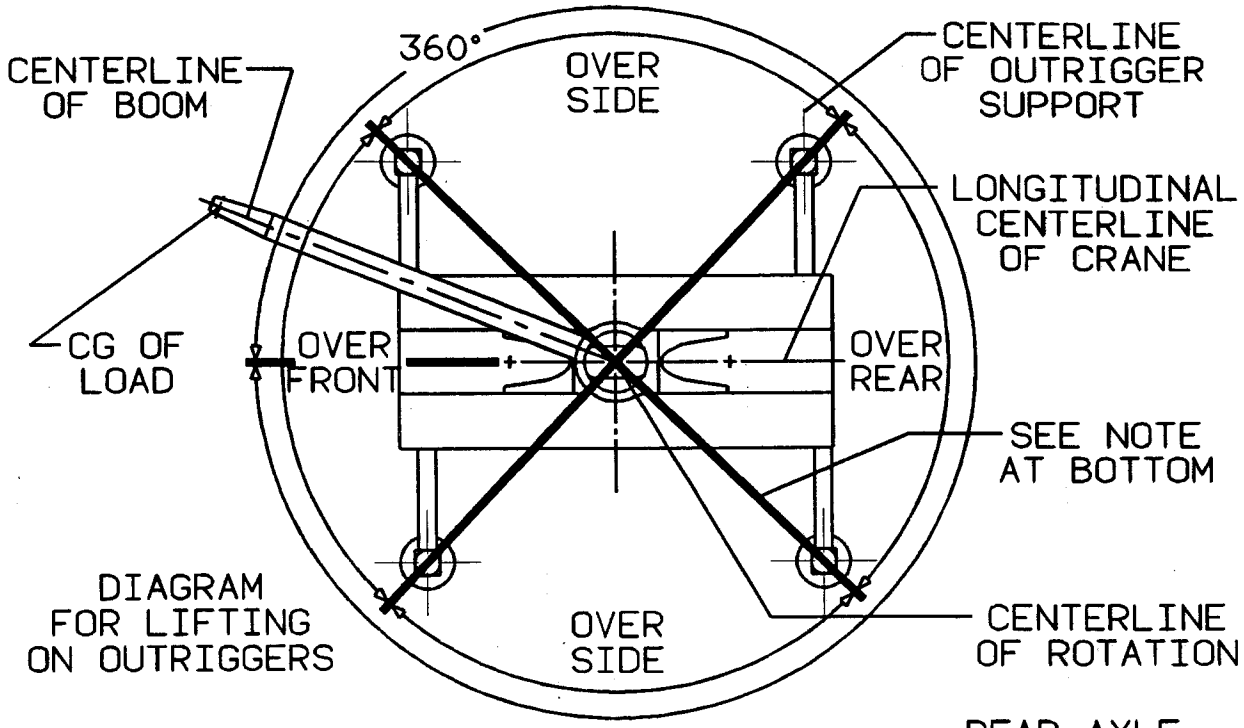

DIAGRAM FOR LIFTING ON OUTRIGGERS

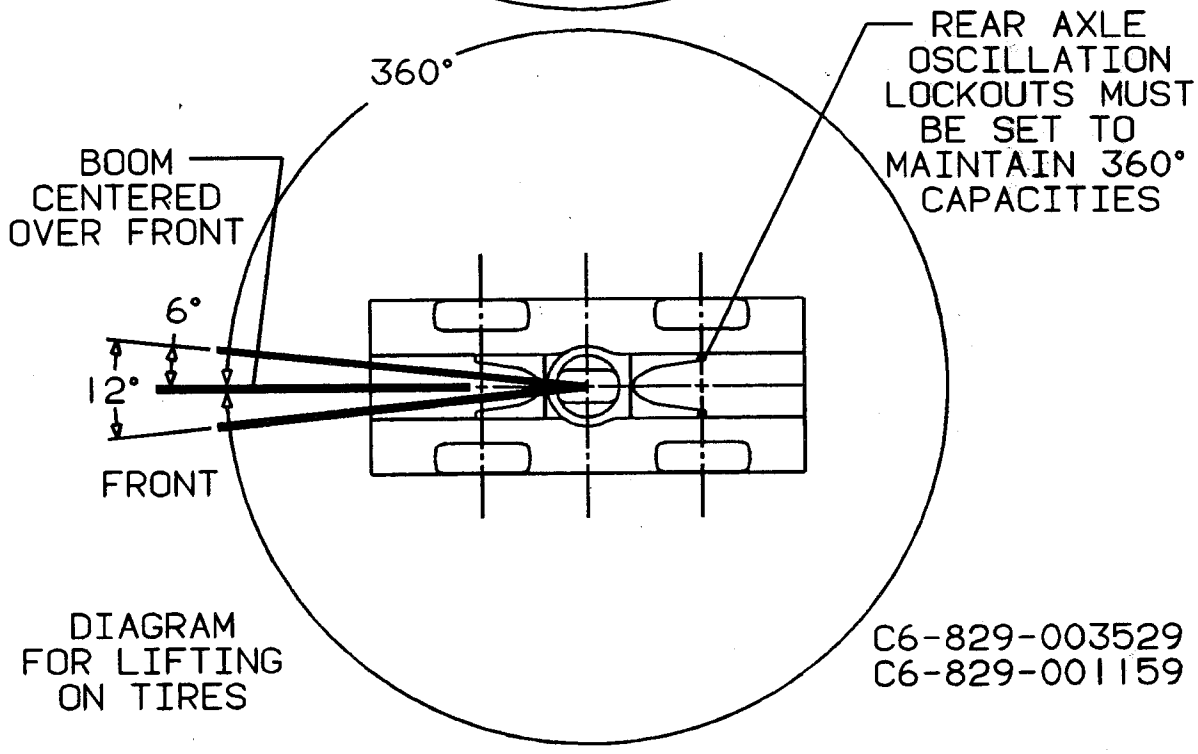

DIAGRAM FOR LIFTING ON TIRES

C6-829-003529
C6-829-001159

BOLD LINES DETERMINE THE LIMITING POSITION OF ANY LOAD FOR OPERATION WITHIN WORKING AREAS INDICATED

WORKING AREA DIAGRAM

WORKING RANGE DIAGRAM
(BOOM DEFLECTION NOT SHOWN) D6-829-011633

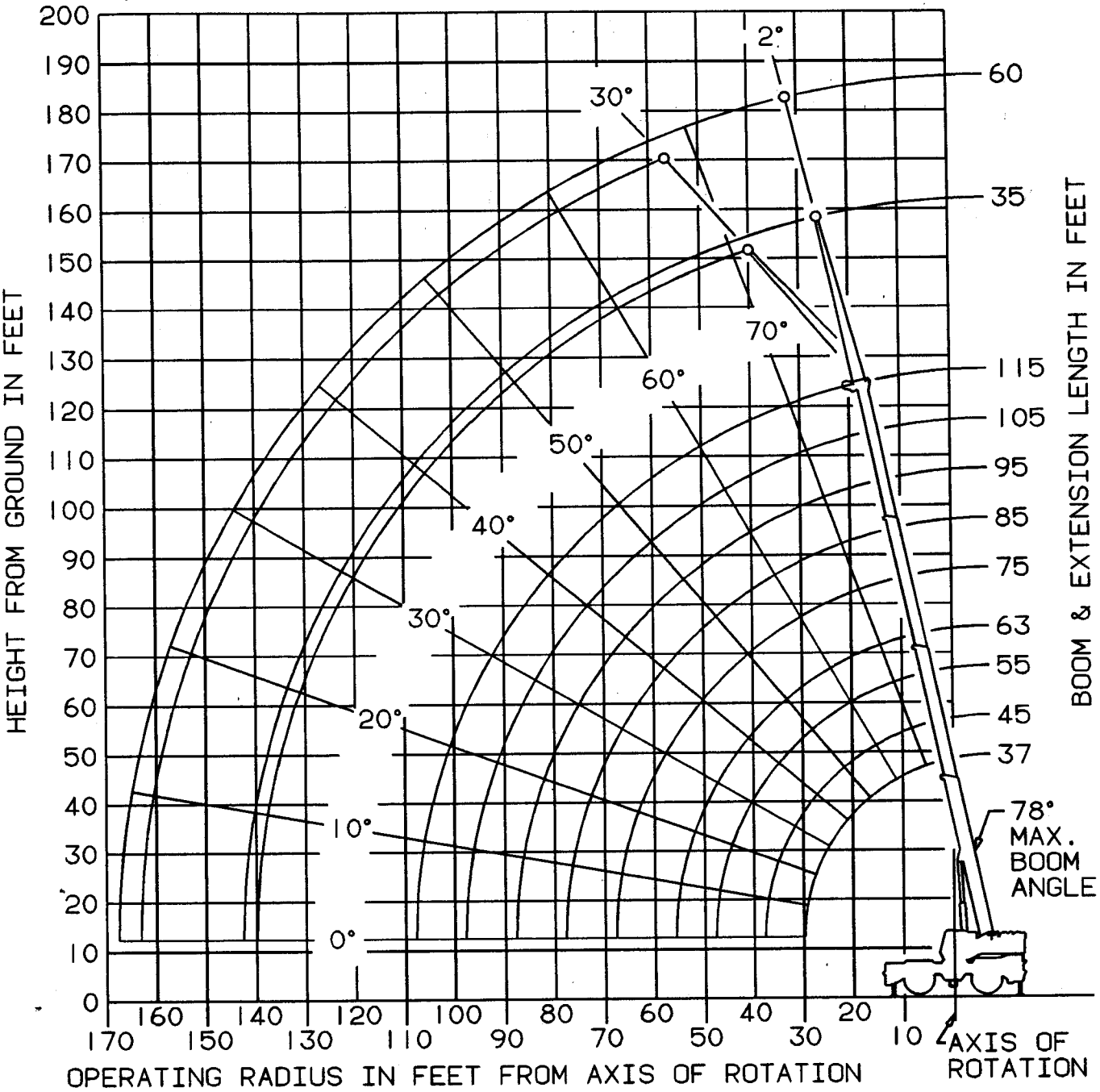

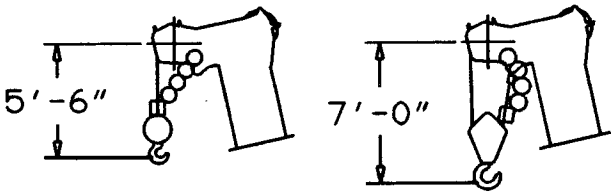

DIMENSIONS ARE FOR LARGEST GROVE FURNISHED HOOK BLOCK AND HEADACHE BALL, WITH ANTI-TWO BLOCK ACTIVATED.

ZERO DEGREE BOOM ANGLE

ON OUTRIGGERS

ON OUTRIGGERS FULLY EXTENDED - 360°									
Boom Angle	Main Boom Length in Feet								
	37	45	55	*63	75	85	95	105	115
0°	24,400 (29.8)	17,750 (37.8)	12,200 (47.8)	9,000 (55.8)	6,820 (67.8)	5,470 (77.8)	4,400 (87.8)	3,540 (97.8)	2,820 (107.8)

ON OUTRIGGERS 50% EXTENDED (17'4" SPREAD) - 360°								
Boom Angle	Main Boom Length in Feet							
	37	45	55	*63	75	85	95	105
0°	24,400 (29.8)	17,750 (37.8)	10,450 (47.8)	6,700 (55.8)	4,260 (67.8)	2,880 (77.8)	1,850 (87.8)	1,050 (97.8)

ON OUTRIGGERS 0% EXTENDED (10'4" SPREAD) - 360°					
Boom Angle	Main Boom Length in Feet				
	37	45	55		
0°	12,600 (29.8)	7,080 (37.8)	3,060 (47.8)		

ON RUBBER GENERAL 29.5 X 25 (28 PLY) TIRES

STATIONARY CAPACITY (DEFINED ARC OVER FRONT)					
Boom Angle	Main Boom Length in Feet				
	37	45	55	*63	
0°	19,300 (29.8)	11,650 (37.8)	6,310 (47.8)	3,610 (55.8)	

STATIONARY CAPACITY (360°)			
Boom Angle	Main Boom Length in Feet		
	37	45	
0°	8,320 (29.8)	3,840 (37.8)	

PICK & CARRY CAPACITY (BOOM CENTERED OVER FRONT)						
Boom Angle	Main Boom Length in Feet					
	37	45	55	*63	75	85
0°	19,300 (29.8)	11,200 (37.8)	6,310 (47.8)	3,610 (55.8)	2,070 (67.8)	1,180 (77.8)

A6-829-012234

Note: ( ) Reference radii are in feet.
*63 ft. boom length is with inner-mid extended and outer-mid and fly retracted.

RATED LIFTING CAPACITIES IN POUNDS WITH COUNTERWEIGHT
37 FT. - 115 FT. BOOM

ON OUTRIGGERS 50% EXTENDED (17 FT. 4 IN. SPREAD) - 360°

Radius in Feet	#4001								
	Main Boom Length in Feet								
	37	45	55	*63	75	85	95	105	115
10	+110,000 (69)	86,600 (73)	75,550 (76.5)						
12	97,800 (65.5)	86,600 (70.5)	75,550 (74.5)	60,950 (76.5)					
15	86,500 (59.5)	81,050 (66)	75,550 (71)	60,950 (73.5)	44,100 (77)				
20	60,750 (49.5)	56,900 (58.5)	53,200 (65)	50,650 (68.5)	44,100 (73)	43,450 (75.5)	40,400 (77.5)		
25	41,400 (36.5)	39,350 (50)	36,850 (59)	35,250 (63.5)	35,450 (68.5)	35,300 (71.5)	34,350 (74)	30,600 (76)	@24,450 (78)
30		28,750 (40)	27,150 (52)	25,900 (58)	26,550 (64.5)	26,700 (68)	26,750 (71)	26,650 (73.5)	22,200 (75.5)
35		21,150 (26)	20,700 (44.5)	19,700 (52)	20,500 (60)	20,850 (64)	21,050 (67.5)	21,150 (70.5)	19,900 (72.5)
40			15,850 (35.5)	15,200 (46)	16,150 (55)	16,650 (60.5)	16,950 (64)	17,100 (67.5)	17,200 (70)
45	See Note 16		12,100 (23.5)	11,900 (38.5)	12,900 (50)	13,400 (56)	13,800 (60.5)	14,000 (64.5)	14,200 (67)
50				9,210 (29)	10,300 (44.5)	10,900 (51.5)	11,300 (57)	11,600 (61)	11,800 (64.5)
55				6,990 (13.5)	8,150 (38)	8,890 (47)	9,320 (53)	9,640 (57.5)	9,870 (61.5)
60					6,390 (30.5)	7,220 (42)	7,680 (49)	8,020 (54.5)	8,270 (58.5)
65					4,950 (20)	5,760 (36)	6,290 (44.5)	6,660 (50.5)	6,930 (55.5)
70						4,490 (29)	5,000 (39.5)	5,500 (46.5)	5,780 (52)
75						3,410 (19)	3,920 (34)	4,420 (42.5)	4,790 (48.5)
80							3,000 (27.5)	3,480 (38)	3,930 (45)
85							2,230 (18)	2,690 (32.5)	3,140 (41)
90								1,980 (26.5)	2,410 (36.5)
95								1,360 (17.5)	1,760 (31.5)
100									1,190 (25.5)
Minimum boom angle (deg.) for indicated length (no load)									11.5
Maximum boom length (ft.) at 0 deg. boom angle (no load)									105

NOTE: ( ) Boom angles are in degrees.

A6-829-011791C

#LMI operating code. Refer to LMI manual for operating instructions.

*63 ft. boom length is with inner-mid extended and outer-mid and fly retracted.

+9 parts of line required to lift this capacity (using auxiliary boom nose). Refer to Operator's and Safety Handbook for reeving diagram.

@This capacity is based on maximum boom angle.

RATED LIFTING CAPACITIES IN POUNDS WITH 35 FT. FIXED LENGTH BOOM EXTENSION ON OUTRIGGERS 50% EXTENDED (17'4" SPREAD) - 360° WITH COUNTERWEIGHT

Radius in Feet	35 ft. LENGTH	
	#4051	**#4053**
	2° OFFSET	30° OFFSET
35	*12,900 (78)	
40	12,200 (75.5)	
45	11,450 (73.5)	
50	10,750 (71.5)	7,800 (77)
55	9,720 (69.5)	7,610 (74.5)
60	8,190 (67.5)	7,450 (72.5)
65	6,900 (65)	6,900 (70.5)
70	5,800 (63)	5,800 (68)
75	4,840 (60.5)	4,840 (66)
80	4,010 (58.5)	4,010 (63.5)
85	3,270 (56)	3,270 (61)
90	2,620 (53.5)	2,620 (58.5)
95	2,030 (51)	2,030 (56)
100	1,510 (48.5)	1,510 (53)
105	1,030 (45.5)	1,030 (50)

A6-829-012145C

NOTE: ( ) Boom angles are in degrees.
*This capacity is based upon maximum boom angle.
#LMI operating code. Refer to LMI manual for instructions.

1. All capacities above the bold line are based on structural strength of boom extension.
2. 35 ft. boom extension length may be used for single line lifting service only.
3. Radii listed are for a fully extended boom with the boom extension erected. For main boom lengths less than fully extended, the rated loads are determined by boom angle. Use only the column which corresponds to the boom extension length and offset for which the machine is configured. For boom angles not shown use the rating of the next lower boom angle.

   WARNING: Operation of this machine with heavier loads than the capacities listed is strictly prohibited. Machine tipping with boom extension occurs rapidly and without advance warning.
4. Boom angle is the angle above or below horizontal of the longitudinal axis of the boom base section after lifting rated load.
5. Capacities listed are with outriggers properly extended and vertical jacks set only.
6. 35 FT. FIXED LENGTH BOOM EXTENSION WARNING: For main boom length greater than 75 ft. with 35 ft. boom extension in working position, the boom angle must not be less than 45° since loss of stability will occur causing a tipping condition. The boom angle is not restricted for main boom length equal to or less than 75 ft. This warning also applies for boom extension erection purposes.

RATED LIFTING CAPACITIES IN POUNDS WITH 35 FT. - 60 FT. TELE-OFFSETTABLE BOOM EXTENSION ON OUTRIGGERS 50% EXTENDED (17' 4" SPREAD) - 360° WITH COUNTERWEIGHT

Radius in Feet	35 ft. LENGTH		60 ft. LENGTH	
	#4021	**#4023**	**#4041**	**#4043**
	2° OFFSET	30° OFFSET	2° OFFSET	30° OFFSET
35	*12,900 (78)			
40	11,900 (75.5)		*6,700 (78)	
45	11,150 (73.5)		6,270 (77.5)	
50	10,450 (71.5)	7,500 (77)	5,860 (76)	
55	9,150 (69.5)	7,310 (74.5)	5,510 (74)	
60	7,620 (67.5)	7,150 (72.5)	5,180 (72.5)	
65	6,330 (65)	6,330 (70.5)	4,900 (70.5)	
70	5,230 (63)	5,230 (68)	4,630 (69)	4,000 (77)
75	4,270 (60.5)	4,270 (66)	4,400 (67)	3,680 (75)
80	3,430 (58.5)	3,430 (63.5)	4,180 (65)	3,500 (73.5)
85	2,690 (56)	2,690 (61)	3,920 (63.5)	3,350 (71.5)
90	2,040 (53.5)	2,040 (58.5)	3,270 (61.5)	3,270 (69.5)
95	1,450 (51)	1,450 (56)	2,690 (59.5)	2,690 (67)
100			2,170 (57.5)	2,170 (65)
105			1,690 (55)	1,690 (63)
110			1,260 (53)	1,260 (60.5)

NOTE: ( ) Boom angles are in degrees. A6-829-011796D

*This capacity is based upon maximum boom angle.

#LMI operating code. Refer to LMI manual for instructions.

1. All capacities above the bold line are based on structural strength of boom extension.
2. 35 ft. and 60 ft. boom extension lengths may be used for single line lifting service only.
3. Radii listed are for a fully extended boom with the boom extension erected. For main boom lengths less than fully extended, the rated loads are determined by boom angle. Use only the column which corresponds to the boom extension length and offset for which the machine is configured. For boom angles not shown, use the rating of the next lower boom angle.

   WARNING: Operation of this machine with heavier loads than the capacities listed is strictly prohibited. Machine tipping with boom extension occurs rapidly and without advance warning.
4. Boom angle is the angle above or below horizontal of the longitudinal axis of the boom base section after lifting rated load.
5. Capacities listed are with outriggers properly extended and vertical jacks set only.
6. 35 FT. TELE OFFSETTABLE BOOM EXTENSION WARNING: For main boom length greater than 75 ft. with 35 ft. tele. boom extension in working position, the boom angle must not be less than 49° since loss of stability will occur causing a tipping condition. The boom angle is not restricted for main boom length equal to or less than 75 ft. This warning also applies for boom extension erection purposes.

   60 FT. TELE OFFSETTABLE BOOM EXTENSION WARNING: For main boom length greater than 63 ft. with 60 ft. tele. boom extension in working position, the boom angle must not be less than 52° since loss of stability will occur causing a tipping condition. The boom angle is not restricted for main boom length equal to or less than 63 ft. This warning also applies for boom extension erection purposes.

RATED LIFTING CAPACITIES IN POUNDS WITH COUNTERWEIGHT
37 FT. - 115 FT. BOOM

ON OUTRIGGERS 0% EXTENDED (10 FT. 4 IN. SPREAD) - 360°

Radius in Feet	#8001								
	Main Boom Length in Feet								
	37	45	55	*63	75	85	95	105	115
10	82,900 (69)	76,200 (73)	69,350 (76.5)						
12	63,000 (65.5)	58,400 (70.5)	53,700 (74.5)	50,500 (76.5)					
15	45,250 (59.5)	42,150 (66)	39,000 (71)	36,900 (73.5)	36,450 (77)				
20	28,150 (49.5)	27,200 (58.5)	25,200 (65)	23,900 (68.5)	24,250 (73)	24,300 (75.5)	24,150 (77.5)		
25	18,300 (36.5)	17,900 (50)	17,350 (59)	16,350 (63.5)	17,100 (68.5)	17,400 (71.5)	17,500 (74)	17,500 (76)	@17,450 (78)
30		12,200 (40)	11,900 (52)	11,400 (58)	12,350 (64.5)	12,800 (68)	13,050 (71)	13,200 (73.5)	13,300 (75.5)
35		8,590 (26)	8,360 (44.5)	7,980 (52)	8,990 (60)	9,520 (64)	9,890 (67.5)	10,100 (70.5)	10,250 (72.5)
40	See Note 16		5,820 (35.5)	5,410 (46)	6,480 (55)	7,060 (60.5)	7,480 (64)	7,780 (67.5)	7,980 (70)
45			3,920 (23.5)	3,430 (38.5)	4,530 (50)	5,150 (56)	5,600 (60.5)	5,940 (64.5)	6,180 (67)
50				1,860 (29)	2,980 (44.5)	3,620 (51.5)	4,100 (57)	4,460 (61)	4,730 (64.5)
55					1,720 (38)	2,380 (47)	2,870 (53)	3,240 (57.5)	3,530 (61.5)
60						1,340 (42)	1,840 (49)	2,230 (54.5)	2,530 (58.5)
65								1,370 (50.5)	1,680 (55.5)
Minimum boom angle (deg.) for indicated length (no load)									52.5
Maximum boom length (ft.) at 0 deg. boom angle (no load)									55

NOTE: ( ) Boom angles are in degrees. A6-829-011902B

#LMI operating code. Refer to LMI manual for operating instructions.

*63 ft. boom length is with inner-mid extended and outer-mid and fly retracted.

@This capacity is based on maximum boom angle.

RATED LIFTING CAPACITIES IN POUNDS WITHOUT COUNTERWEIGHT
37 FT. - 115 FT. BOOM

ON OUTRIGGERS FULLY EXTENDED - 360°

Radius in Feet	#0801								
	Main Boom Length in Feet								
	37	45	55	*63	75	85	95	105	115
10	+110,000 (69)	86,600 (73)	75,550 (76.5)						
12	97,800 (65.5)	86,600 (70.5)	75,550 (74.5)	60,950 (76.5)					
15	86,500 (59.5)	81,050 (66)	75,550 (71)	60,950 (73.5)	44,100 (77)				
20	64,250 (49.5)	64,250 (58.5)	64,000 (65)	58,950 (68.5)	44,100 (73)	43,450 (75.5)	40,400 (77.5)		
25	48,150 (36.5)	47,450 (50)	46,800 (59)	46,400 (63.5)	40,200 (68.5)	36,750 (71.5)	34,350 (74)	30,600 (76)	@24,450 (78)
30		36,450 (40)	35,850 (52)	35,500 (58)	34,800 (64.5)	31,650 (68)	29,450 (71)	27,350 (73.5)	22,200 (75.5)
35		27,450 (26)	27,100 (44.5)	26,850 (52)	28,050 (60)	27,650 (64)	25,700 (67.5)	24,250 (70.5)	19,900 (72.5)
40			20,150 (35.5)	19,950 (46)	21,150 (55)	22,150 (60.5)	22,650 (64)	21,300 (67.5)	17,800 (70)
45	See Note 16		15,300 (23.5)	15,100 (38.5)	16,350 (50)	17,350 (56)	17,950 (60.5)	18,550 (64.5)	16,000 (67)
50				11,550 (29)	12,800 (44.5)	13,800 (51.5)	14,400 (57)	14,950 (61)	14,550 (64.5)
55				8,870 (13.5)	10,100 (38)	11,100 (47)	11,650 (53)	12,200 (57.5)	12,750 (61.5)
60					8,040 (30.5)	8,970 (42)	9,500 (49)	10,000 (54.5)	10,550 (58.5)
65					6,380 (20)	7,220 (36)	7,740 (44.5)	8,260 (50.5)	8,780 (55.5)
70						5,780 (29)	6,290 (39.5)	6,800 (46.5)	7,310 (52)
75						4,550 (19)	5,060 (34)	5,560 (42.5)	6,060 (48.5)
80							4,020 (27.5)	4,500 (38)	4,990 (45)
85							3,160 (18)	3,610 (32.5)	4,060 (41)
90								2,830 (26.5)	3,250 (36.5)
95								2,140 (17.5)	2,540 (31.5)
100									1,910 (25.5)
105									1,350 (17)
Minimum boom angle (deg.) for indicated length (no load)									0
Maximum boom length (ft.) at 0 deg. boom angle (no load)									115

NOTE: ( ) Boom angles are in degrees. A6-829-012153A

#LMI operating code. Refer to LMI manual for operating instructions.

*63 ft. boom length is with inner-mid extended and outer-mid and fly retracted.

+9 parts of line required to lift this capacity (using aux. boom nose). Refer to Operator's and Safety Handbook for reeving diagram.

@This capacity is based on maximum boom angle.

RATED LIFTING CAPACITIES IN POUNDS WITH 35 FT. FIXED LENGTH BOOM EXTENSION ON OUTRIGGERS FULLY EXTENDED - 360° WITHOUT COUNTERWEIGHT

Radius in Feet	35 ft. LENGTH	
	#0851	**#0853**
	2° OFFSET	30° OFFSET
35	*12,900 (78)	
40	12,200 (75.5)	
45	11,450 (73.5)	
50	10,750 (71.5)	7,800 (77)
55	10,150 (69.5)	7,610 (74.5)
60	9,640 (67.5)	7,450 (72.5)
65	9,150 (65)	7,310 (70.5)
70	8,720 (63)	7,180 (68)
75	7,410 (60.5)	7,060 (66)
80	6,240 (58.5)	6,240 (63.5)
85	5,230 (56)	5,230 (61)
90	4,350 (53.5)	4,350 (58.5)
95	3,580 (51)	3,580 (56)
100	2,890 (48.5)	2,890 (53)
105	2,280 (45.5)	2,280 (50)
110	1,730 (42.5)	1,730 (47)
115	1,230 (39.5)	1,230 (43.5)

A6-829-012146A

NOTE: ( ) Boom angles are in degrees.
*This capacity is based upon maximum boom angle.
#LMI operating code. Refer to LMI manual for instructions.

1. All capacities above the bold line are based on structural strength of boom extension.
2. 35 ft. boom extension length may be used for single line lifting service only.
3. Radii listed are for a fully extended boom with the boom extension erected. For main boom lengths less than fully extended, the rated loads are determined by boom angle. Use only the column which corresponds to the boom extension length and offset for which the machine is configured. For boom angles not shown, use the rating of the next lower boom angle.

   WARNING: Operation of this machine with heavier loads than the capacities listed is strictly prohibited. Machine tipping with boom extension occurs rapidly and without advance warning.
4. Boom angle is the angle above or below horizontal of the longitudinal axis of the boom base section after lifting rated load.
5. Capacities listed are with outriggers fully extended and vertical jacks set only.
6. 35 FT. FIXED LENGTH BOOM EXTENSION WARNING: For main boom length greater than 85 ft. with 35 ft. boom extension in working position, the boom angle must not be less than 36.5° since loss of stability will occur causing a tipping condition. The boom angle is not restricted for main boom length equal to or less than 85 ft. This warning also applies for boom extension erection purposes.

RATED LIFTING CAPACITIES IN POUNDS WITH 35 FT. - 60 FT. TELE-OFFSETTABLE BOOM EXTENSION ON OUTRIGGERS FULLY EXTENDED - 360° WITHOUT COUNTERWEIGHT

Radius in Feet	35 ft. LENGTH		60 ft. LENGTH	
	#0821	**#0823**	**#0841**	**#0843**
	2° OFFSET	30° OFFSET	2° OFFSET	30° OFFSET
35	*12,900 (78)			
40	11,900 (75.5)		*6,700 (78)	
45	11,150 (73.5)		6,270 (77.5)	
50	10,450 (71.5)	7,500 (77)	5,860 (76)	
55	9,870 (69.5)	7,310 (74.5)	5,510 (74)	
60	9,340 (67.5)	7,150 (72.5)	5,180 (72.5)	
65	8,850 (65)	7,010 (70.5)	4,900 (70.5)	
70	8,300 (63)	6,880 (68)	4,630 (69)	4,000 (77)
75	6,930 (60.5)	6,760 (66)	4,400 (67)	3,680 (75)
80	5,760 (58.5)	5,760 (63.5)	4,180 (65)	3,500 (73.5)
85	4,750 (56)	4,750 (61)	3,980 (63.5)	3,350 (71.5)
90	3,860 (53.5)	3,860 (58.5)	3,800 (61.5)	3,280 (69.5)
95	3,090 (51)	3,090 (56)	3,630 (59.5)	3,220 (67)
100	2,400 (48.5)	2,400 (53)	3,470 (57.5)	3,160 (65)
105	1,790 (45.5)	1,790 (50)	3,300 (55)	3,100 (63)
110	1,240 (42.5)	1,240 (47)	2,720 (53)	2,720 (60.5)
115			2,200 (51)	2,200 (58)
120			1,730 (48.5)	1,730 (55.5)
125			1,290 (46)	1,290 (53)

NOTE: ( ) Boom angles are in degrees. A6-829-012147

*This capacity is based upon maximum boom angle.

#LMI operating code. Refer to LMI manual for instructions.

1. All capacities above the bold line are based on structural strength of boom extension.
2. 35 ft. and 60 ft. boom extension lengths may be used for single line lifting service only.
3. Radii listed are for a fully extended boom with the boom extension erected. For main boom lengths less than fully extended, the rated loads are determined by boom angle. Use only the column which corresponds to the boom extension length and offset for which the machine is configured. For boom angles not shown, use the rating of the next lower boom angle.

   WARNING: Operation of this machine with heavier loads than the capacities listed is strictly prohibited. Machine tipping with boom extension occurs rapidly and without advance warning.
4. Boom angle is the angle above or below horizontal of the longitudinal axis of the boom base section after lifting rated load.
5. Capacities listed are with outriggers fully extended and vertical jacks set only.
6. 35 FT. TELE OFFSETTABLE BOOM EXTENSION WARNING: For main boom length greater than 85 ft. with 35 ft. tele. boom extension in working position, the boom angle must not be less than 40° since loss of stability will occur causing a tipping condition. The boom angle is not restricted for main boom length equal to or less than 85 ft. This warning also applies for boom extension erection purposes.

   60 FT. TELE OFFSETTABLE BOOM EXTENSION WARNING: For main boom length greater than75 ft. with 60 ft. tele. boom extension in working position, the boom angle must not be less than 43.5° since loss of stability will occur causing a tipping condition. The boom angle is not restricted for main boom length equal to or less than 75 ft. This warning also applies for boom extension erection purposes.

RATED LIFTING CAPACITIES IN POUNDS WITHOUT COUNTERWEIGHT
37 FT. - 115 FT. BOOM

ON OUTRIGGERS 50% EXTENDED (17 FT. 4 IN. SPREAD) - 360°

Radius in Feet	#4801 Main Boom Length in Feet								
	37	45	55	*63	75	85	95	105	115
10	+110,000 (69)	86,600 (73)	75,550 (76.5)						
12	97,800 (65.5)	86,600 (70.5)	75,550 (74.5)	60,950 (76.5)					
15	77,900 (59.5)	71,850 (66)	65,800 (71)	60,950 (73.5)	44,100 (77)				
20	46,050 (49.5)	42,800 (58.5)	39,700 (65)	37,600 (68.5)	37,500 (73)	37,050 (75.5)	36,450 (77.5)		
25	31,200 (36.5)	28,900 (50)	26,750 (59)	25,350 (63.5)	25,900 (68.5)	26,050 (71.5)	26,000 (74)	25,800 (76)	@24,450 (78)
30		20,700 (40)	19,050 (52)	18,000 (58)	18,850 (64.5)	19,200 (68)	19,400 (71)	19,450 (73.5)	19,400 (75.5)
35		14,900 (26)	13,900 (44.5)	13,050 (52)	14,050 (60)	14,550 (64)	14,850 (67.5)	15,050 (70.5)	15,100 (72.5)
40			10,250 (35.5)	9,520 (46)	10,600 (55)	11,150 (60.5)	11,550 (64)	11,800 (67.5)	12,000 (70)
45			7,540 (23.5)	6,860 (38.5)	7,990 (50)	8,610 (56)	9,050 (60.5)	9,360 (64.5)	9,580 (67)
50				4,800 (29)	5,950 (44.5)	6,590 (51.5)	7,070 (57)	7,410 (61)	7,670 (64.5)
55				3,200 (13.5)	4,310 (38)	4,980 (47)	5,470 (53)	5,840 (57.5)	6,120 (61.5)
60					2,980 (30.5)	3,650 (42)	4,150 (49)	4,540 (54.5)	4,840 (58.5)
65					1,880 (20)	2,540 (36)	3,050 (44.5)	3,450 (50.5)	3,760 (55.5)
70						1,600 (29)	2,120 (39.5)	2,520 (46.5)	2,940 (52)
75							1,320 (34)	1,720 (42.5)	2,050 (48.5)
80								1,030 (38)	1,360 (45)
Minimum boom angle (deg.) for indicated length (no load)									41
Maximum boom length (ft.) at 0 deg. boom angle (no load)									75

NOTE: ( ) Boom angles are in degrees. A6-829-012154A

#LMI operating code. Refer to LMI manual for operating instructions.

+9 parts of line required to lift this capacity (using aux. boom nose). Refer to Operator's and Safety Handbook for reeving diagram.

*63 ft. boom length is with inner-mid extended and outer-mid and fly retracted.

@This capacity is based on maximum boom angle.

RATED LIFTING CAPACITIES IN POUNDS WITHOUT COUNTERWEIGHT
37 FT. - 115 FT. BOOM

ON OUTRIGGERS 0% EXTENDED (10 FT. 4 IN. SPREAD) - 360°

Radius in Feet	#8801								
	Main Boom Length in Feet								
	37	45	55	*63	75	85	95	105	115
10	60,400 (69)	55,000 (73)	49,600 (76.5)						
12	45,250 (65.5)	41,550 (70.5)	37,750 (74.5)	35,250 (76.5)					
15	31,750 (59.5)	29,200 (66)	26,650 (71)	24,950 (73.5)	25,050 (77)				
20	19,100 (49.5)	17,850 (58.5)	16,200 (65)	15,100 (68.5)	15,800 (73)	16,050 (75.5)	16,100 (77.5)		
25	11,700 (36.5)	11,500 (50)	10,200 (59)	9,400 (63.5)	10,300 (68.5)	10,800 (71.5)	11,050 (74)	11,200 (76)	@11,300 (78)
30		7,150 (40)	6,370 (52)	5,680 (58)	6,730 (64.5)	7,300 (68)	7,680 (71)	7,940 (73.5)	8,100 (75.5)
35		4,250 (26)	3,650 (44.5)	3,050 (52)	4,170 (60)	4,800 (64)	5,240 (67.5)	5,560 (70.5)	5,780 (72.5)
40			1,650 (35.5)	1,100 (46)	2,260 (55)	2,920 (60.5)	3,400 (64)	3,760 (67.5)	4,020 (70)
45						1,460 (56)	1,970 (60.5)	2,350 (64.5)	2,640 (67)
50								1,220 (61)	1,520 (64.5)
Minimum boom angle (deg.) for indicated length (no load)									63.5
Maximum boom length (ft.) at 0 deg. boom angle (no load)									45

NOTE: ( ) Boom angles are in degrees. A6-829-012155A

#LMI operating code. Refer to LMI manual for operating instructions.

*63 ft. boom length is with inner-mid extended and outer-mid and fly retracted.

@This capacity is based on maximum boom angle.

ZERO DEGREE BOOM ANGLE CHARTS

ON OUTRIGGERS WITHOUT COUNTERWEIGHT

ON OUTRIGGERS FULLY EXTENDED - 360°									
Boom Angle	Main Boom Length in Feet								
	37	45	55	*63	75	85	95	105	115
0°	24,400 (29.8)	17,750 (37.8)	12,200 (47.8)	8,520 (55.8)	5,590 (67.8)	3,950 (77.8)	2,730 (87.8)	1,800 (97.8)	1,070 (107.8)

ON OUTRIGGERS 50% EXTENDED (17'4" SPREAD) - 360°					
Boom Angle	Main Boom Length in Feet				
	37	45	55	*63	75
0°	21,850 (29.8)	12,550 (37.8)	6,290 (47.8)	3,080 (55.8)	1,450 (67.8)

ON OUTRIGGERS 0% EXTENDED (10'4" SPREAD) - 360°					
Boom Angle	Main Boom Length in Feet				
	37	45			
0°	7,470 (29.8)	3,020 (37.8)			

A6-829-012168

Note: ( ) Reference radii are in feet.

*63 ft. boom length is with inner-mid extended and outer-mid and fly retracted.

TIRE INFLATION - PSI (BAR)

SIZE (FRONT & REAR)	TRA CODE	LIFTING SERVICE , GENERAL TRAVEL AND EXTENDED TRAVEL
		STATIC, CREEP & 2.5 MPH (4.0 KPH)
MICHELIN 29.5R25 XHA*	—	75 (5.2)
29.5X25 (28)	E-3	65 (4.5) (SEE OPERATOR'S MANUAL FOR EXTENDED ROADING)