LOAD CHARTS
RT760E

METRIC
DIN / ISO / 75% STABILITY

230785

SERIAL NUMBER

Courtesy of Crane.Market

Courtesy of Crane.Market

TABLE OF CONTENTS

GENERAL NOTES 4
WEIGHT REDUCTIONS / LINE PULLS & REEVING INFO 5
LIFTING AREA DIAGRAMS 6
RANGE DIAGRAM 7

ON OUTRIGGERS FULLY EXTENDED
MAIN BOOM 8
EXTENSION 9

ON RUBBER 10-11

ON OUTRIGGERS 50% EXTENDED
MAIN BOOM 13
EXTENSION 14

ON OUTRIGGERS 0% EXTENDED
MAIN BOOM 15

TIRE INFLATION 16

Courtesy of Crane.Market

NOTES FOR LIFTING CAPACITIES

GENERAL:

1. Rated loads as shown on lift chart pertain to this machine as originally manufactured and equipped. Modifications to the machine or use of optional equipment other than that specified can result in a reduction of capacity.
2. Construction equipment can be hazardous if improperly operated or maintained. Operation and maintenance of this machine shall be in compliance with the information in the Operator's and Safety Handbook, Service Manual, and Parts Manual supplied with this machine. If these manuals are missing, order replacements from the manufacturer through the distributor.
3. The operator and other personnel associated with machine shall fully acquaint themselves with the latest National Safety Standards for cranes.

SETUP:

1. The machine shall be level and on a firm supporting surface. Depending on the nature of the supporting surface, it may be necessary to have structural supports under the outrigger floats or tires to spread the load to a larger bearing surface.
2. For outrigger operation, all outriggers shall be properly extended with tires raised free of crane weight before operating the boom or lifting loads.
3. When machine is equipped with center front stabilizer, the front stabilizer shall be set in accordance with instructions in Operator's & Safety Handbook.
4. When equipped with removable and/or extendible counterweight, the proper counterweight shall be installed and fully extended before and during operation.
5. Tires shall be inflated to the recommended pressure before lifting on rubber.
6. With certain boom and hoist tackle combinations, maximum capacities may not be obtainable with standard cable lengths.
7. Unless approved by the crane manufacturer, do not travel with boom extension or jib erected. Refer to Operator's and Safety Handbook for job-site travel information.

OPERATION:

1. Rated loads at rated radius shall not be exceeded. Do not attempt to tip the machine to determine allowable loads. For clamshell, grapple, magnet or concrete bucket operation, weight of component and load must not exceed 80% of rated lifting capacities.
2. All rated loads have been tested to and meet the requirements of SAE J1063 - Cantilevered Boom Crane Structures - Method of Test. The crane's stability was determined in compliance with ISO 4305-1991 and EN 13000-2004, and also complies with DIN 15019.2 (Test Load = 1.25P + 0.1A). Capacities also do not exceed 75% stability. 0.1A represents one tenth (0.10) of the total boom weight reduced to the boom point. Loads are also determined by SAE J765 - Crane Stability Test Code.
3. Rated loads include the weight of hookblock, slings and auxiliary lifting devices and their weights shall be subtracted from the listed rating to obtain the net load to be lifted. When more than the minimum parts of line needed to pick the load are used, the additional rope weight as measured from the lower sheaves of the main boom nose shall be considered part of the load to be lifted. When both the hook block and headache ball are reeved, the lifting device that is NOT in use, including the line as measured from the lower sheave(s) of the nose supporting the unused device shall be considered part of the load.
4. Load ratings are based on freely suspended loads. No attempt shall be made to move a load horizontally on the ground in any direction.
5. The maximum in-service wind speed is 32 km/h. It is recommended when wind velocity is above 32 km/h, rated loads and boom lengths shall be appropriately reduced. For machines not in-service, the main boom should be retracted and lowered with swing brake set in wind velocities over 48 km/h.
6. Rated loads are for lift crane service only.
7. Do not operate at a radius or boom length where capacities are not listed. At these positions, the machine may overturn without any load on the hook.
8. The maximum load which can be telescoped is not definable because of variations in loadings and crane maintenance, but it is safe to attempt retraction and extension of the boom within the limits of the capacity chart.
9. When the boom length or lift radius or both are between values listed, the smallest load shown at either the next larger radius or next longer or shorter boom length shall be used.
10. For safe operation, the user shall make due allowances for his particular job conditions, such as: soft or uneven ground, out of level conditions, high winds, side loads, pendulum action, jerking or sudden stopping of loads, experience of personnel, two machine (tandem) lifts, traveling with loads, electric wires, obstacles, hazardous conditions, etc. Side pull on boom or jib is extremely dangerous.
11. Regardless of counterweight and outrigger spread configuration, no deduct is required from the main boom charts for a stowed boom extension.
12. Never handle personnel with this machine unless the requirements of the applicable national, state, and local regulations and safety codes are met.
13. Keep load handling devices a minimum of 107 cm below boom head at all times.
14. The boom angle before loading should be greater than the loaded boom angle to account for deflection.
15. Capacities appearing above the bold line are based on structural strength and tipping should not be relied upon as a capacity limitation.
16. Capacities for the 10.8 m boom length shall be lifted with boom fully retracted. If boom is not fully retracted, capacities shall not exceed those shown for the 12.2 m boom length.
17. When operating in the "On Outriggers 50% Extended (5.3 m spread)" mode, the outrigger beam pins must be engaged. When operating in the "On Outriggers 0% Extended (3.2 m spread)" mode, the outrigger beams must be fully retracted. Failure to follow these precautions could result in structural damage or loss of stability of the machine.
18. Do not lift loads when boom is fully lowered. The Load Moment Indicator (LMI) senses pressure and will not provide warnings or lockout. The crane can become overloaded if lift cylinder(s) is fully retracted.
19. **WARNING:** Lifting with the 10.1 m extension base, with the 7.0 m extension fly either erected or folded along side of extension base, is strictly prohibited.
20. The maximum outrigger pad load is 38,330 kg.

DEFINITIONS:

1. Operating Radius: Horizontal distance from a projection of the axis of rotation to the supporting surface before loading to the center of the vertical hoist line or tackle with load applied.
2. Loaded Boom Angle (Shown in Parenthesis on Main Boom Capacity Chart): is the angle between the boom base section and the horizontal, after lifting the rated load at the rated radius with the rated boom length.
3. Working Area: Areas measured in a circular arc about the center line of rotation as shown on the working area diagram.
4. Freely Suspended Load: Load hanging free with no direct external force applied except by the lift cable.
5. Side Load: Horizontal force applied to the lifted load either on the ground or in the air.

Courtesy of Crane.Market

WEIGHT REDUCTIONS FOR LOAD HANDLING DEVICES

10.1 m - 17.1 m FOLDING BOOM EXTENSION	
*10.1 m Extension (Erected) -	2,304 kg
*17.1 m Extension (Erected) -	5,139 kg

*Reduction of main boom capacities

(no deduct required for stowed boom extension)

NOTE: All load handling devices and boom attachments are considered part of the load and suitable allowances MUST BE MADE for their combined weights. Weights are for Grove furnished equipment.

AUXILIARY BOOM NOSE	62 kg
HOOKBLOCKS and HEADACHE BALLS:	
55 MT, 5 Sheave	567 kg+
45 MT, 4 Sheave	454 kg+
45 MT, 3 Sheave	454 kg+
7.5 MT Headache Ball (non-swivel)	159 kg+
7.5 MT Headache Ball (swivel)	168 kg+

+Refer to rating plate for actual weight.

When lifting over boom extension, deduct total weight of all load handling devices reeved over main boom nose directly from boom extension capacity.

LINE PULLS AND REEVING INFORMATION

HOISTS	CABLE SPECS.	PERMISSIBLE LINE PULLS	NOMINAL CABLE LENGTH
Main	19 mm (3/4") 6x37 Class EIPS, IWRC Special Flexible Min. Breaking Str. 26 670 kg	7,620 kg	152 m
Main & Aux.	19 mm (3/4") 35x7 Class Rotation Resistant (non-rotating) Min. Breaking Strength 38 920 kg	7,620 kg	152 m

The approximate weight of 19 mm wire rope is .68 kg /.3048 m

HOIST PERFORMANCE

Wire Rope Layer	Hoist Line Pulls Two Speed Hoist		Drum Rope Capacity (m)	
	Low	High	Layer	Total
	Available kg*	Available kg*		
1	8,225	4,113	31	31
2	7,560	3,780	33	64
3	6,994	3,497	37	101
4	6,508	3,254	39	140
5	6,084	3,042	43	183
6	5,713	2,856	45	228

*Max. lifting capacity: 6x37 and 35x7 class = 7,620 kg

Courtesy of Crane.Market

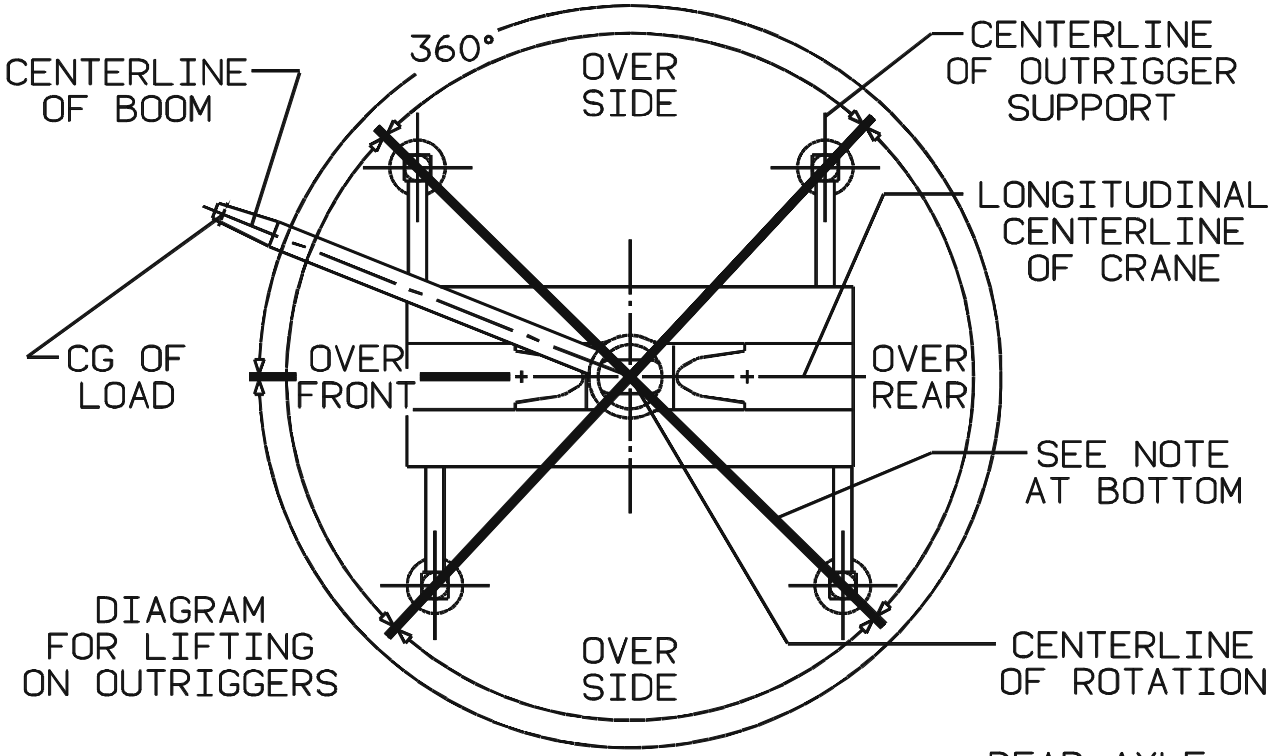

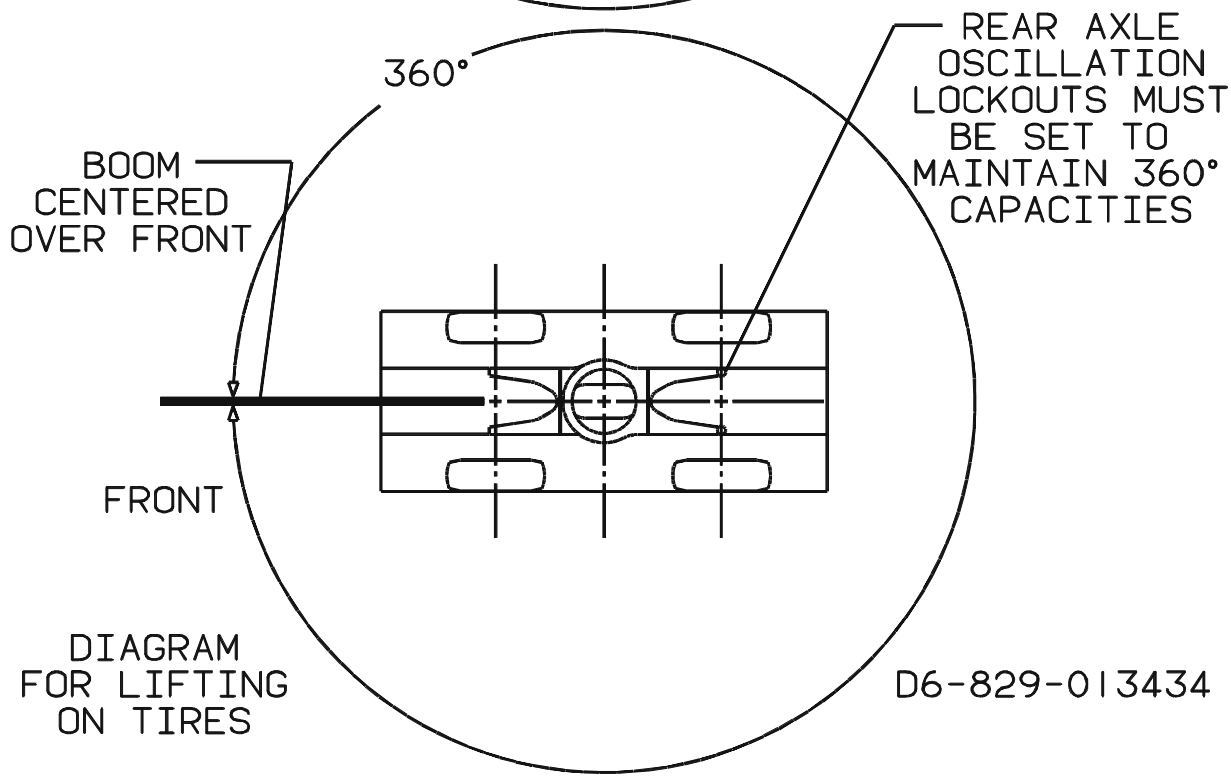

BOLD LINES DETERMINE THE LIMITING POSITION OF ANY LOAD FOR OPERATION WITHIN WORKING AREAS INDICATED

WORKING AREA DIAGRAM

Courtesy of Crane.Market

WORKING RANGE DIAGRAM
(BOOM DEFLECTION NOT SHOWN) D6-829-101148

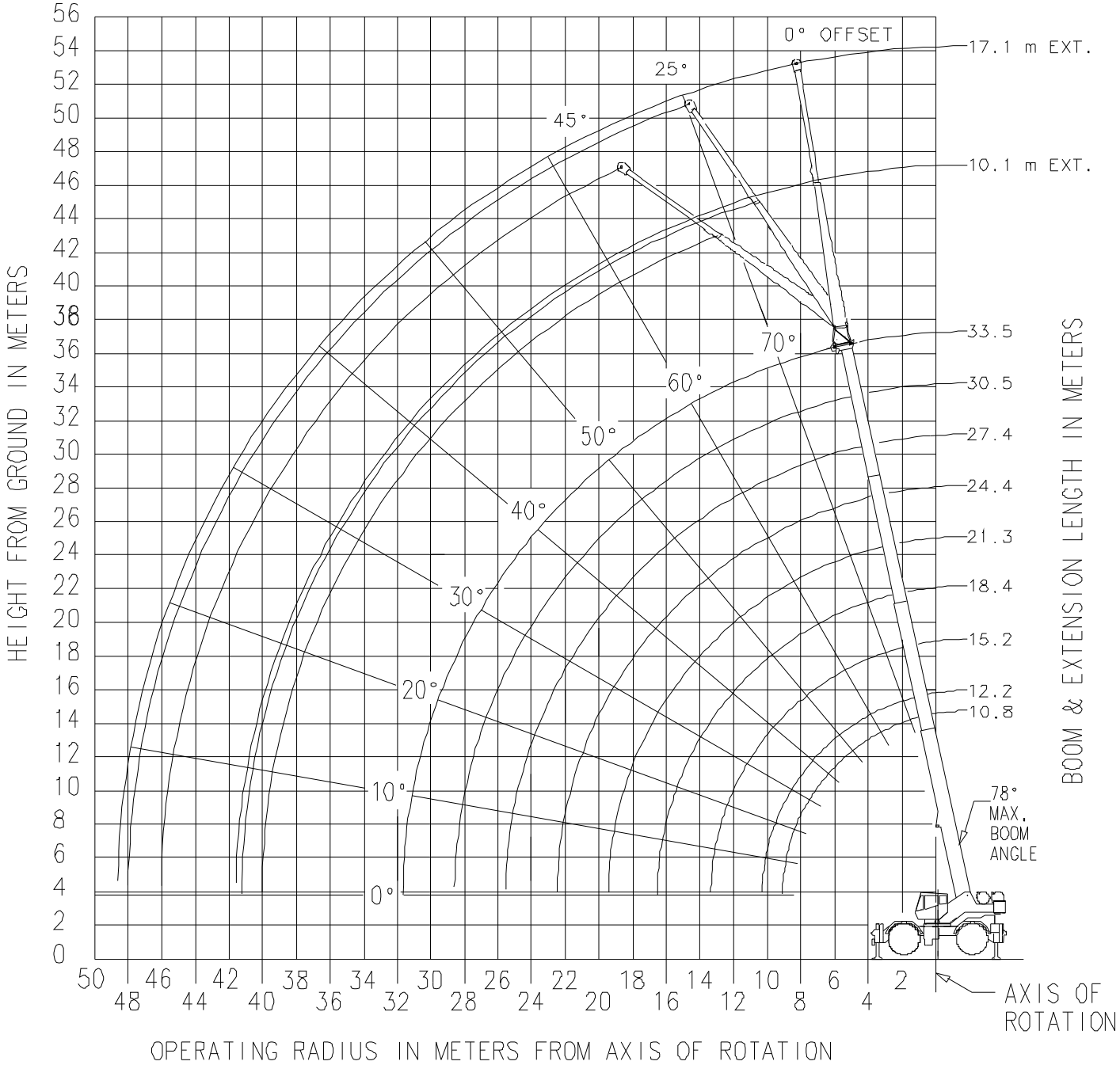

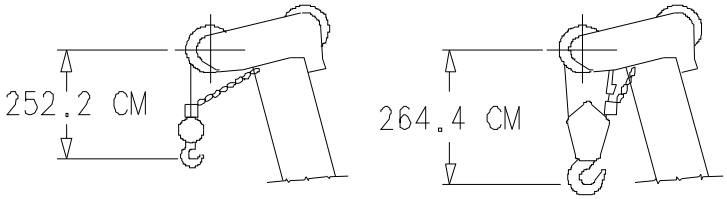

DIMENSIONS ARE FOR LARGEST GROVE FURNISHED HOOKBLOCK AND HEADACHE BALL, WITH ANTI-TWO BLOCK ACTIVATED.

Courtesy of Crane.Market

RATED LIFTING CAPACITIES IN KILOGRAMS
10.8 m - 33.5 m BOOM

ON OUTRIGGERS FULLY EXTENDED - 360°

Radius in Meters	#0001								
	Main Boom Length in Meters								
	10.8	12.2	15.2	**18.4	21.3	24.4	27.4	30.5	33.5
2.5	55,000 (72)								
3	50,000 (69)	38,275 (72)	36,375 (76)	*28,350 (78)					
3.5	46,100 (66.5)	38,275 (69.5)	36,375 (74)	28,350 (77.5)	*16,675 (78)				
4	42,200 (63.5)	37,975 (67)	35,525 (72)	28,075 (76)	16,675 (77.5)				
4.5	38,950 (60)	37,550 (64)	32,800 (70)	27,700 (74)	16,675 (76.5)	*16,675 (78)			
5	35,900 (57)	35,250 (61.5)	30,325 (68)	26,350 (72.5)	16,675 (75.5)	16,675 (77.5)	*14,050 (78)		
6	30,200 (50)	29,975 (55.5)	26,325 (64)	23,250 (69)	16,675 (72.5)	16,675 (75)	14,050 (77)	*13,200 (78)	
7	24,950 (42)	24,500 (49)	23,100 (59.5)	20,575 (65.5)	16,675 (69.5)	15,925 (72.5)	13,775 (75)	12,625 (77)	*10,875 (78)
8	20,650 (32)	20,600 (42)	20,400 (54.5)	18,325 (62)	16,300 (66.5)	14,850 (70)	13,075 (73)	11,925 (75)	10,650 (77)
9	13,650 (16)	17,250 (33)	17,200 (49.5)	16,425 (58.5)	15,275 (63.5)	13,350 (67.5)	11,675 (70.5)	11,075 (73)	10,050 (75)
10		13,700 (20.5)	14,400 (44)	14,400 (54.5)	13,950 (60.5)	12,125 (65)	10,675 (68.5)	10,350 (71)	9,465 (73)
12			10,075 (30)	10,225 (45.5)	10,550 (53.5)	10,150 (59.5)	9,275 (63.5)	8,775 (67)	8,475 (69.5)
14	See Note 16			7,600 (35)	7,910 (46)	8,115 (53.5)	7,920 (58.5)	7,735 (62.5)	7,735 (65.5)
16				5,765 (19.5)	6,055 (37.5)	6,290 (47)	6,525 (53.5)	6,825 (58)	6,825 (62)
18					4,580 (26)	4,945 (39.5)	5,270 (47.5)	5,485 (53.5)	5,625 (57.5)
20						3,870 (30.5)	4,255 (41)	4,440 (48)	4,590 (53.5)
22						3,000 (16.5)	3,435 (33.5)	3,580 (42.5)	3,720 (48.5)
24							2,745 (24)	2,890 (36)	3,025 (43.5)
26								2,320 (28)	2,450 (38)
28								1,830 (16)	1,970 (31)
30									1,555 (22.5)
0.1A (kg)	475	485	500	510	470	440	415	395	380
Minimum boom angle (°) for indicated length (no load)									0
Maximum boom length (m) at 0° boom angle (no load)									33.5

NOTE: ( ) Boom angles are in degrees.
#LMI operating code. Refer to LMI manual for operating instructions.
*This capacity is based on maximum boom angle.

Lifting Capacities at Zero Degree Boom Angle									
Boom Angle	Main Boom Length in Meters								
	10.8	12.2	15.2	**18.4	21.3	24.4	27.4	30.5	33.5
0°	13,175 (9.1)	11,075 (10.4)	7,730 (13.5)	5,210 (16.6)	3,640 (19.6)	2,770 (22.6)	2,255 (25.7)	1,675 (28.7)	1,230 (31.8)

NOTE: ( ) Reference radii in meters. 80026823
** Boom length is with inner-mid fully extended and outer-mid & fly fully retracted.

Courtesy of Crane.Market

10.1 m - 17.1 m FOLDING BOOM EXTENSION ON OUTRIGGERS FULLY EXTENDED - 360°

Radius in Meters	10.1 m LENGTH			17.1 m LENGTH		
	0° OFFSET	25° OFFSET	45° OFFSET	0° OFFSET	25° OFFSET	45° OFFSET
	#0021	**#0022**	**#0023**	**#0041**	**#0042**	**#0043**
9	*5,860 (78)					
10	5,860 (77)			*3,085 (78)		
12	5,860 (74.5)	*4,840 (78)		3,005 (77.5)		
14	5,855 (71.5)	4,650 (76.5)	*3,360 (78)	2,925 (76)		
16	5,260 (69)	4,355 (73.5)	3,215 (76)	2,850 (73.5)	*2,400 (78)	
18	4,615 (66)	3,935 (70.5)	3,100 (73)	2,775 (71.5)	2,340 (77)	
20	4,100 (63)	3,565 (67.5)	3,005 (70)	2,700 (69)	2,270 (74.5)	*1,750 (78)
22	3,710 (60.5)	3,250 (64.5)	2,920 (67)	2,625 (66.5)	2,205 (72)	1,690 (76.5)
24	3,310 (57)	2,980 (61)	2,800 (63.5)	2,555 (64)	2,090 (69.5)	1,620 (74)
26	2,750 (54)	2,740 (57.5)	2,610 (60)	2,425 (61.5)	2,020 (67.5)	1,560 (71)
28	2,280 (50)	2,705 (54)	2,435 (56)	2,195 (58.5)	1,920 (64.5)	1,525 (68)
30	1,880 (46.5)	2,090 (50.5)	2,170 (52)	2,000 (56)	1,770 (61.5)	1,480 (65)
32	1,540 (42.5)	1,710 (46.5)	1,760 (47.5)	1,755 (53)	1,640 (58.5)	1,460 (62)
34	1,235 (38.5)	1,380 (42)		1,450 (50)	1,520 (55.5)	1,425 (58.5)
36	950 (33.5)	1,090 (37)		1,180 (46.5)	1,410 (52)	1,350 (55)
38	690 (28)	830 (31)		950 (43)	1,180 (49)	1,260 (51)
40				735 (38.5)	935 (45)	
42				540 (34.5)	710 (40.5)	
44					500 (35)	
0.1A (kg)	370	340	325	350	325	295
Min. boom angle (°) for indicated length (no load)	20	25	45	25	28	45
Max. boom length (m) at 0° boom angle (no load)	30.5			27.4		

NOTE: ( ) Boom angles are in degrees. 80021735

#LMI operating code. Refer to LMI manual for operating instructions.
*This capacity is based upon maximum boom angle.

NOTES:

1. All capacities above the bold line are based on structural strength of boom extension.
2. 10.1 m and 17.1 m boom extension lengths may be used for single line lifting service.
3. Radii listed are for a fully extended boom with the boom extension erected. For main boom lengths less than fully extended, the rated loads are determined by boom angle. Use only the column which corresponds to the boom extension length and offset for which the machine is configured. For boom angles not shown, use the rating of the next lower boom angle. **WARNING**: Operation of this machine with heavier loads than the capacities listed is strictly prohibited. Machine tipping with boom extension occurs rapidly and without advance warning.
4. Boom angle is the angle above or below horizontal of the longitudinal axis of the boom base section after lifting rated load.
5. Capacities listed are with outriggers fully extended and vertical jacks set only.

Courtesy of Crane.Market

ON RUBBER CAPACITIES

STATIONARY CAPACITIES - 360°

Radius in Meters	#9005				
	Main Boom Length in Meters				
	10.8	12.2	15.2	**18.4	21.3
3	20,525 (69)	18,000 (72)			
3.5	18,925 (66.5)	18,000 (69.5)			
4	15,875 (63.5)	15,150 (67)	12,875 (72)		
4.5	12,875 (60)	12,450 (64)	11,725 (70)	9,480 (74)	
5	10,650 (57)	10,550 (61.5)	10,125 (68)	9,230 (72.5)	
6	7,655 (50)	7,570 (55.5)	7,340 (64)	6,950 (69)	6,960 (72.5)
7	5,685 (42)	5,625 (49)	5,440 (59.5)	5,180 (65.5)	5,180 (69.5)
8	4,300 (32)	4,255 (42)	4,105 (54.5)	3,900 (62)	3,935 (66.5)
9	3,260 (16)	3,235 (33)	3,115 (49.5)	2,935 (58.5)	2,985 (63.5)
10		2,450 (20.5)	2,350 (44)	2,195 (54.5)	2,240 (60.5)
12			1,245 (30)	1,125 (45.5)	1,160 (53.5)
Min. boom angle (°) for indicated length (no load)				32	37
Max. boom length (m) at 0° boom angle (no load)				15.2	

NOTE: ( ) Boom angles are in degrees.
#LMI operating code. Refer to LMI manual for operating instructions.

Lifting Capacities at Zero Degree Boom Angle On Rubber - 360°					
Boom Angle	Main Boom Length in Meters				
	10.8	12.2	15.2		
0°	3,190 (9.1)	2,160 (10.4)	655 (13.5)		

A6-829-104236A

NOTE: ( ) Reference radii in meters.
** Boom length is with inner-mid fully extended and outer-mid & fly fully retracted.

Courtesy of Crane.Market

ON RUBBER CAPACITIES (cont'd.)

PICK & CARRY CAPACITIES (UP TO 4.0 km/h) - BOOM CENTERED OVER FRONT (See note 6)

Radius in Meters	#9006				
	Main Boom Length in Meters				
	10.8	12.2	15.2	**18.4	21.3
3	19,275 (69)	17,050 (72)	13,925 (76)		
3.5	19,275 (66.5)	17,050 (69.5)	13,925 (74)		
4	18,425 (63.5)	17,050 (67)	13,925 (72)	10,000 (76)	
4.5	17,225 (60)	17,050 (64)	13,925 (70)	9,065 (74)	7,370 (76.5)
5	16,450 (57)	16,450 (61.5)	13,925 (68)	8,935 (72.5)	7,370 (75.5)
6	14,550 (50)	14,500 (55.5)	13,925 (64)	8,935 (69)	7,370 (72.5)
7	10,995 (42)	10,975 (49)	10,825 (59.5)	8,935 (65.5)	7,370 (69.5)
8	8,610 (32)	8,605 (42)	8,505 (54.5)	8,305 (62)	7,370 (66.5)
9	6,900 (16)	6,900 (33)	6,820 (49.5)	6,635 (58.5)	6,660 (63.5)
10		5,615 (20.5)	5,530 (44)	5,380 (54.5)	5,405 (60.5)
12			3,725 (30)	3,585 (45.5)	3,610 (53.5)
14				2,370 (35)	2,400 (46)
16				1,505 (19.5)	1,530 (37.5)
18					1,015 (26)
0.1A (kg)	475	485	500	510	470
Min. boom angle (°) for indicated length (no load)					0
Max. boom length (m) at 0° boom angle (no load)					21.3

NOTE: ( ) Boom angles are in degrees.
#LMI operating code. Refer to LMI manual for operating instructions.

Lifting Capacities at Zero Degree Boom Angle On Rubber - Pick & Carry					
Boom Angle	Main Boom Length in Meters				
	10.8	12.2	15.2	**18.4	21.3
0°	6,780 (9.1)	5,160 (10.4)	2,790 (13.5)	1,275 (16.6)	765 (19.6)

A6-829-101164A

NOTE: ( ) Reference radii in meters.
** Boom length is with inner-mid fully extended and outer-mid & fly fully retracted.

NOTES TO ALL RUBBER CAPACITY CHARTS:

1. Capacities are in kilograms. The crane's stability was determined in compliance with ISO 4305-1991 and EN13000-2004, and also complies with DIN 15019.2 and British Standard 1757:1986 Clause 9. Capacities also meet the requirements of 75% stability when stationary and 66 2/3% stability for pick and carry lifts on rubber.
2. Capacities are applicable to machines equipped with General/Titan 29.5x25 (28 or 34 ply), Denman Rock Plus and Denman Broadway bias ply tires at 4.5 bar cold inflation pressure.
3. Capacities appearing above the bold line are based on structural strength and tipping should not be relied upon as a capacity limitation.
4. Capacities are applicable only with machine on firm level surface.
5. On rubber lifting with boom extensions not permitted.
6. For pick and carry operation, boom must be centered over front of machine, mechanical swing lock engaged and load restrained from swinging. When handling loads in the structural range with capacities close to maximum ratings, travel should be reduced to creep speeds.
7. Axle lockouts must be functioning when lifting on rubber.
8. All lifting depends on proper tire inflation, capacity and condition. Capacities must be reduced for lower tire inflation pressures. See lifting capacity chart for tire used. Damaged tires are hazardous to safe operation of crane.
9. Creep - not over 61 m of movement in any 30 minute period and not exceeding 1.6 km/h.

Courtesy of Crane.Market

Courtesy of Crane.Market

RATED LIFTING CAPACITIES IN KILOGRAMS
10.8 m - 33.5 m BOOM

ON OUTRIGGERS 50% EXTENDED (5.3 m spread) - 360°

Radius in Meters	#4001								
	Main Boom Length in Meters								
	10.8	12.2	15.2	**18.4	21.3	24.4	27.4	30.5	33.5
3	49,425 (69)	38,275 (72)	36,375 (76)	*28,350 (78)					
3.5	45,350 (66.5)	38,275 (69.5)	36,375 (74)	28,350 (77.5)	*16,675 (78)				
4	41,400 (63.5)	37,850 (67)	35,525 (72)	28,075 (76)	16,675 (77.5)				
4.5	37,775 (60)	37,200 (64)	32,800 (70)	27,700 (74)	16,675 (76.5)	*16,675 (78)			
5	33,000 (57)	31,475 (61.5)	28,700 (68)	26,350 (72.5)	16,675 (75.5)	16,675 (77.5)	*14,050 (78)		
6	24,600 (50)	23,625 (55.5)	21,725 (64)	20,125 (69)	16,675 (72.5)	16,675 (75)	14,050 (77)	*13,200 (78)	
7	18,775 (42)	17,925 (49)	17,175 (59.5)	16,000 (65.5)	15,750 (69.5)	15,450 (72.5)	13,775 (75)	12,625 (77)	*10,875 (78)
8	14,650 (32)	13,800 (42)	13,725 (54.5)	13,050 (62)	12,975 (66.5)	12,825 (70)	12,600 (73)	11,925 (75)	10,650 (77)
9	11,650 (16)	10,950 (33)	10,950 (49.5)	10,825 (58.5)	10,875 (63.5)	10,800 (67.5)	10,700 (70.5)	10,550 (73)	10,050 (75)
10		8,870 (20.5)	8,955 (44)	9,005 (54.5)	9,230 (60.5)	9,245 (65)	9,200 (68.5)	9,115 (71)	9,005 (73)
12			6,220 (30)	6,335 (45.5)	6,645 (53.5)	6,925 (59.5)	6,960 (63.5)	6,960 (67)	6,925 (69.5)
14	See Note 16			4,465 (35)	4,840 (46)	5,180 (53.5)	5,385 (58.5)	5,425 (62.5)	5,440 (65.5)
16				3,080 (19.5)	3,525 (37.5)	3,845 (47)	4,155 (53.5)	4,285 (58)	4,325 (62)
18					2,545 (26)	2,855 (39.5)	3,155 (47.5)	3,310 (53.5)	3,460 (57.5)
20						2,095 (30.5)	2,380 (41)	2,525 (48)	2,670 (53.5)
22						1,470 (16.5)	1,755 (33.5)	1,905 (42.5)	2,040 (48.5)
24							1,235 (24)	1,400 (36)	1,530 (43.5)
26								980 (28)	1,105 (38)
28								615 (16)	750 (31)
0.1A (kg)	475	485	500	510	470	440	415	395	380
Minimum boom angle (°) for indicated length (no load)									0
Maximum boom length (m) at 0° boom angle (no load)									33.5

NOTE: ( ) Boom angles are in degrees.
#LMI operating code. Refer to LMI manual for operating instructions.
*This capacity is based on maximum boom angle.

Lifting Capacities at Zero Degree Boom Angle									
Boom Angle	Main Boom Length in Meters								
	10.8	12.2	15.2	**18.4	21.3	24.4	27.4		
0°	11,475 (9.1)	8,130 (10.4)	4,725 (13.5)	2,700 (16.6)	1,885 (19.6)	1,295 (22.6)	855 (25.7)		

NOTE: ( ) Reference radii in meters. 80021733
** Boom length is with inner-mid fully extended and outer-mid & fly fully retracted.

Courtesy of Crane.Market

10.1 m - 17.1 m FOLDING BOOM EXTENSION
ON OUTRIGGERS 50% EXTENDED (5.3 m spread) - 360°

Radius in Meters	10.1 m LENGTH			17.1 m LENGTH		
	0° OFFSET	25° OFFSET	45° OFFSET	0° OFFSET	25° OFFSET	45° OFFSET
	#4021	**#4022**	**#4023**	**#4041**	**#4042**	**#4043**
9	*5,860 (78)					
10	5,860 (77)			*3,085 (78)		
12	5,860 (74.5)	*4,840 (78)		3,005 (77.5)		
14	5,205 (71.5)	4,650 (76.5)	*3,360 (78)	2,925 (76)		
16	4,180 (69)	4,355 (73.5)	3,215 (76)	2,850 (73.5)	*2,400 (78)	
18	3,380 (66)	3,930 (70.5)	3,100 (73)	2,775 (71.5)	2,340 (77)	
20	2,730 (63)	3,210 (67.5)	3,005 (70)	2,700 (69)	2,270 (74.5)	*1,750 (78)
22	2,200 (60.5)	2,620 (64.5)	2,850 (67)	2,290 (66.5)	2,205 (72)	1,690 (76.5)
24	1,750 (57)	2,095 (61)	2,260 (63.5)	1,855 (64)	2,090 (69.5)	1,620 (74)
26	1,365 (54)	1,640 (57.5)	1,775 (60)	1,490 (61.5)	2,020 (67.5)	1,560 (71)
28	1,020 (50)	1,260 (54)	1,365 (56)	1,170 (58.5)	1,685 (64.5)	1,525 (68)
30	730 (46.5)	930 (50.5)	1,010 (52)	895 (56)	1,335 (61.5)	1,480 (65)
32	475 (42.5)	645 (46.5)	695 (47.5)	650 (53)	1,030 (58.5)	1,210 (62)
34					760 (55.5)	905 (58.5)
36					520 (52)	630 (55)
0.1A (kg)	370	340	325	350	325	295
Min. boom angle (°) for indicated length (no load)	30	31	45	39	40	45
Max. boom length (m) at 0° boom angle (no load)	27.4			24.4		

NOTE: ( ) Boom angles are in degrees. A6-829-101296

#LMI operating code. Refer to LMI manual for operating instructions.
*This capacity is based upon maximum boom angle.

NOTES:

1. All capacities above the bold line are based on structural strength of boom extension.
2. 10.1 m and 17.1 m boom extension lengths may be used for single line lifting service.
3. Radii listed are for a fully extended boom with the boom extension erected. For main boom lengths less than fully extended, the rated loads are determined by boom angle. Use only the column which corresponds to the boom extension length and offset for which the machine is configured. For boom angles not shown, use the rating of the next lower boom angle. **WARNING:** Operation of this machine with heavier loads than the capacities listed is strictly prohibited. Machine tipping with boom extension occurs rapidly and without advance warning.
4. Boom angle is the angle above or below horizontal of the longitudinal axis of the boom base section after lifting rated load.
5. Capacities listed are with outriggers properly extended and vertical jacks set only.

Courtesy of Crane.Market

RATED LIFTING CAPACITIES IN KILOGRAMS
10.8 m - 33.5 m BOOM

ON OUTRIGGERS 0% EXTENDED (3.2 m spread) - 360°

Radius in Meters	#8001								
	Main Boom Length in Meters								
	10.8	12.2	15.2	**18.4	21.3	24.4	27.4	30.5	33.5
3	33,500 (69)	31,700 (72)	28,275 (76)	*25,425 (78)					
3.5	27,075 (66.5)	25,725 (69.5)	23,200 (74)	21,050 (77.5)	*16,675 (78)				
4	22,475 (63.5)	21,475 (67)	19,500 (72)	17,800 (76)	16,675 (77.5)				
4.5	19,025 (60)	18,275 (64)	16,650 (70)	15,275 (74)	14,875 (76.5)	*14,400 (78)			
5	16,350 (57)	15,725 (61.5)	14,425 (68)	13,275 (72.5)	13,025 (75.5)	12,675 (77.5)	*12,300 (78)		
6	12,225 (50)	11,575 (55.5)	11,125 (64)	10,275 (69)	10,200 (72.5)	10,050 (75)	9,870 (77)	*9,645 (78)	
7	9,355 (42)	8,670 (49)	8,545 (59.5)	8,135 (65.5)	8,190 (69.5)	8,155 (72.5)	8,065 (75)	7,940 (77)	*7,795 (78)
8	7,375 (32)	6,665 (42)	6,610 (54.5)	6,485 (62)	6,660 (66.5)	6,700 (70)	6,680 (73)	6,620 (75)	6,535 (77)
9	5,865 (16)	5,160 (33)	5,150 (49.5)	5,145 (58.5)	5,440 (63.5)	5,555 (67.5)	5,585 (70.5)	5,570 (73)	5,530 (75)
10		3,935 (20.5)	4,000 (44)	4,040 (54.5)	4,405 (60.5)	4,625 (65)	4,695 (68.5)	4,715 (71)	4,705 (73)
12			2,370 (30)	2,470 (45.5)	2,800 (53.5)	3,135 (59.5)	3,320 (63.5)	3,405 (67)	3,440 (69.5)
14				1,410 (35)	1,715 (46)	2,030 (53.5)	2,305 (58.5)	2,420 (62.5)	2,505 (65.5)
16				615 (19.5)	930 (37.5)	1,230 (47)	1,520 (53.5)	1,670 (58)	1,770 (62)
18						625 (39.5)	900 (47.5)	1,045 (53.5)	1,190 (57.5)
20								555 (48)	690 (53.5)
0.1A (kg)	475	485	500	510	470	440	415	395	380
Minimum boom angle (°) for indicated length (no load)						15	28	34	40
Maximum boom length (m) at 0° boom angle (no load)						21.3			

NOTE: ( ) Boom angles are in degrees.
#LMI operating code. Refer to LMI manual for operating instructions.
*This capacity is based on maximum boom angle.

Lifting Capacities at Zero Degree Boom Angle									
Boom Angle	Main Boom Length in Meters								
	10.8	12.2	15.2						
0°	5,765 (9.1)	3,480 (10.4)	1,470 (13.5)						

NOTE: ( ) Reference radii in meters. 80021734
** Boom length is with inner-mid fully extended and outer-mid & fly fully retracted.

Courtesy of Crane.Market

TIRE INFLATION - PSI (BAR)		
SIZE (FRONT & REAR)	TRA CODE	LIFTING SERVICE , GENERAL TRAVEL AND EXTENDED TRAVEL
		STATIC, CREEP & 2.5 MPH (4.0 km/h)
MICHELIN 29.5R25 XHA★	——	75 (5.2)
29.5x25 (28 or 34) General/Titan, Denman Broadway / Rock Plus	E-3	65 (4.5) (See operator's manual for extended roading.)

Courtesy of Crane.Market