Grove GMK3055

Product Guide

Features

- 9,7 m – 43 m (32 ft – 141 ft) 6-section full power boom
- Patented TWIN-LOCK™ boom pinning system
- 8,7 m –15 m (28.5 ft – 49.2 ft) bi-fold lattice swingaway, hydraulic luffing or manual offset
- 11 600 kg (25,500 lb) counterweight with hydraulic removal system
- 260 kW (349 hp) Mercedes OM501LA 6 cylinder turbo-charged diesel engine. ZF, AS Tronic transmission
- MEGATRAK™ independent hydro-pneumatic suspension

Courtesy of Crane.Market

Features

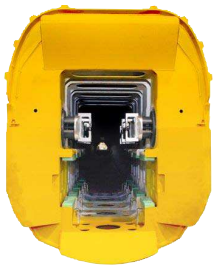

TWIN-LOCK™

Boom pinning mechanism automatically pins the sections in position using two horizontal pins.

ECOS

Electronic Crane Operating System - ECOS enables control of the entire crane's principle operations. Simple programming eases lift planning and a supply of essential information allows full concentration on the lift itself.

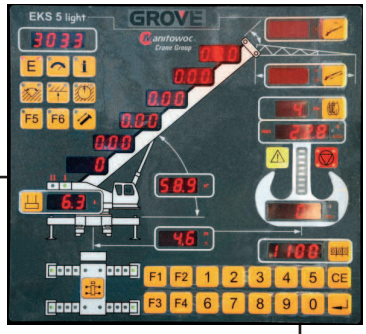

EKS 5 Light

Monitoring the lifting condition of the crane at all times EKS works together with, but independently of the ECOS as a complete command and control system or separately as a load moment indicator.

MEGATRAK™

The MEGATRAK™ suspension system is the best off road driveline available on the market today. The system's versatility and performance allows the GMK3055 to operate as a true all-terrain crane. The MEGATRAK™ independent suspension and all-wheel steer system allows wheels to remain on the ground at all times so stresses and weight are not continually transferred between axles. MEGATRAK™ provides true ground clearance where others just raise the chassis.

Other benefits of the MEGATRAK™ system are:

- A reliable suspension system
- Excellent job site maneuverability with all-wheel steering
- Commonality among almost all models
- A driveline that remains aligned at all times
- A steering linkage system that is protected against damage
- Constant tire contact for equal tire wear
- Reduced maintenance

Courtesy of Crane.Market

Contents

Specifications	4
Dimensions	7
Weight proposals	8
Working range (main boom)	9
Load charts (main boom)	10
Working range (with swingaway)	13
Load charts (manual offsettable swingaway)	14
Load charts (hydraulic offsettable swingaway)	18

Courtesy of Crane.Market

Specifications

Superstructure

Boom

9,7 m – 43 m (32 ft – 141 ft) six section, full power boom with patented TWIN-LOCK™ boom pinning system. Maximum tip height: 45,8 m (150 ft).

Boom nose

Five nylatron sheaves, mounted on heavy duty tapered roller bearings with removable pin-type rope guards. Quick reeve boom nose. Removable auxiliary boom nose with removable pin type rope guard.

Boom elevation

Single lift cylinder with safety valve provides boom angle from -2.7° to +82.8°.

Hydraulically offsettable lattice extension

8,7 m – 15 m (28.5 ft – 49.2 ft) bi-fold lattice swingaway extension hydraulically offsettable and luffing under load: 0° – 40°. Controlled from the crane cab.

Maximum tip height: 60,7 m (199 ft)

*Offsettable lattice extension

8,7 m – 15 m (28.5 ft – 49.2 ft) bi-fold lattice swingaway extension manually offset: 0°, 20° or 40°.

Maximum tip height: 60,7 m (199 ft)

Load moment and anti-two block system

Load moment and anti-two block system with audio/visual warning and control lever lockout provides electronic display of boom angle, length, radius, tip height, relative load moment, maximum permissible load, load indication and warning of impending two-block condition.

Cab

All aluminum construction cab with acoustical lining, tinted safety glass, adjustable operator's seat, sliding windows in side and cab rear, hinged front window with wiper, sunvisor and window shade. Other features include diesel heater/defroster, armrest integrated crane controls, and ergonomically arranged instrumentation.

Crane control system

Full electronic control of all crane movements using electrical control levers with automatic reset to zero. Controls are integrated with the LMI and engine management system by CAN-BUS. ECOS system with graphic display.

Swing

Axial piston fixed displacement motor and planetary gear box. Infinitely variable to 2.5 rpm. Holding and service brake.

Counterweight

11 600 kg (25,500 lb) consisting of 6600 kg (14,500 lb) bolted to the turntable, 1 X 2000 kg (4409 lb) and 3 X 1000 kg (2204 lb) sections with hydraulic installation/removal system. Controlled from the superstructure cab.

Hydraulic system

2 separate circuits, 1 axial piston variable displacement pump (load sensing) with electronic power limiting control and 1 gear pump for swing.

Dual thermostatically controlled oil coolers keep oil at optimum operating temperature.

Tank capacity: 600 L (159 gal)

Hoist

Main and auxiliary hoist are powered by axial piston motor with planetary gear and brake. "Thumb-thumper" hoist drum rotation indicator alerts operator of hoist movement.

	Main	Auxiliary
Line length:	170 m (558 ft)	170 m (558 ft)
Rope diameter:	16 mm	16 mm
Line speed:	120 m/min (394 fpm)	120 m/min (394 fpm)
Line pull:	50 kN (11,240 lb)	50 kN (11,240 lb)

Denotes optional equipment

Courtesy of Crane.Market

Superstructure – continued

*Optional equipment

- Windspeed indicator
- Worklights mounted on base section
- Aircraft warning lights
- Hook blocks/headache ball
- Retractable cab foot walk
- Additional spotlight on superstructure cab
- Radio/CD player for superstructure cab
- Air conditioning – combined system for both cabs
- EKS 5 with graphic display in lieu of standard EKS 5 light
- Additional strobe light for superstructure
- Working range limiter
- Wireless remote control for all crane functions (Hetronic)
- Automatic centralized lubrication for superstructure
- 360˚ positive swing lock (NYC requirement)

Carrier

Chassis

Box type, torsion resistant frame is fabricated from high strength steel.

Outrigger system

Four hydraulic single stage outrigger beams with vertical cylinders and outrigger pads, 500 mm (19.7 in) square. Outriggers can be set in 3 positions:

Full 6,2 m (20.3 ft)
Partial 4,4 m (14.4 ft)
Retracted 2,3 m (7.6 ft)

Independent horizontal and vertical movement controlled from each side of carrier and the superstructure cab. Electronic crane level indicators.

Engine

Mercedes-Benz OM 501 LA six cylinder, water cooled, turbo-charged, with 260 kW (349 bhp) @ 1800 rpm. Max. torque 1730 Nm (1276 ft/lb) @ 1080 rpm. Compression and exhaust brakes.

Engine emissions: EUROMOT/EPA/CARB (off road)

Fuel tank capacity

300 L (79 gallons).

Transmission

ZF, AS Tronic, 12 speeds forward, 2 reverse.

Drive/steer

6x4x6

Axles

1st axle line – steer (optional drive)

2nd axle line – drive/steer

3rd axle line – drive/steer (connects for all wheel steer)

Drive axles with planetary hub reduction and center mounted gearing. Inter-axle and cross axle differential locks.

Suspension

Grove's exclusive MEGATRAK™ suspension. Independent hydro-pneumatic system acting on all wheels with hydraulic lockout. Suspension can be raised 170 mm (6.7 in) or lowered 130 mm (5.1 in) both longitudinally and transversely. Features an automatic leveling system for highway travel.

Tires

6 tires, 16.00R25

Steering

Dual circuit, hydraulic power assisted steering system. Transfer case mounted, ground driven emergency steering pump. Axles 1 and 2 steer on highway. Separate steering of the 3rd axle for all wheel and crab steering, controlled by an electric rocker switch.

Brakes

Service brakes: pneumatic dual circuit acting on all wheels.

Parking brake: pneumatically operated spring loaded brake acting on axle lines 1 and 3.

Air dryer.

Denotes optional equipment

Courtesy of Crane.Market

Specifications

Carrier – continued

Cab

Two-man, aluminum construction with the following features: safety glass, driver and passenger seats with pneumatic suspension, engine-dependent hot water heater, complete instrumentation and driving controls. Cab tilts forward for easy engine access.

Electrical system

24V system with three phase alternator, 28V/100A
2 batteries, 12V/170 Ah

Maximum speed

80 km/h (50 mph) 14.00 tires
85 km/h (53 mph) 16.00/20.5 tires

Gradeability (theoretical)

82% - 14.00 tires
72% - 16.00/20.5 tires

Miscellaneous standard equipment

Work light; tool kit; fire extinguisher; auxiliary boom nose; radio/CD player in carrier cab, heated rear view mirrors, and cruise control.

*Optional equipment

- Stainless steel exhaust system with spark arrestor
- Air conditioning – combined system for both cabs
- 14.00R25 tires (vehicle width 2,55 m (8.4 ft)
- 20.5R25 tires (vehicle width 2,85 m (9.4 ft)
- 6x6x6 drive/steer
- Electric driveline retarder
- Engine independent diesel cab heater, with engine pre-heater
- Strobe light
- Worklights for outriggers
- Data logger
- Spare tire and wheel with carry bracket
- Engine shut down valve
- Outrigger pad load indicator
- Trailer hitch

**Denotes optional equipment*

Courtesy of Crane.Market

Dimensions

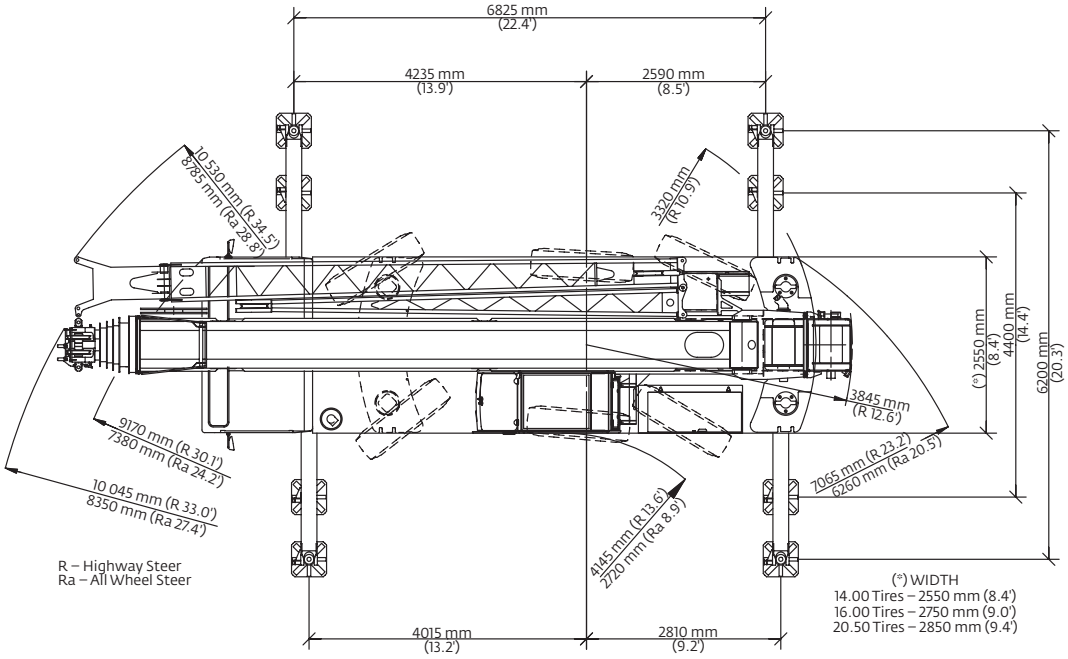

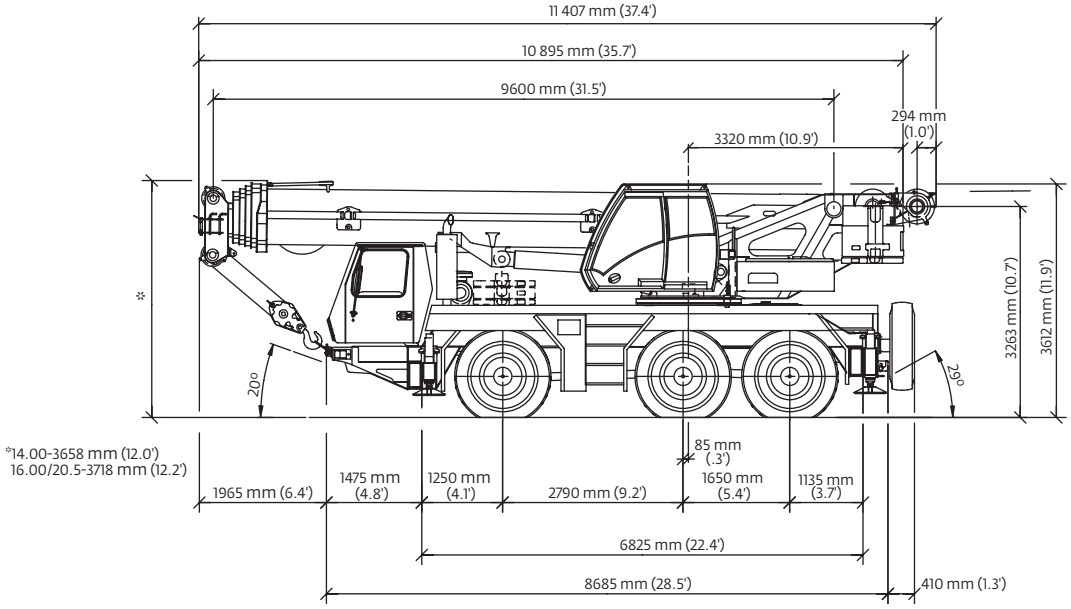

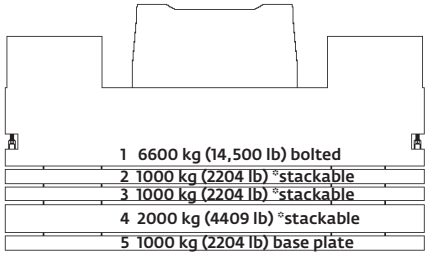

Counterweight configuration	1	2	3	4	5
6600 kg (14,500 lb)	●				
7600 kg (16,700 lb)	●				●
8600 kg (18,900 lb)	●	●			●
9600 kg (21,100 lb)	●	●	●		●
10 600 kg (23,300 lb)	●	●		●	●
11 600 kg (25,500 lb)	●	●	●	●	●

Load chart configuration – 360°

Counterweight	25,500 lb	23,300 lb	21,100 lb	18,900 lb	16,700 lb	14,500 lb
Main boom	✖ ■	✖ ■	✖ ■	✖ ■ ●	✖ ■ ● □ ○	✖ ■ ● □ ○
28.5' swingaway	✖ ■	✖ ■	✖ ■	✖ ■	✖ ■	✖ ■
49.2' swingaway	✖ ■	✖ ■	✖ ■	✖ ■	✖ ■	✖ ■

Outrigger span 20.3' = ✖ 14.4' = ■ 7.6' = ●
Rubber P&C = □ 360° = ○

Courtesy of Crane.Market

Weight proposals

Boom over front

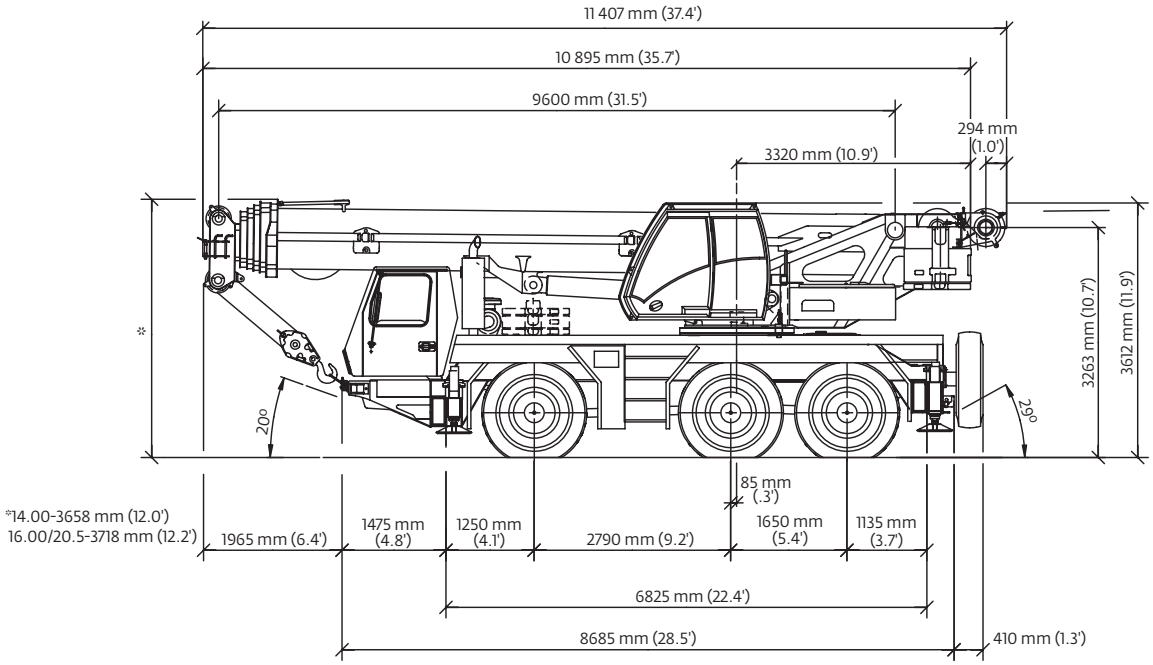

Boom over front

Basic weights - kg (lb)	Axle 1		Axles 2 and 3		Total	
Mercedes power, 28.5' – 49.2' hydraulic offset swingaway including brackets and hose reel, 16.00R25 tires, 6x4x6 drive/steer, 2nd oil cooler, outrigger pads, auxiliary hoist, 6600 kg (14,550 lb) counterweight fixed to superstructure, driver and tanks filled.	11 517	(25,391)	23 957	(52,815)	35 474	(78,206)
Additions:						
6x6x6 drive/steer	339	(748)	21	(46)	360	(794)
Electric driveline retarder	-17	(-37)	187	(412)	170	(375)
Spare wheel 14.00 R25 XGC steel rim with stowage	-179	(-394)	444	(979)	265	(584)
Spare wheel 16.00 R25 XGC steel rim with stowage	-218	(-482)	539	(1189)	321	(708)
Spare wheel 20.5 R25 XGC steel rim with stowage	-252	(-557)	620	(1368)	368	(811)
1000 kg (2200 lb) counterweight slab clamped to superstructure	-616	(-1359)	1656	(3651)	1040	(2293)
2000 kg (4400 lb) counterweight slab clamped to superstructure	-1227	(-2704)	3297	(7268)	2070	(4564)
1000 kg (2200 lb) counterweight slab on carrier deck (base plate)	1042	(2297)	-2	(-4)	1040	(2293)
2000 kg (4400 lb) counterweight slab on carrier deck	2074	(4572)	-4	(-9)	2070	(4564)
Substitutions:						
14.00R25 tires	133	(292)	265	(585)	-398	(877)
20.5R25 tires	94	(207)	188	(414)	282	(622)
Removals:						
Brackets for hydraulic swingaway	-71	(-157)	11	(24)	-60	(-132)
Hose reel for hydraulic swingaway	-120	(-265)	55	(122)	-65	(-143)
10 m – 17 m (33 ft – 56 ft) hydraulic swingaway	-1019	(-2247)	134	(296)	-885	(-1951)
Auxiliary boom nose	-128	(-283)	68	(151)	-60	(-132)
Outrigger floats front	-97	(-214)	25	(55)	-72	(-159)
Outrigger floats rear	38	(84)	-108	(-238)	-70	(-154)

THIS CHART IS ONLY A GUIDE AND SHOULD NOT BE USED TO OPERATE THE CRANE.
The individual crane's load chart, operating instructions and other instructional plates must be read and understood prior to operating the crane.

Courtesy of Crane.Market

Working range

32 ft – 141 ft main boom

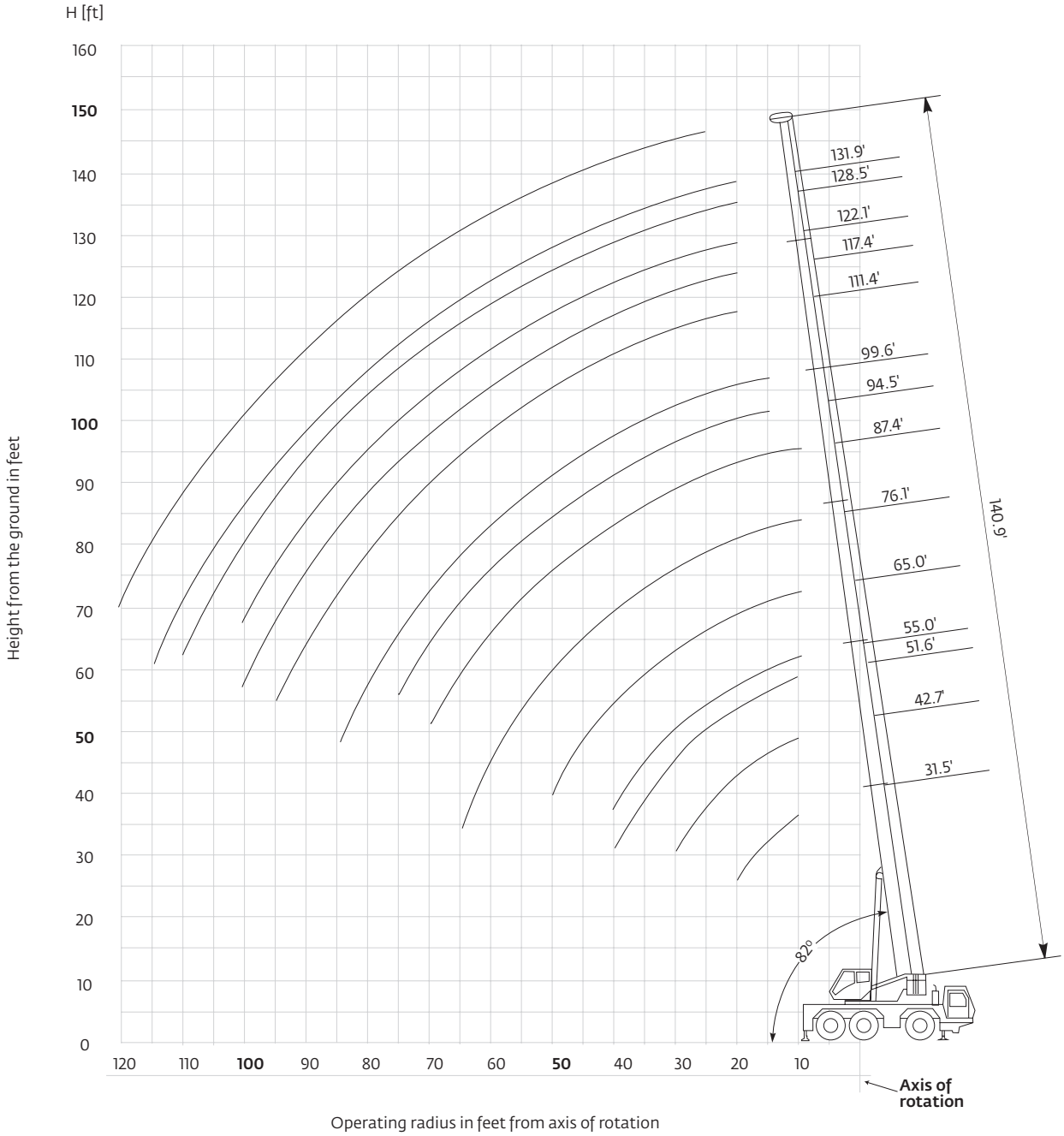

	Hook block	H
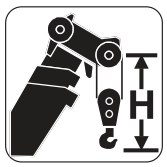	55 USt, 5 sheave quick-reeving	3300 mm (10.8 ft)
	35 USt, 3 sheave quick-reeving	3200 mm (10.5 ft)
	15 USt,1 sheave quick-reeving	3100 mm (10.2 ft)
	5 USt single headache ball	2700 mm (8.9 ft)

Tip heights shown in the working range diagram do not consider loaded boom deflection.

THIS CHART IS ONLY A GUIDE AND SHOULD NOT BE USED TO OPERATE THE CRANE.
The individual crane's load chart, operating instructions and other instructional plates must be read and understood prior to operating the crane.

Courtesy of Crane.Market

Load charts

Main boom

9,6 m – 43 m (32 ft – 141 ft) | **11 600 kg (25,500 lb)** | **22.4 ft x 20.3 ft 100%** | **360°**

Pounds x 1000

Feet	32	43	51 – 55	65.0	72 – 78	87 – 95	99 – 112	117 – 123	128 – 132	141
*8	120.0	–	–	–	–	–	–	–	–	–
10	103.0	97.0	91.0	87.0	74.0	54.0	–	–	–	–
15	79.0	77.0	74.0	71.0	64.0	47.0	42.0	–	–	–
20	60.0	61.0	60.0	58.0	54.0	41.0	36.8	26.2	20.8	–
25	–	47.0	46.0	43.0	42.2	36.2	32.0	25.6	20.8	17.6
30	–	36.6	35.6	35.0	32.8	32.2	27.2	23.6	20.8	17.6
35	–	–	29.6	28.4	26.6	26.6	23.4	21.2	19.2	17.6
40	–	–	23.8	23.6	23.8	22.2	20.8	19.2	17.8	16.4
45	–	–	–	19.6	20.2	18.8	17.6	16.8	16.4	15.2
50	–	–	–	17.4	17.2	16.2	15.0	14.4	14.6	14.2
55	–	–	–	–	14.8	14.0	13.0	12.4	12.6	12.8
60	–	–	–	–	12.8	12.2	11.2	10.8	11.0	11.2
65	–	–	–	–	11.2	10.4	9.8	9.4	9.8	9.8
70	–	–	–	–	–	9.0	8.4	8.4	9.2	8.6
75	–	–	–	–	–	7.4	7.2	7.8	8.4	7.6
80	–	–	–	–	–	–	6.2	7.2	7.6	6.8
85	–	–	–	–	–	–	5.2	6.6	6.8	6.0
90	–	–	–	–	–	–	4.4	6.2	6.0	5.2
95	–	–	–	–	–	–	3.8	5.4	5.2	4.6
100	–	–	–	–	–	–	–	4.8	4.6	4.0
105	–	–	–	–	–	–	–	–	4.0	3.6
110	–	–	–	–	–	–	–	–	3.6	3.0
115	–	–	–	–	–	–	–	–	2.2	2.6
120	–	–	–	–	–	–	–	–	–	2.2

*Over rear

9,6 m – 43 m (32 ft – 141 ft) | **10 600 kg (23,300 lb)** | **22.4 ft x 20.3 ft 100%** | **360°**

Pounds x 1000

Feet	32	43	51 – 55	65.0	72 – 78	87 – 95	99 – 112	117 – 123	128 – 132	141
10	103.0	97.0	91.0	87.0	74.0	54.0	–	–	–	–
15	79.0	77.0	74.0	71.0	64.0	47.0	42.0	–	–	–
20	59.0	60.0	59.0	56.0	54.0	41.0	36.8	26.2	20.8	–
25	–	47.0	44.0	41.2	40.4	36.2	32.0	25.6	20.8	17.6
30	–	35.0	35.4	33.6	31.4	31.2	27.2	23.6	20.8	17.6
35	–	–	28.4	27.2	26.4	25.4	23.4	21.2	19.2	17.6
40	–	–	22.8	22.4	22.6	21.2	19.8	18.8	17.8	16.4
45	–	–	–	19.0	19.2	18.0	16.6	16.0	16.0	15.2
50	–	–	–	16.8	16.4	15.4	14.2	13.6	13.8	13.8
55	–	–	–	–	14.0	13.4	12.2	11.8	12.4	12.0
60	–	–	–	–	12.2	11.4	10.4	10.2	11.0	10.4
65	–	–	–	–	10.4	9.8	9.0	9.0	9.8	9.2
70	–	–	–	–	–	8.4	7.8	8.4	8.8	8.0
75	–	–	–	–	–	7.4	6.6	7.8	7.8	7.0
80	–	–	–	–	–	–	5.6	7.2	7.0	6.2
85	–	–	–	–	–	–	4.8	6.6	6.2	5.4
90	–	–	–	–	–	–	4.0	5.8	5.4	4.8
95	–	–	–	–	–	–	3.4	5.0	4.8	4.2
100	–	–	–	–	–	–	–	4.4	4.2	3.6
105	–	–	–	–	–	–	–	–	3.6	3.2
110	–	–	–	–	–	–	–	–	3.2	2.6
115	–	–	–	–	–	–	–	–	1.8	2.2
120	–	–	–	–	–	–	–	–	–	1.8

THIS CHART IS ONLY A GUIDE AND SHOULD NOT BE USED TO OPERATE THE CRANE.
The individual crane's load chart, operating instructions and other instructional plates must be read and understood prior to operating the crane.

Courtesy of Crane.Market

9,6 m – 43 m (32 ft – 141 ft) | **9600 kg (21,100 lb)** | **22.4 ft x 20.3 ft 100%** | **360°**

Pounds x 1000

Feet	32	43	51 – 55	65.0	72 – 78	87 – 95	99 – 112	117 – 123	128 – 132	141
10	103.0	97.0	91.0	87.0	74.0	54.0	–	–	–	–
15	79.0	77.0	74.0	71.0	64.0	47.0	42.0	–	–	–
20	59.0	59.0	57.0	54.0	52.0	41.0	36.8	26.2	20.8	–
25	–	45.0	42.2	41.2	38.6	36.2	32.0	25.6	20.8	17.6
30	–	33.8	33.8	32.0	30.0	29.8	27.2	23.6	20.8	17.6
35	–	–	27.0	25.8	26.0	24.2	22.6	21.2	19.2	17.6
40	–	–	21.6	21.4	21.6	20.2	18.8	17.8	17.8	16.4
45	–	–	–	17.6	18.4	17.0	15.8	15.0	15.2	15.2
50	–	–	–	16.0	15.6	14.6	13.4	12.8	13.6	13.0
55	–	–	–	–	13.2	12.4	11.4	11.4	12.2	11.2
60	–	–	–	–	11.4	10.8	9.8	10.2	10.6	9.8
65	–	–	–	–	9.8	9.2	8.4	9.0	9.4	8.6
70	–	–	–	–	–	8.0	7.2	8.4	8.2	7.4
75	–	–	–	–	–	7.4	6.0	7.8	7.2	6.4
80	–	–	–	–	–	–	5.2	6.8	6.4	5.6
85	–	–	–	–	–	–	4.2	6.0	5.8	5.0
90	–	–	–	–	–	–	3.6	5.2	5.0	4.4
95	–	–	–	–	–	–	2.8	4.6	4.4	3.8
100	–	–	–	–	–	–	–	4.0	3.8	3.2
105	–	–	–	–	–	–	–	–	3.2	2.8
110	–	–	–	–	–	–	–	–	2.8	2.2
115	–	–	–	–	–	–	–	–	1.4	1.8
120	–	–	–	–	–	–	–	–	–	1.4

9,6 m – 43 m (32 ft – 141 ft) | **8600 kg (18,900 lb)** | **22.4 ft x 20.3 ft 100%** | **360°**

Pounds x 1000

Feet	32	43	51 – 55	65.0	72 – 78	87 – 95	99 – 112	117 – 123	128 – 132	141
10	103.0	97.0	91.0	87.0	74.0	54.0	–	–	–	–
15	78.0	77.0	74.0	71.0	64.0	47.0	42.0	–	–	–
20	58.0	58.0	55.0	51.0	49.0	41.0	36.8	26.2	20.8	–
25	–	42.8	40.6	39.4	36.8	36.2	32.0	25.6	20.8	17.6
30	–	32.4	32.2	30.4	29.6	28.4	26.4	23.6	20.8	17.6
35	–	–	25.8	24.6	24.6	23.0	21.4	20.2	19.2	17.6
40	–	–	20.6	20.8	20.6	19.0	17.6	16.8	16.8	16.4
45	–	–	–	18.0	17.4	16.0	14.8	14.2	15.0	14.2
50	–	–	–	15.2	14.8	13.6	12.4	12.6	13.2	12.2
55	–	–	–	–	12.4	11.6	10.6	11.4	11.4	10.4
60	–	–	–	–	10.6	10.0	9.0	10.2	10.0	9.0
65	–	–	–	–	9.2	8.8	7.6	9.0	8.6	7.8
70	–	–	–	–	–	8.0	6.6	8.0	7.6	6.8
75	–	–	–	–	–	7.4	5.4	7.2	6.8	6.0
80	–	–	–	–	–	–	4.6	6.4	6.0	5.2
85	–	–	–	–	–	–	3.8	5.6	5.2	4.4
90	–	–	–	–	–	–	3.0	4.8	4.6	3.8
95	–	–	–	–	–	–	2.4	4.2	4.0	3.4
100	–	–	–	–	–	–	–	3.6	3.4	2.8
105	–	–	–	–	–	–	–	–	2.8	2.4
110	–	–	–	–	–	–	–	–	2.4	1.8
115	–	–	–	–	–	–	–	–	–	1.4

THIS CHART IS ONLY A GUIDE AND SHOULD NOT BE USED TO OPERATE THE CRANE.
The individual crane's load chart, operating instructions and other instructional plates must be read and understood prior to operating the crane.

Courtesy of Crane.Market

Load charts

Main boom

9,6 m – 43 m (32 ft – 141 ft) | **7600 kg (16,700 lb)** | **22.4 ft x 20.3 ft 100%** | **360°**

Pounds x 1000

Feet	32	43	51 – 55	65.0	72 – 78	87 – 95	99 – 112	117 – 123	128 – 132	141
10	102.0	97.0	91.0	87.0	74.0	54.0	–	–	–	–
15	78.0	77.0	74.0	71.0	64.0	47.0	42.0	–	–	–
20	57.0	57.0	53.0	49.0	47.0	41.0	36.8	26.2	20.8	–
25	–	40.8	39.8	37.6	35.0	34.4	32.0	25.6	20.8	17.6
30	–	30.6	30.6	29.0	28.8	27.0	25.0	23.6	20.8	17.6
35	–	–	24.4	23.4	23.4	21.8	20.2	19.2	19.0	17.6
40	–	–	19.4	20.6	19.4	18.0	16.6	15.8	16.4	15.8
45	–	–	–	17.0	16.4	15.0	13.8	14.2	14.4	13.4
50	–	–	–	14.2	13.8	12.6	11.6	12.6	12.4	11.4
55	–	–	–	–	11.6	10.8	9.8	11.2	10.6	9.8
60	–	–	–	–	10.0	9.4	8.2	9.8	9.2	8.4
65	–	–	–	–	8.4	8.8	7.0	8.6	8.0	7.2
70	–	–	–	–	–	8.0	6.0	7.4	7.0	6.2
75	–	–	–	–	–	7.2	5.0	6.6	6.2	5.4
80	–	–	–	–	–	–	4.0	5.8	5.4	4.6
85	–	–	–	–	–	–	3.2	5.0	4.6	4.0
90	–	–	–	–	–	–	2.6	4.4	4.0	3.4
95	–	–	–	–	–	–	2.0	3.8	3.4	2.8
100	–	–	–	–	–	–	–	3.2	3.0	2.4
105	–	–	–	–	–	–	–	–	2.4	2.0
110	–	–	–	–	–	–	–	–	2.0	1.6
115	–	–	–	–	–	–	–	–	–	–
120	–	–	–	–	–	–	–	–	–	–

9,6 m – 43 m (32 ft – 141 ft) | **6600 kg (14,500 lb)** | **22.4 ft x 20.3 ft 100%** | **360°**

Pounds x 1000

Feet	32	43	51 – 55	65.0	72 – 78	87 – 95	99 – 112	117 – 123	128 – 132	141
10	102.0	97.0	91.0	87.0	74.0	54.0	–	–	–	–
15	78.0	77.0	74.0	71.0	64.0	47.0	42.0	–	–	–
20	56.0	54.0	50.0	49.0	45.0	41.0	36.8	26.2	20.8	–
25	–	38.6	37.8	35.6	33.6	32.8	30.4	25.6	20.8	17.6
30	–	29.0	29.0	27.4	27.4	25.6	23.6	22.2	20.8	17.6
35	–	–	23.0	23.4	22.2	20.6	19.0	18.0	17.8	17.6
40	–	–	18.2	19.4	18.2	16.8	15.4	15.8	16.0	14.8
45	–	–	–	16.0	15.2	14.0	12.8	14.2	13.4	12.4
50	–	–	–	13.2	13.0	11.8	10.6	12.0	11.4	10.6
55	–	–	–	–	10.8	10.6	8.8	10.4	9.8	9.0
60	–	–	–	–	9.2	9.4	7.4	9.0	8.6	7.6
65	–	–	–	–	7.8	8.8	6.2	7.8	7.4	6.6
70	–	–	–	–	–	7.6	5.4	6.8	6.4	5.6
75	–	–	–	–	–	6.6	4.4	6.0	5.6	4.8
80	–	–	–	–	–	–	3.6	5.2	4.8	4.0
85	–	–	–		–	–	2.8	4.6	4.2	3.4
90	–	–	–	–	–	–	2.2	3.8	3.6	2.8
95	–	–	–	–	–	–	1.6	3.4	3.0	2.4
100	–	–	–	–	–	–	–	2.8	2.6	2.0
105	–	–	–	–	–	–	–	–	2.2	1.6
110	–	–	–	–	–	–	–	–	1.8	–
115	–	–	–	–	–	–	–	–	–	–
120	–	–	–	–	–	–	–	–	–	–

THIS CHART IS ONLY A GUIDE AND SHOULD NOT BE USED TO OPERATE THE CRANE.
The individual crane's load chart, operating instructions and other instructional plates must be read and understood prior to operating the crane.

Courtesy of Crane.Market

Working range

32 ft – 141 ft main boom with 28.5 ft and 49.2 ft swingaway

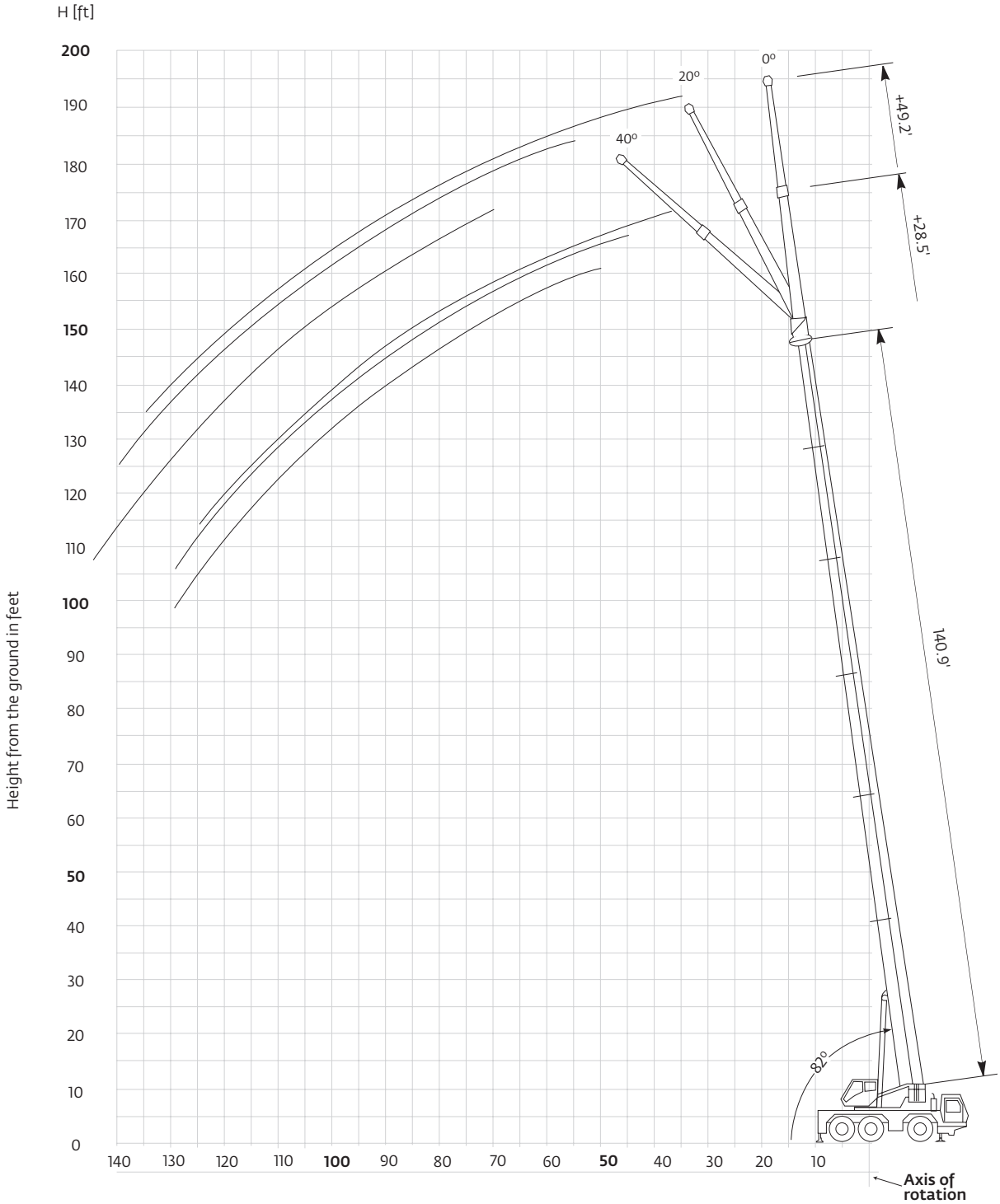

Tip heights shown in the working range diagram do not consider loaded boom deflection.

THIS CHART IS ONLY A GUIDE AND SHOULD NOT BE USED TO OPERATE THE CRANE.
The individual crane's load chart, operating instructions and other instructional plates must be read and understood prior to operating the crane.

Courtesy of Crane.Market

Load charts

Manual offsettable swingaway

43 m (141 ft)	8,7 m (28.5 ft) Manual offset	11 600 kg (25,500 lb)	22.4 ft x 20.3 ft 100%	360˚

Feet	Pounds x 1000									
	28.5 ft length									
	0º Offset					40º Offset				
	87.4	99.6	117.4	128.5	140.9	87.4	99.6	117.4	128.5	140.9
20.0	17.4	17.0	–	–	–	–	–	–	–	–
25.0	16.0	16.0	12.4	–	–	–	–	–	–	–
30.0	14.6	15.0	12.4	9.2		–	–	–	–	–
35.0	13.6	14.0	12.0	9.2	9.4	8.0	–	–	–	–
40.0	12.6	13.2	11.0	9.2	9.4	7.8	7.8	–	–	–
45.0	11.4	12.4	10.0	9.2	9.4	7.6	7.6	7.6	–	–
50.0	10.4	11.6	9.0	9.2	9.4	7.4	7.6	7.4	7.4	7.4
55.0	10.0	10.8	8.4	8.6	8.8	7.2	7.4	7.4	7.4	7.4
60.0	9.4	10.2	7.8	8.0	8.2	7.2	7.2	7.2	7.2	7.2
65.0	8.8	9.4	7.2	7.6	7.8	7.0	7.2	6.8	7.0	7.2
70.0	8.4	8.6	6.8	7.0	7.4	7.0	7.0	6.4	6.6	6.8
75.0	8.0	7.6	6.4	6.6	7.0	7.0	7.0	6.2	6.4	6.6
80.0	7.6	6.8	6.0	6.4	6.2	7.0	7.0	5.8	6.0	6.2
85.0	6.8	6.0	5.6	6.0	5.6	7.0	6.6	5.6	5.8	6.0
90.0	6.0	5.2	5.2	5.6	4.8	6.2	5.6	5.2	5.6	5.6
95.0	5.2	4.4	4.8	5.0	4.2	5.4	4.8	5.0	5.2	4.8
100.0	4.6	3.8	4.4	4.4	3.8	–	4.2	4.6	5.0	4.2
105.0	–	3.2	4.2	4.0	3.2	–	3.4	4.4	4.4	3.8
110.0	–	2.8	3.8	3.4	2.8	–	2.8	4.0	3.8	3.2
115.0	–	–	3.4	3.0	2.4	–	–	3.6	3.4	2.8
120.0	–	–	3.0	2.6	2.0	–	–	3.0	2.8	2.4
125.0	–	–	2.6	2.2	1.6	–	–	–	2.4	2.0
130.0	–	–	2.2	1.8	–	–	–	–	2.0	1.4
135.0	–	–	–	1.6	–	–	–	–	1.6	–

THIS CHART IS ONLY A GUIDE AND SHOULD NOT BE USED TO OPERATE THE CRANE.
The individual crane's load chart, operating instructions and other instructional plates must be read and understood prior to operating the crane.

Courtesy of Crane.Market

Load charts
Manual offsettable swingaway

43 m (141 ft)	15 m (49.2 ft) Manual offset	11 600 kg (25,500 lb)	22.4 ft x 20.3 ft 100%	360°

Feet	Pounds x 1000									
	49.2 ft length									
	0° Offset					40° Offset				
	87.4	99.6	117.4	128.5	140.9	87.4	99.6	117.4	128.5	140.9
20.0	9.2	–	–	–	–	–	–	–	–	–
25.0	8.8	8.4	–	–	–	–	–	–	–	–
30.0	8.4	8.2	6.6	5.8	–	–	–	–	–	–
35.0	7.8	7.8	6.6	5.8	5.6	–	–	–	–	–
40.0	7.2	7.4	6.4	5.8	5.6	–	–	–	–	–
45.0	6.8	7.0	6.4	5.8	5.6	–	–	–	–	–
50.0	6.2	6.4	6.2	5.8	5.6	4.0	–	–	–	–
55.0	6.0	6.2	6.0	5.8	5.6	4.0	4.0	–	–	–
60.0	5.6	5.8	5.8	5.8	5.4	3.8	3.8	3.8	–	–
65.0	5.2	5.6	5.4	5.6	5.4	3.8	3.8	3.8	–	–
70.0	5.0	5.2	5.2	5.4	5.4	3.6	3.8	3.8	3.8	3.8
75.0	4.8	5.0	5.0	5.2	5.2	3.6	3.6	3.6	3.6	3.6
80.0	4.6	4.8	4.8	5.0	5.0	3.6	3.6	3.6	3.6	3.6
85.0	4.4	4.6	4.6	4.8	4.8	3.4	3.6	3.6	3.6	3.6
90.0	4.2	4.4	4.4	4.6	4.6	3.4	3.4	3.4	3.4	3.6
95.0	4.0	4.2	4.2	4.4	4.6	3.4	3.4	3.4	3.4	3.4
100.0	3.8	4.0	4.0	4.2	4.0	3.4	3.4	3.4	3.4	3.4
105.0	3.8	4.0	3.8	4.0	3.6	3.4	3.4	3.4	3.4	3.4
110.0	3.6	3.4	3.6	3.8	3.2	3.4	3.4	3.4	3.4	3.4
115.0	3.6	3.0	3.4	3.4	2.8	3.4	3.4	3.4	3.4	3.4
120.0	3.4	2.6	3.2	3.0	2.4	–	3.0	3.2	3.4	3.2
125.0	–	2.2	3.0	2.6	2.0	–	2.6	3.2	3.2	2.8
130.0	–	1.8	2.6	2.2	1.6	–	2.0	3.0	2.8	2.4
135.0	–	–	–	2.0	1.4	–	–	–	2.4	2.0
140.0	–	–	–	1.6	–	–	–	–	2.0	1.6
145.0	–	–	–	1.4	–	–	–	–	1.6	1.4
150.0	–	–	–	–	–	–	–	–	1.4	–

THIS CHART IS ONLY A GUIDE AND SHOULD NOT BE USED TO OPERATE THE CRANE.
The individual crane's load chart, operating instructions and other instructional plates must be read and understood prior to operating the crane.

Courtesy of Crane.Market

Load charts

Manual offsettable swingaway

43 m (141 ft)	8,7 m (28.5 ft) Manual offset	7600 kg (16,700 lb)	22.4 ft x 20.3 ft 100%	360˚

Feet	Pounds x 1000									
	28.5 ft length									
	0º Offset					40º Offset				
	87.4	99.6	117.4	128.5	140.9	87.4	99.6	117.4	128.5	140.9
20.0	17.4	17.0	–	–	–	–	–	–	–	–
25.0	16.0	16.0	12.4	–	–	–	–	–	–	–
30.0	14.6	15.0	12.4	9.2	–	–	–	–	–	–
35.0	13.6	14.0	12.0	9.2	9.4	8.0	–	–	–	–
40.0	12.6	13.2	11.0	9.2	9.4	7.8	7.8	–	–	–
45.0	11.4	12.4	10.0	9.2	9.4	7.6	7.6	7.6	–	–
50.0	10.4	11.6	9.0	9.2	9.4	7.4	7.6	7.4	7.4	7.4
55.0	10.0	9.8	8.4	8.6	8.8	7.2	7.4	7.4	7.4	7.4
60.0	9.4	8.4	7.8	8.0	7.8	7.2	7.2	7.2	7.2	7.2
65.0	8.4	7.2	7.2	7.6	6.6	7.0	7.2	6.8	7.0	7.2
70.0	7.2	6.2	6.8	6.6	5.8	7.0	7.0	6.4	6.6	6.8
75.0	6.4	5.4	6.2	5.6	5.0	7.0	6.2	6.2	6.4	5.8
80.0	5.6	4.6	5.4	5.0	4.2	6.0	5.2	5.8	5.8	5.0
85.0	4.8	3.8	4.8	4.2	3.6	5.2	4.4	5.4	5.0	4.4
90.0	4.0	3.2	4.2	3.8	3.0	4.4	3.8	4.8	4.4	3.6
95.0	3.4	2.6	3.6	3.2	2.4	3.6	3.0	4.2	3.8	3.2
100.0	3.0	2.2	3.2	2.8	2.0	–	2.4	3.6	3.2	2.6
105.0	–	1.6	2.8	2.4	1.6	–	1.8	3.0	2.8	2.2
110.0	–	–	2.4	2.0	–	–	1.2	2.6	2.2	1.6
115.0	–	–	2.0	1.6	–	–	–	2.2	1.8	–
120.0	–	–	1.6	–	–	–	–	1.8	1.4	–

THIS CHART IS ONLY A GUIDE AND SHOULD NOT BE USED TO OPERATE THE CRANE.
The individual crane's load chart, operating instructions and other instructional plates must be read and understood prior to operating the crane.

Courtesy of Crane.Market

Load charts
Manual offsettable swingaway

43 m (141 ft)	15 m (49.2 ft) Manual offset	7600 kg (16,700 lb)	22.4 ft x 20.3 ft 100%	360˚

Feet	Pounds x 1000									
	49.2 ft length									
	0º Offset					40º Offset				
	87.4	99.6	117.4	128.5	140.9	87.4	99.6	117.4	128.5	140.9
20.0	9.2	–	–	–	–	–	–	–	–	–
25.0	8.8	8.4	–	–	–	–	–	–	–	–
30.0	8.4	8.2	6.6	5.8	–	–	–	–	–	–
35.0	7.8	7.8	6.6	5.8	5.6	–	–	–	–	–
40.0	7.2	7.4	6.4	5.8	5.6	–	–	–	–	–
45.0	6.8	7.0	6.4	5.8	5.6	–	–	–	–	–
50.0	6.2	6.4	6.2	5.8	5.6	4.0	–	–	–	–
55.0	6.0	6.2	6.0	5.8	5.6	4.0	4.0	–	–	–
60.0	5.6	5.8	5.8	5.8	5.4	3.8	3.8	3.8	–	–
65.0	5.2	5.6	5.4	5.6	5.4	3.8	3.8	3.8	–	–
70.0	5.0	5.2	5.2	5.4	5.4	3.6	3.8	3.8	3.8	3.8
75.0	4.8	5.0	5.0	5.2	5.2	3.6	3.6	3.6	3.6	3.6
80.0	4.6	4.8	4.8	5.0	4.6	3.6	3.6	3.6	3.6	3.6
85.0	4.4	4.4	4.6	4.6	4.0	3.4	3.6	3.6	3.6	3.6
90.0	4.2	3.8	4.4	4.0	3.4	3.4	3.4	3.4	3.4	3.6
95.0	4.0	3.4	4.0	3.6	2.8	3.4	3.4	3.4	3.4	3.4
100.0	3.6	2.8	3.6	3.0	2.4	3.4	3.4	3.4	3.4	3.4
105.0	3.2	2.4	3.2	2.6	2.0	3.4	3.2	3.4	3.4	3.0
110.0	2.8	2.0	2.8	2.2	1.6	3.2	2.8	3.4	3.2	2.6
115.0	2.4	1.6	2.4	2.0	–	2.6	2.2	3.0	2.8	2.2
120.0	2.0	–	2.0	1.6	–	–	1.6	2.6	2.4	1.8
125.0	–	–	1.8	1.4	–	–	–	2.2	2.0	1.4
130.0	–	–	1.4	–	–	–	–	1.8	1.6	–

THIS CHART IS ONLY A GUIDE AND SHOULD NOT BE USED TO OPERATE THE CRANE.
The individual crane's load chart, operating instructions and other instructional plates must be read and understood prior to operating the crane.

Courtesy of Crane.Market

Load charts

Hydraulic offsettable swingaway

43 m (141 ft)	8,7 m (28.5 ft) Hydraulic luffing	11 600 kg (25,500 lb)	22.4 ft x 20.3 ft 100%	360˚

Feet	Pounds x 1000									
	28.5 ft length									
	0º Offset					20º – 40º Offset (intermediate angle)				
	87.4	99.6	117.4	128.5	140.9	87.4	99.6	117.4	128.5	140.9
20.0	17.4	17.0	–	–	–	–	–	–	–	–
25.0	16.0	16.0	12.4	–	–	–	–	–	–	–
30.0	14.6	15.0	12.4	9.2	–	–	–	–	–	–
35.0	13.6	14.0	12.0	9.2	9.4	8.0	–	–	–	–
40.0	12.6	13.2	11.0	9.2	9.4	7.8	7.8	–	–	–
45.0	11.4	12.4	10.0	9.2	9.4	7.6	7.6	7.6	–	–
50.0	10.4	11.6	9.0	9.2	9.4	7.4	7.6	7.4	7.4	7.4
55.0	10.0	10.8	8.4	8.6	8.8	7.2	7.4	7.4	7.4	7.4
60.0	9.4	10.2	7.8	8.0	8.2	7.2	7.2	7.2	7.2	7.2
65.0	8.8	9.4	7.2	7.6	7.8	7.0	7.2	6.8	7.0	7.2
70.0	8.4	8.6	6.8	7.0	7.4	7.0	7.0	6.4	6.6	6.8
75.0	8.0	7.6	6.4	6.6	7.0	7.0	7.0	6.2	6.4	6.6
80.0	7.6	6.8	6.0	6.4	6.2	7.0	7.0	5.8	6.0	6.2
85.0	6.8	6.0	5.6	6.0	5.6	7.0	6.4	5.6	5.8	6.0
90.0	6.0	5.2	5.2	5.6	4.8	6.2	5.6	5.2	5.6	5.2
95.0	5.2	4.4	4.8	5.0	4.2	5.4	4.8	5.0	5.2	4.6
100.0	4.6	3.8	4.4	4.4	3.8	–	4.0	4.6	4.0	4.6
105.0	–	3.2	4.2	4.0	3.2	–	3.4	4.4	4.2	3.6
110.0	–	2.8	3.8	3.4	2.8	–	2.8	4.0	3.8	3.0
115.0	–	–	3.4	3.0	2.4	–	–	3.6	3.2	3.6
120.0	–	–	3.0	2.6	2.0	–	–	3.0	2.8	2.2
125.0	–	–	2.6	2.2	1.6	–	–	–	2.4	1.8
130.0	–	–	2.2	1.8	–	–	–	–	2.0	1.4
135.0	–	–	–	1.6	–	–	–	–	1.6	–

THIS CHART IS ONLY A GUIDE AND SHOULD NOT BE USED TO OPERATE THE CRANE.
The individual crane's load chart, operating instructions and other instructional plates must be read and understood prior to operating the crane.

Courtesy of Crane.Market

Load charts
Hydraulic offsettable swingaway

43 m (141 ft)	8,7 m (28.5 ft) Hydraulic luffing	11 600 kg (25,500 lb)	22.4 ft x 20.3 ft 100%	360˚

Feet	Pounds x 1000									
	28.5 ft length									
	0º – 20º Offset (loads for luffing)					20º – 40º Offset (loads for luffing)				
	87.4	99.6	117.4	128.5	140.9	87.4	99.6	117.4	128.5	140.9
30.0	5.6	5.8	–	–	–	–	–	–	–	–
35.0	5.2	5.4	–	–	–	4.2	–	–	–	–
40.0	5.0	5.2	5.4	5.6	–	4.2	4.2	–	–	–
45.0	4.6	4.8	5.2	5.2	5.4	4.0	4.0	4.2	–	–
50.0	4.4	4.6	4.8	5.0	5.2	4.0	4.0	4.0	4.2	4.2
55.0	4.2	4.4	4.6	4.8	5.0	3.8	3.8	4.0	4.0	4.0
60.0	4.0	4.2	4.4	4.6	4.8	3.8	3.8	3.8	4.0	4.0
65.0	3.8	4.0	4.4	4.4	4.6	3.6	3.8	3.8	3.8	3.8
70.0	3.8	4.0	4.2	4.2	4.4	3.6	3.6	3.8	3.8	3.8
75.0	3.6	3.8	4.0	4.2	4.2	3.6	3.6	3.6	3.8	3.8
80.0	3.4	3.6	3.8	4.0	4.2	3.4	3.6	3.6	3.6	3.8
85.0	3.4	3.6	3.8	3.8	4.0	3.4	3.6	3.6	3.6	3.6
90.0	3.2	3.4	3.6	3.8	4.0	3.4	3.4	3.6	3.6	3.6
95.0	3.0	3.4	3.6	3.6	3.8	3.2	3.4	3.6	3.6	3.6
100.0	3.0	3.2	3.4	3.6	3.6	–	3.4	3.4	3.6	3.6
105.0	–	3.0	3.4	3.6	3.2	–	3.2	3.4	3.6	3.4
110.0	–	2.6	3.4	3.2	2.6	–	2.6	3.4	3.4	3.0
115.0	–	2.2	3.0	2.8	2.2	–	–	3.2	3.0	3.2
120.0	–	–	2.6	2.4	1.8	–	–	2.8	2.6	2.0
125.0	–	–	2.4	2.0	1.6	–	–	–	2.2	1.6
130.0	–	–	2.0	1.6	–	–	–	–	1.8	1.4
135.0	–	–	–	1.4	–	–	–	–	1.4	–

THIS CHART IS ONLY A GUIDE AND SHOULD NOT BE USED TO OPERATE THE CRANE.
The individual crane's load chart, operating instructions and other instructional plates must be read and understood prior to operating the crane.

Courtesy of Crane.Market

Load charts

Hydraulic offsettable swingaway

43 m (141 ft)	15 m (49.2 ft) Hydraulic luffing	11 600 kg (25,500 lb)	22.4 ft x 20.3 ft 100%	360°

Feet	Pounds x 1000									
	49.2 ft length									
	0° Offset					20° – 40° Offset (intermediate angle)				
	87.4	99.6	117.4	128.5	140.9	87.4	99.6	117.4	128.5	140.9
20.0	9.2	–	–	–	–	–	–	–	–	–
25.0	8.8	8.4	–	–	–	–	–	–	–	–
30.0	8.4	8.2	6.6	5.8	–	–	–	–	–	–
35.0	7.8	7.8	6.6	5.8	5.6	–	–	–	–	–
40.0	7.2	7.4	6.4	5.8	5.6	–	–	–	–	–
45.0	6.8	7.0	6.4	5.8	5.6	–	–	–	–	–
50.0	6.2	6.4	6.2	5.8	5.6	4.0	–	–	–	–
55.0	6.0	6..2	6.0	5.8	5.6	4.0	4.0	–	–	–
60.0	5.6	5.8	5.8	5.8	5.4	3.8	3.8	3.8	–	–
65.0	5.2	5.6	5.4	5.6	5.4	3.8	3.8	3.8	–	–
70.0	5.0	5.2	5.2	5.4	5.4	3.6	3.8	3.8	3.8	3.8
75.0	4.8	5.0	5.0	5.2	5.2	3.6	3.6	3.6	3.6	3.6
80.0	4.6	4.8	4.8	5.0	5.0	3.6	3.6	3.6	3.6	3.6
85.0	4.4	4.6	4.6	4.8	4.8	3.4	3.6	3.6	3.6	3.6
90.0	4.2	4.4	4.4	4.6	4.6	3.4	3.4	3.4	3.4	3.6
95.0	4.0	4.2	4.2	4.4	4.6	3.4	3.4	3.4	3.4	3.4
100.0	3.8	4.0	4.0	4.2	4.0	3.4	3.4	3.4	3.4	3.4
105.0	3.8	4.0	3.8	4.0	3.6	3.4	3.4	3.4	3.4	3.4
110.0	3.6	3.4	3.6	3.8	3.2	3.4	3.4	3.4	3.4	3.4
115.0	3.6	3.0	3.4	3.4	2.8	3.4	3.4	3.4	3.4	3.2
120.0	3.4	2.6	3.2	3.0	2.4	–	3.0	3.2	3.4	2.8
125.0	–	2.2	3.0	2.6	2.0	–	–	3.2	3.0	2.4
130.0	–	1.8	2.6	2.2	1.6	–	–	3.0	2.6	2.2
135.0	–	–	–	2.0	1.4	–	–	–	2.4	1.8
140.0	–	–	–	1.6	–	–	–	–	2.0	1.4
145.0	–	–	–	1.4	–	–	–	–	1.6	–
150.0	–	–	–	–	–	–	–	–	1.4	–

THIS CHART IS ONLY A GUIDE AND SHOULD NOT BE USED TO OPERATE THE CRANE.
The individual crane's load chart, operating instructions and other instructional plates must be read and understood prior to operating the crane.

Courtesy of Crane.Market

Load charts

Hydraulic offsettable swingaway

43 m (141 ft)	15 m (49.2 ft) Hydraulic luffing	11 600 kg (25,500 lb)	22.4 ft x 20.3 ft 100%	360°

Feet	Pounds x 1000									
	49.2 ft length									
	0° – 20° Offset (loads for luffing)					20° – 40° Offset (loads for luffing)				
	87.4	99.6	117.4	128.5	140.9	87.4	99.6	117.4	128.5	140.9
40.0	2.8	3.0	–	–	–	–	–	–	–	–
45.0	2.6	2.8	–	–	–	–	–	–	–	–
50.0	2.4	2.6	2.8	2.8	–	2.0	–	–	–	–
55.0	2.4	2.4	2.6	2.6	2.8	2.0	2.0	–	–	–
60.0	2.2	2.4	2.4	2.6	2.6	1.8	2.0	2.0	–	–
65.0	2.0	2.2	2.4	2.4	2.4	1.8	1.8	1.8	–	–
70.0	2.0	2.0	2.2	2.2	2.4	1.8	1.8	1.8	1.8	1.8
75.0	1.8	2.0	2.2	2.2	2.2	1.8	1.8	1.8	1.8	1.8
80.0	1.8	1.8	2.0	2.2	2.2	1.6	1.6	1.8	1.8	1.8
85.0	1.8	1.8	2.0	2.0	2.0	1.6	1.6	1.8	1.8	1.8
90.0	1.6	1.8	1.8	2.0	2.0	1.6	1.6	1.6	1.6	1.8
95.0	1.6	1.6	1.8	1.8	2.0	1.6	1.6	1.6	1.6	1.6
100.0	1.6	1.6	1.8	1.8	1.8	1.6	1.6	1.6	1.6	1.6
105.0	1.4	1.6	1.6	1.8	1.8	1.4	1.6	1.6	1.6	1.6
110.0	1.4	1.6	1.6	1.6	1.8	1.4	1.6	1.6	1.6	1.6
115.0	1.4	1.4	1.6	1.6	1.6	1.4	1.4	1.6	1.6	1.6
120.0	–	1.4	1.6	1.6	1.6	–	1.4	1.6	1.6	1.6
125.0	–	1.4	1.4	1.6	1.6	–	–	1.4	1.6	1.6
130.0	–	–	1.4	1.6	1.6	–	–	1.4	1.6	1.6
135.0	–	–	–	1.4	1.4	–	–	–	1.4	1.6
140.0	–	–	–	1.4	–	–	–	–	1.4	1.4
145.0	–	–	–	–	–	–	–	–	1.4	–

THIS CHART IS ONLY A GUIDE AND SHOULD NOT BE USED TO OPERATE THE CRANE.
The individual crane's load chart, operating instructions and other instructional plates must be read and understood prior to operating the crane.

Courtesy of Crane.Market

Load charts

Hydraulic offsettable swingaway

43 m (141 ft)	8,7 m (28.5 ft) Hydraulic luffing	7600 kg (16,700 lb)	22.4 ft x 20.3 ft 100%	360˚

Feet	Pounds x 1000									
	28.5 ft length									
	0º Offset					20º – 40º Offset (intermediate angle)				
	87.4	99.6	117.4	128.5	140.9	87.4	99.6	117.4	128.5	140.9
20.0	17.4	17.0	–	–	–	–	–	–	–	–
25.0	16.0	16.0	12.4	–	–	–	–	–	–	–
30.0	14.6	15.0	12.4	9.2	–	–	–	–	–	–
35.0	13.6	14.0	12.0	9.2	9.4	8.0	–	–	–	–
40.0	12.6	13.2	11.0	9.2	9.4	7.8	7.8	–	–	–
45.0	11.4	12.4	10.0	9.2	9.4	7.6	7.6	7.6	–	–
50.0	10.4	11.6	9.0	9.2	9.4	7.4	7.6	7.4	7.4	7.4
55.0	10.0	9.8	8.4	8.6	8.8	7.2	7.4	7.4	7.4	7.4
60.0	9.4	8.4	7.8	8.0	7.8	7.2	7.2	7.2	7.2	7.2
65.0	8.4	7.2	7.2	7.6	6.6	7.0	7.2	6.8	7.0	7.2
70.0	7.2	6.2	6.8	6.6	5.8	7.0	6.8	6.4	6.6	6.4
75.0	6.4	5.4	6.2	5.6	5.0	6.8	5.8	6.2	6.2	5.4
80.0	5.6	4.6	5.4	5.0	4.2	6.0	5.0	5.8	5.4	4.6
85.0	4.8	3.8	4.8	4.2	3.6	5.0	4.2	5.2	4.6	4.0
90.0	4.0	3.2	4.2	3.8	3.0	4.4	3.6	4.6	4.0	3.4
95.0	3.4	2.6	3.6	3.2	2.4	3.6	3.0	4.0	3.6	2.8
100.0	3.0	2.2	3.2	2.8	2.0	–	2.4	3.4	3.0	2.4
105.0	–	1.6	2.8	2.4	1.6	–	1.8	3.0	2.6	2.0
110.0	–	–	2.4	2.0	–	–	1.4	2.6	2.2	1.6
115.0	–	–	2.0	1.6	–	–	–	2.2	1.8	–
120.0	–	–	1.6	–	–	–	–	1.8	1.4	–

THIS CHART IS ONLY A GUIDE AND SHOULD NOT BE USED TO OPERATE THE CRANE.
The individual crane's load chart, operating instructions and other instructional plates must be read and understood prior to operating the crane.

Courtesy of Crane.Market

Load charts

Hydraulic offsettable swingaway

43 m (141 ft)	8,7 m (28.5 ft) Hydraulic luffing	7600 kg (16,700 lb)	22.4 ft x 20.3 ft 100%	360°

Feet	Pounds x 1000									
	28.5 ft length									
	0° – 20° Offset (loads for luffing)					20° – 40° Offset (loads for luffing)				
	87.4	99.6	117.4	128.5	140.9	87.4	99.6	117.4	128.5	140.9
30.0	5.6	5.8	–	–	–	–	–	–	–	–
35.0	5.2	5.4	–	–	–	4.2	–	–	–	–
40.0	5.0	5.2	5.4	5.6		4.2	4.2	–	–	–
45.0	4.6	4.8	5.2	5.2	5.4	4.0	4.0	4.2	–	–
50.0	4.4	4.6	4.8	5.0	5.2	4.0	4.0	4.0	4.2	4.2
55.0	4.2	4.4	4.6	4.8	5.0	3.8	3.8	4.0	4.0	4.0
60.0	4.0	4.2	4.4	4.6	4.8	3.8	3.8	3.8	4.0	4.0
65.0	3.8	4.0	4.4	4.4	4.6	3.6	3.8	3.8	3.8	3.8
70.0	3.8	4.0	4.2	4.2	4.4	3.6	3.6	3.8	3.8	3.8
75.0	3.6	3.8	4.0	4.2	4.2	3.6	3.6	3.6	3.8	3.8
80.0	3.4	3.6	3.8	4.0	4.2	3.4	3.6	3.6	3.6	3.8
85.0	3.4	3.6	3.8	3.8	3.6	3.4	3.6	3.6	3.6	3.6
90.0	3.2	3.0	3.6	3.6	3.0	3.4	3.4	3.6	3.6	3.4
95.0	3.0	2.4	3.4	3.2	2.4	3.2	2.8	3.6	3.4	2.8
100.0	2.6	2.0	3.0	2.6	2.0	–	2.2	3.2	3.0	2.4
105.0	–	1.6	2.6	2.2	1.6	–	1.8	2.8	2.4	2.0
110.0	–	–	2.2	1.8	–	–	1.2	2.4	2.0	1.6
115.0	–	–	1.8	1.4	–	–	–	2.0	1.6	–
120.0	–	–	1.4	–	–	–	–	1.6	1.2	–

THIS CHART IS ONLY A GUIDE AND SHOULD NOT BE USED TO OPERATE THE CRANE.
The individual crane's load chart, operating instructions and other instructional plates must be read and understood prior to operating the crane.

Courtesy of Crane.Market

Load charts

Hydraulic offsettable swingaway

43 m (141 ft)	15 m (49.2 ft) Hydraulic luffing	7600 kg (16,700 lb)	22.4 ft x 20.3 ft 100%	360°

Feet	Pounds x 1000									
	49.2 ft length									
	0º Offset					20º – 40º Offset (intermediate angle)				
	87.4	99.6	117.4	128.5	140.9	87.4	99.6	117.4	128.5	140.9
20.0	9.2	–	–	–	–	–	–	–	–	–
25.0	8.8	8.4	–	–	–	–	–	–	–	–
30.0	8.4	8.2	6.6	5.8	–	–	–	–	–	–
35.0	7.8	7.8	6.6	5.8	5.6	–	–	–	–	–
40.0	7.2	7.4	6.4	5.8	5.6	–	–	–	–	–
45.0	6.8	7.0	6.4	5.8	5.6	–	–	–	–	–
50.0	6.2	6.4	6.2	5.8	5.6	4.0	–	–	–	–
55.0	6.0	6.2	6.0	5.8	5.6	4.0	4.0	–	–	–
60.0	5.6	5.8	5.8	5.8	5.4	3.8	3.8	3.8	–	–
65.0	5.2	5.6	5.4	5.6	5.4	3.8	3.8	3.8	–	–
70.0	5.0	5.2	5.2	5.4	5.4	3.6	3.8	3.8	3.8	3.8
75.0	4.8	5.0	5.0	5.2	5.2	3.6	3.6	3.6	3.6	3.6
80.0	4.6	4.8	4.8	5.0	4.6	3.6	3.6	3.6	3.6	3.6
85.0	4.4	4.4	4.6	4.6	4.0	3.4	3.6	3.6	3.6	3.6
90.0	4.2	3.8	4.4	4.0	3.4	3.4	3.4	3.4	3.4	3.6
95.0	4.0	3.4	4.0	3.6	2.8	3.4	3.4	3.4	3.4	3.4
100.0	3.6	2.8	3.6	3.0	2.4	3.4	3.4	3.4	3.4	3.0
105.0	3.2	2.4	3.2	2.6	2.0	3.4	3.0	3.4	3.2	2.6
110.0	2.8	2.0	2.8	2.2	1.6	3.0	2.4	3.2	2.8	2.2
115.0	2.4	1.6	2.4	2.0	–	2.6	2.0	2.8	2.4	1.8
120.0	2.0	–	2.0	1.6	–	–	1.6	2.4	2.0	1.4
125.0	–	–	1.8	1.4	–	–	–	2.0	1.6	–
130.0	–	–	1.4	–	–	–	–	1.8	1.4	–

THIS CHART IS ONLY A GUIDE AND SHOULD NOT BE USED TO OPERATE THE CRANE.
The individual crane's load chart, operating instructions and other instructional plates must be read and understood prior to operating the crane.

Courtesy of Crane.Market

Load charts

Hydraulic offsettable swingaway

43 m (141 ft)	15 m (49.2 ft) Hydraulic luffing	7600 kg (16,700 lb)	22.4 ft x 20.3 ft 100%	360°

Feet	Pounds x 1000									
	49.2 ft length									
	0° – 20° Offset (loads for luffing)					20° – 40° Offset (loads for luffing)				
	87.4	99.6	117.4	128.5	140.9	87.4	99.6	117.4	128.5	140.9
40.0	2.8	3.0	–	–	–	–	–	–	–	–
45.0	2.6	2.8	–	–	–	–	–	–	–	–
50.0	2.4	2.6	2.8	2.8	–	2.0	–	–	–	–
55.0	2.4	2.4	2.6	2.6	2.8	2.0	2.0	–	–	–
60.0	2.2	2.4	2.4	2.6	2.6	1.8	2.0	2.0	–	–
65.0	2.0	2.2	2.4	2.4	2.4	1.8	1.8	1.8	–	–
70.0	2.0	2.0	2.2	2.2	2.4	1.8	1.8	1.8	1.8	1.8
75.0	1.8	2.0	2.2	2.2	2.2	1.8	1.8	1.8	1.8	1.8
80.0	1.8	1.8	2.0	2.2	2.2	1.6	1.6	1.8	1.8	1.8
85.0	1.8	1.8	2.0	2.0	2.0	1.6	1.6	1.8	1.8	1.8
90.0	1.6	1.8	1.8	2.0	2.0	1.6	1.6	1.6	1.6	1.8
95.0	1.6	1.6	1.8	1.8	2.0	1.6	1.6	1.6	1.6	1.6
100.0	1.6	1.6	1.8	1.8	1.8	1.6	1.6	1.6	1.6	1.6
105.0	1.4	1.6	1.6	1.8	1.8	1.4	1.6	1.6	1.6	1.6
110.0	1.4	1.6	1.6	1.6	1.6	1.4	1.6	1.6	1.6	1.6
115.0	1.4	1.4	1.6	1.6	–	1.4	1.4	1.6	1.6	1.6
120.0	–	–	1.6	1.6	–	–	1.4	1.6	1.6	1.4
125.0	–	–	1.4	–	–	–	–	1.4	1.6	–
130.0	–	–	1.2	–	–	–	–	1.4	1.2	–

THIS CHART IS ONLY A GUIDE AND SHOULD NOT BE USED TO OPERATE THE CRANE.
The individual crane's load chart, operating instructions and other instructional plates must be read and understood prior to operating the crane.

Courtesy of Crane.Market

Notes

Courtesy of Crane.Market

Symbols glossary

- Axles
- Boom
- Boom elevation
- Boom extension
- Boom length
- Boom nose
- Brakes
- Cab
- Counterweight
- Drive
- Electrical system
- Engine
- Extension
- Frame
- Fuel tank capacity
- Gear
- Grade
- Heavy duty jib
- Hoist
- Hookblock
- Hydraulic system
- Lights
- Oil
- Outrigger controls
- Outriggers
- Radius
- Rotation
- Speed
- Steering
- Suspension
- Swing
- Tires
- Transmission

Courtesy of Crane.Market

Grove Manitowoc National Crane Potain

Regional headquarters

Manitowoc - Americas
Manitowoc, Wisconsin, USA
Tel: +1 920 684 6621
Fax: +1 920 683 6277

Shady Grove, Pennsylvania, USA
Tel: +1 717 597 8121
Fax: +1 717 597 4062

Manitowoc - Europe, Middle East & Africa
Ecully, France
Tel: +33 (0)4 72 18 20 20
Fax: +33 (0)4 72 18 20 00

Manitowoc - Asia Pacific
Shanghai, China
Tel: +86 21 6457 0066
Fax: +86 21 6457 4955

Regional offices

Americas
Brazil
Alphaville
Mexico
Monterrey
Chile
Santiago

Europe, Middle East & Africa
Algeria
Hydra
Czech Republic
Netvorice
France
Baudemont
Cergy
Decines
Germany
Langenfeld
Hungary
Budapest
Italy
Parabiago
Netherlands
Breda
Poland
Warsaw
Portugal
Baltar
Lisbon
Russia
Moscow
U.A.E.
Dubai
U.K.
Gawcott

Asia - Pacific
Australia
Brisbane
Melbourne
Sydney
China
Beijing
Xi'an
India
Hyderabad
Pune
Korea
Seoul
Philippines
Makati City
Singapore

Factories

Brazil
Alphaville
China
TaiAn
Zhangjiagang
France
Charlieu
La Clayette
Moulins
Germany
Wilhelmshaven
India
Pune
Italy
Niella Tanaro
Portugal
Baltar
Fânzeres
Slovakia
Saris
USA
Manitowoc
Port Washington
Shady Grove

This document is non-contractual. Constant improvement and engineering progress make it necessary that we reserve the right to make specification, equipment, and price changes without notice. Illustrations shown may include optional equipment and accessories and may not include all standard equipment.

©2009 Manitowoc
Printed in USA
Form No. GMK3055 PG
Part No. 04-012 - 2M - 1009

www.manitowoc.com

Courtesy of Crane.Market