SL, SBL-SERIES
TELESCOPIC HYDRAULIC GANTRIES

THE ULITMATE IN SAFETY AND CONTROL

ENERPAC

Courtesy of CraneMarket.com

Precision Lift and Position Heavy Loads

The Ultimate in Safety and Control

Highest Quality

- **Enerpac adheres to the highest quality standards and maintains rigid QA manufacturing processes**
- **Lloyd's witness tested to 125% of maximum working load**

Best Support

- **Product training is available at our place or yours, to ensure operators are fully trained prior to using the equipment**
- **Our global staff is available to help anywhere the equipment may be in operation**

Proven Safety

- **All Enerpac gantries comply to ASME B30.1 and other Safety Standards**
- **Advance technology and controls alert operator of unsafe conditions and stops gantry operations**

Courtesy of CraneMarket.com

Telescopic Hydraulic Gantries

Hydraulic Gantries

Hydraulic Gantries are a safe, efficient way to lift and position heavy loads in applications where traditional cranes will not fit and permanent overhead structures are not an option.

Hydraulic Gantries are placed on skid tracks to provide a means for moving and placing heavy loads, many times with only one pick.

Enerpac offers two series of Hydraulic Gantry systems:

- The cost-effective **SL-Series Super Lift** with best-in-class control and comparable capacity utilizing telescopic cylinders offered in 2 or 3 stages
- The heavy-duty **SBL-Series Super Boom Lift** with capacities up to 1,200 tons and 3-stage lifting capability through the boom structure

All Enerpac gantries are delivered with specific properties and control systems to ensure optimum stability and safety.

Standard Features

- Self-contained hydraulics
- Wireless Intellilift controls
- Synchronous lifting and lowering
- Self-propelled wheels or tank rollers with synchronized travel.

SL SBL Series

Capacity (4 legs):
110-1178 tons

Lift Height:
6.69-39.38 feet

1	Gantry Leg	Required
2	Skid Track	Required
3	Side-Shift	Optional
4	Header Beam	Required
5	Lifting Anchor*	Optional
6	Intellilift	Included

*In the illustration Side-Shifts are shown. However, some loads can be lifted with Lifting Anchors. For this reason a Lifting Anchor is shown.

INTELLILIFT

The Intellilift wireless control system is included with all Enerpac hydraulic gantries. The Intellilift controller offers superior safety and control and includes the following features:

- Encrypted bi-directional communication that eliminates interference from other devices
- Remote operation using multi-channel wireless (2.4 GHz) or wired (RS-485) control
- High and low speed settings
- Automatic synchronization of lifting with an accuracy of 1 inch (25.4 mm)
- Automatic synchronization of travelling with an accuracy of 0.60 inch (15 mm)
- Overload and stroke alarms
- Remote side-shift control
- Emergency stop switch

Courtesy of CraneMarket.com

▼ Typical SL400 configuration with Skid Tracks, Header Beams and Side-Shifts

SL Series

Capacity (4 legs):
110-450 tons

Lift Height:
6.69-30.00 feet

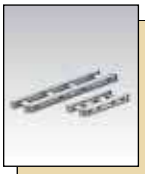

Skid Tracks

Skid tracks used for leveling and load distribution to reduce ground bearing pressure. Available in two standard lengths, 10 feet and 20 feet.

Page: **6**

Header Beams

Sold in pairs and includes lifting points and fork pockets for easy positioning on gantry towers.

Available in 26.24 ft., 32.80 ft. and 39.36 ft. lengths. Custom lengths available on request.

Page: **6**

- **Built-in load holding valves to prevent drifting**
- **Double-acting cylinders with internal retract porting eliminate hazards to external plumbing**
- **SL100 - SL400N are provided with a hand crank to easily switch to free wheel mode**
- **SL400 utilizes same accessories as SBL-Series**

◀ SL400 Gantry during load testing.

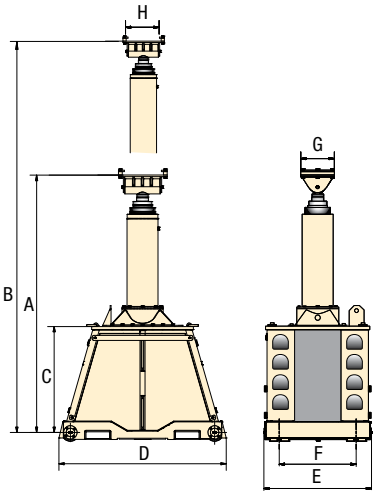

Maximum Capacity (4 legs) (tons)	Model No. (4 legs)	Retracted Height A (ft)	Stage 1 Max. Height B (ft)	Stage 1 Max. Cap. (4 legs) (tons)	Stage 2 Max. Height B (ft)	Stage 2 Max. Cap. (4 legs) (tons)	Stage 3 Max. Height B (ft)	Stage 3 Max. Cap. (4 legs) (tons)	Base Height C (in)	Base Length D (in)	Base Width E (in)	Track Gauge F (in)	Beam Plate G (in)	Beam Plate H (in)	Weight per leg (with oil) (lbs)
110	**SL100**	6.73	11.17	110	15.59	66	–	–	61.02	55.12	34.65	24.00	13.78	22.83	3825
220	**SL200**	8.96	15.47	220	21.98	150	–	–	61.02	55.12	34.65	24.00	13.78	22.83	4850
337	**SL300**	8.91	15.11	337	22.01	220	–	–	74.80	66.93	34.65	24.00	15.75	22.83	7165
450	**SL400N**	8.94	14.31	450	19.76	337	25.26	220	74.80	66.93	34.65	24.00	15.75	22.83	7937
450	**SL400**	10.39	17.14	450	23.73	450	29.99	208	54.25	79.65	50.75	36.00	15.75	22.83	10,141

Courtesy of CraneMarket.com

▼ **SBL1100 with Skid Tracks, Header Beams and Side-Shifts**

SBL Series

Capacity (4 legs):
585-1178 tons

Lift Height:
9.93-39.38 feet

Powered Side-Shift

Electric propulsion controlled by standard gantry controls. Each set consists of four units.

Page: **7**

Lifting Anchors

Designed to transfer the load to the top of the header beam. Can accommodate a 250-ton shackle or attach directly to the lifted load.

Page: **8**

- **Octagonal boom: provides added strength for increased capacity and lifting height**
- **SBL1100 and SBL900 have foldable boom to enable easy transport and setup**
- **SBL1100 and SBL900 have tank rollers to provide optimum load distribution**
- **SBL500 has fixed boom and steel wheels**

◀ *SBL1100 Hydraulic Gantry*

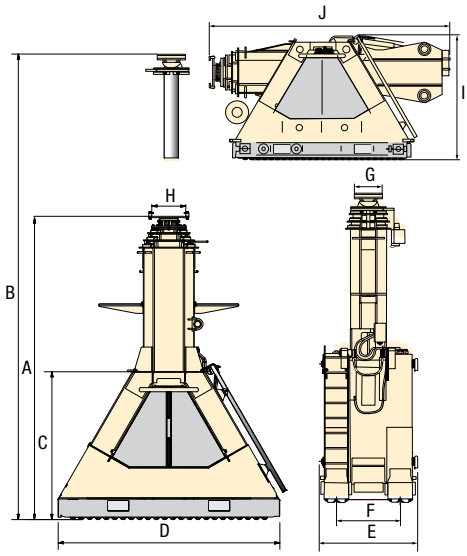

Maximum Capacity (4 legs) (tons)	Model No. (4 legs)	Retracted Height A (ft)	Stage 1 Max. Height B (ft)	Stage 1 Max. Cap. (4 legs) (tons)	Stage 2 Max. Height B (ft)	Stage 2 Max. Cap. (4 legs) (tons)	Stage 3 Max. Height B (ft)	Stage 3 Max. Cap. (4 legs) (tons)	Base Height C (in)	Base Length D (in)	Base Width E (in)	Track Gauge F (in)	Beam Plate Length G (in)	Beam Plate Width H (in)	Transport Dimensions I (ft)	Transport Dimensions J (ft)	Weight per leg (with oil) (lbs)
585	**SBL500**	9.97	16.40	585	22.66	585	28.27	337	53.74	78.39	50.43	36.00	15.75	22.83	–	–	15,446
1009	**SBL900**	16.42	27.24	1009	37.09	664	–	–	83.82	135.98	55.43	36.00	15.75	22.83	7.41	14.16	29,432
1178	**SBL1100**	14.34	22.98	1178	31.72	760	39.38	424	83.82	135.98	55.43	36.00	15.75	22.83	7.41	14.16	26,345

Courtesy of CraneMarket.com

▼ Skid Tracks

SKID TRACKS

Allows for easy leveling of the gantry leg, available in two standard lengths.

- **Required to support and level gantry**
- **Smoother travel, better load distribution**
- **Includes lifting eyes and/or fork pockets**

Skid Track End-Stop

Safety device prevents over-travel.

Order model Number: **TES**

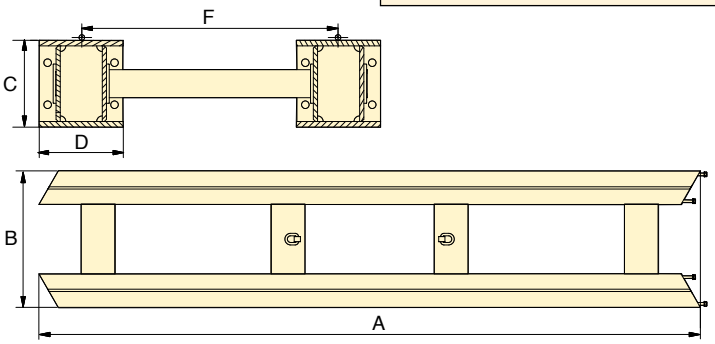

Used with Gantry Series	Model Number	Track Length A (ft)	Track Width B (in)	Track Height C (in)	Track Base D (in)	Track Gauge F (in)	Weight (lbs)
SL100	**GST100-3**	9.84	31.89	7.87	7.87	24.00	926
	GST100-6	19.36	31.89	7.87	7.87	24.00	1874
SL200/300/ 400N	**GST400-3**	9.84	32.68	11.02	8.66	24.00	1554
	GST400-6	19.36	32.68	11.02	8.66	24.00	3020
SL400 and all SBLs	**GST1100-3**	9.84	47.80	12.20	11.81	36.00	2293
	GST1100-6	19.36	47.80	12.20	11.81	36.00	4475

▼ Header Beams

HEADER BEAMS

Sold in pairs and includes lifting points and/or fork pockets for easy positioning on gantry legs.

- **Supplied with load chart**
- **Includes lifting eyes and/or fork pockets**
- **All gantries are designed to accept either HBH- or HBB-Series beams**

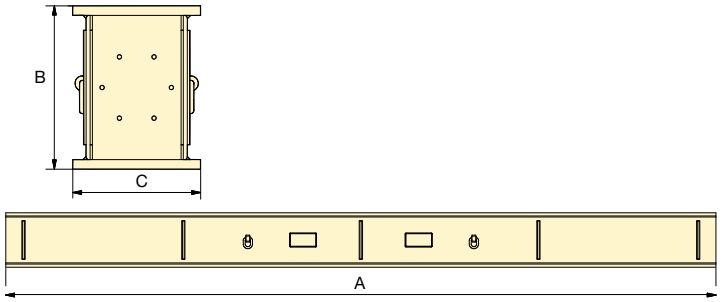

This drawing represents HBB beams, HBH beams are H-beams.

Model Number	*Maximum Load at Beam Center (tons)	Beam Length A (ft)	Beam Depth B (in)	Beam Width C (in)	Weight (lbs)
HBH6	**70**	19.69	17.01	12.09	3527
HBH8	**77**	26.25	22.52	12.05	5203
HBB8	**114**	26.25	23.62	18.90	7260
HBB10	**90**	32.81	23.62	18.90	9039
HBB12	**148**	39.21	37.40	18.90	14,259

* Based on single point in center of beam. Consult Enerpac for load chart showing capacity off center per lifting anchor.

Courtesy of CraneMarket.com

Additional Gantry Accessories

▼ **Powered Side-Shifts**

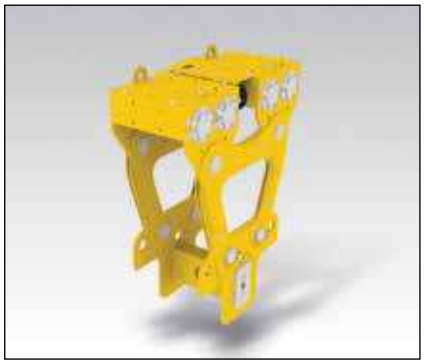

POWERED SIDE-SHIFT

Electric propulsion controlled by standard gantry controls.

- **Used to shift load along header beam**
- **Each side-shift contains an electric drive**
- **Utilizes existing gantry wireless control**
- **Set of four includes sturdy transport frame**

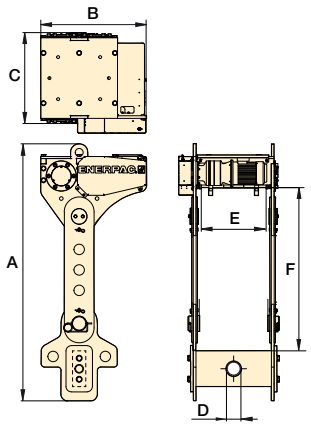

Used with Header Beam	Model No. [1]	Capacity per Side-Shift (tons)	Motor Power (hp)	Travel Speed (in/min)	Side-Shift Height A [2] (in)	Side-Shift Width B (in)	Side-Shift Depth C (in)	Pin Hole D (in)	Internal Width E (in)	Internal Height F [2] (in)	Weight per Side-Shift (lbs)
HBH	**SSU150**	42	1.0	20	47.24	23.23	26.20	2.95	12.80	27.36	772
HBB	**SSU300**	84	1.0	35	76.54	31.34	29.50	4.33	19.29	48.62	1795
	SSU600	169	1.0	35	75.93	55.12	29.50	5.71	19.29	46.69	3307

[1] Each model number includes four propelled unit and cable guides. [2] Custom heights available upon request.

▼ **Top Swivel Kits**

▼ Top Swivel Kits (mounts cross beam on side-shift unit)

Kit Model Number	Used With Model No.	Description	Capacity (per unit) (ton)	Set (qty)	Weight per Unit (lbs)
TSK150	SSU150-Series	Top Swivel Kit	41	4	209
TSK300	SSU300-Series	Top Swivel Kit	83	4	507
TSK600	SSU600-Series	Top Swivel Kit	165	4	1554

▼ **Sling Guides**

▼ Sling Guides (protects slings from damage)

Sling Guide Model Number	Used With Model No.	Type of Sling Guide	Capacity (per unit) (ton)	Set (qty)	Weight per Unit (lbs)
HBHSG	HBH-Series	Header Beam	56	4	216
HBBSG	HBB-Series		281	4	364
SSG150	SSU150-Series	Side-Shift Unit	41	4	51
SSG300	SSU300-Series		83	4	165
SSG600	SSU600-Series		165	4	170

▼ Side-Shift Control Panel and Cable Reels (controls side-shift unit separate from gantry controls)

Model Number	Used With	Description	Cable Length (ft)	Set (qty)	Weight per Unit (lbs)
SSPW	SSU-Series Power Side-Shift	380-400 VAC, 50 Hz	82	—	386
SSPJ		460-480 VAC, 60 Hz	82	—	386
SSCR-1		Side-Shift Cable Reels	65	4	110

Courtesy of CraneMarket.com

Additional Gantry Accessories

ENERPAC

▼ Lifting Anchors

- Transfer load to the top of the header beam
- Used to attach rigging to header beam
- Manually spaced to desired location

LL200, LL500

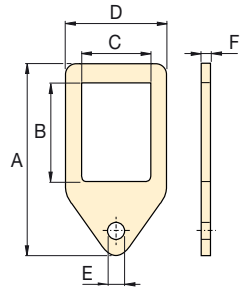

LL1000

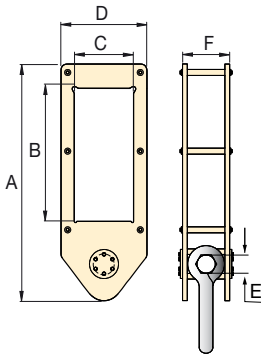

Used with Header Beam	Model No.	Capacity per Anchor (tons)	Anchor Height A (in)	Beam Hole Depth B (in)	Beam Hole Width C (in)	Anchor Width D (in)	Pin Hole E (in)	Anchor Depth F (in)	Weight (lbs)
HBH	**LL200**	56	36.42	22.91	12.60	16.54	2.95	1.18	82
HBB	**LL500**	140	76.97	43.31	19.29	27.95	8.07	1.57	485
	LL1000*	281	76.97	43.31	19.29	27.95	5.13	16.85	1323

* LL1000 is built with two LL500 plates connected together and designed to use heavy-duty shackle (not included)

▼ Slings

- Lightweight and flexible
- Safe and easy to handle
- Reduces wear on painted surfaces
- Durable construction
- Heat-resistant and non-conductive
- Available with added HMPE wear protection where needed

▼ Slings (endless grommet)

Sling Model Number	Capacity (ton)	Length (ft)
EGS18-2	19.80	6.5
EGS18-4	19.80	13.1
EGS18-6	19.80	19.7
EGS39-2	42.90	6.5
EGS39-4	42.90	13.1
EGS39-6	42.90	19.7
EGS112-6	123.20	19.7
EGS112-8	123.20	26.2
EGS112-10	123.20	32.8
EGS251-6	276.10	19.7
EGS251-8	276.10	26.2
EGS251-10	276.10	32.8

▼ Shackles

- Green Pin® Brand Shackles
- Standard bow shackle with safety pin
- Other styles available upon request

▼ Shackles (18.70 to 275 ton)

Shackle Model Number	Capacity (ton)
GPS17	18.70
GPS35	38.50
GPS150	165
GPS250	275

Courtesy of CraneMarket.com

Additional Gantry Accessories

For SL, SBL Series

▼ **Azobe Wood Track Timbers**

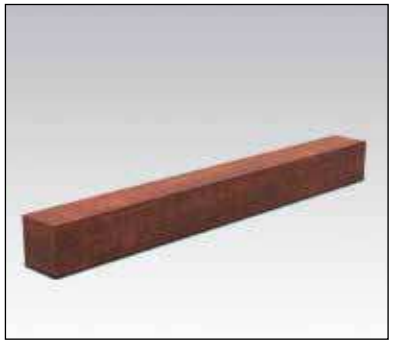

▼ Timbers and Steel Plate Accessories

Used with Gantry Series	Model Number	Material and Dimensions (in)				Description
			L	W	H	
All Gantry Series	**STAWTF**	Transport Frame for Azobe Timbers	60.63	40.94	53.75	Frame for 100 pieces
	STAW100	Azobe Wood Track Timbers	59	3.94	3.94	Includes 100 pieces
	STSP500	Steel Shimming Plates	11.81	11.81	0.04	Includes 500 plates

▼ Power Distribution Box

Model Number	Used With	Description
PDB32W	SL- or SBL-Series Gantries	380-400 VAC, 50 Hz
PDB32J		460-480 VAC, 60 Hz

- **Power Distribution Box includes one 63A inlet with mating connector and two 32A outlets**

▼ **Tarpaulin Covers**

▼ Tarpaulin Covers for Storage [1)]

Used with Gantry	Tarpaulin Cover Model Number	Description
SL100	**TCSL100**	Protects gantry from indoor and outdoor elements during storage
SL200	**TCSL200**	
SL300	**TCSL300**	
SL400N	**TCSL400N**	
SL400	**TCSL400**	
SBL500	**TCSBL500**	
SBL900	**TCSBL900**	
SBL1100	**TCSBL1100**	

[1)] Not designed for open road transport

Courtesy of CraneMarket.com

Transformer Installation with a Hydraulic Gantry

Hydraulic Boom Gantry Safely Transports 120-Ton Machine Bed

Removal of Decommissioned London Tube Trains with a Hydraulic Gantry

Transporting a 1,200-Ton Hydraulic Press to the Second Floor with a Hydraulic Gantry

Turbine Lift and Load-in at Shipping Port

Turbine and Generator Installation at a new Power Plant in Libya

Assembling an Offshore Platform Oil Rig Module

Offloading a 1,300-Ton Hydrocracker

Generator Installation at the Owen Springs Power Station

Courtesy of CraneMarket.com

Enerpac's Custom Heavy Lifting Solutions

With more than 60 years of experience, Enerpac has gained unique expertise in delivering hydraulic solutions for the controlled movement and positioning of heavy loads. This expertise has been acknowledged by the world's leading industrial professionals and has contributed to the successful movement of a number of the most recognizable structures on earth. In addition to providing the most comprehensive line of globally-supplied, locally supported products, Enerpac combines hydraulics, steel fabrication and electronic control with engineering and application knowledge, to design and manufacture solutions that ensure your projects are completed safely and efficiently.

EXPERIENCE and EXPERTISE

HYDRAULIC POWER UNITS
Enerpac designs, assembles and tests small to large hydraulic power units in-house. Power units range from ¼ to 320 hp and are tested with the system they are intended to operate.

STEEL FABRICATION
In our dedicated facility for steel fabrication and welding, we design and manufacture custom structures used in demanding heavy-lifting applications.

ELECTRONICS
Enerpac designs all control systems in-house. This capability keeps control technology close to the design engineers who are developing the rest of the system. In doing so, we can tailor the control system to match unique project requirements.

ENGINEERING
Enerpac's multi-disciplined, Heavy Lifting Technology team is capable of the design and development of all aspects of an integrated system. Leveraging design and application experience with the latest in methodologies, computer design, rapid prototyping and analysis ensures delivery of the highest quality.

MACHINING
Enerpac utilizes the latest in CNC machining technologies and manufactures all large and special hydraulic cylinders in-house. We can machine diameters up to 50 inches with lengths to 240 inches.

FIELD SUPPORT
Enerpac's Heavy Lifting Technology team is available to provide on-site support including training and troubleshooting of systems. Enerpac also stocks repair parts and consumable items at several locations to ensure fast delivery for minimal downtime.

MAINTENANCE and REPAIR
Due to the unique nature of Enerpac's Heavy Lifting Technology systems, we offer complete maintenance and repair services. Our M&R group is available to assist customers who do not have access to local service facilities qualified to work on these systems.

Courtesy of CraneMarket.com

THE RIGHT TOOL MAKES ALL THE DIFFERENCE

Enerpac heavy lifting technology products are put to work under the most intense and demanding conditions. That's why we never compromise. So you can rely on quality and precision every time, giving you the safest and most efficient path to a successful lift.

Enerpac heavy lifting technology combines technical excellence with proven performance – every day, every year, year after year. We believe that customers shouldn't have to compromise – they can rest easy knowing that even in the most complex situations, their reputations and safety are protected by the most trusted products available.

Elite tools. For Elite Professionals.

SFP-Series,
Split-Flow Pumps

EVOB-Series, Basic
Synchronous Lifting Systems

EVO-Series, Standard
Synchronous Lifting Systems

SCJ-Series,
Self-Locking Cube Jack

JS-Series,
Jack-Up Systems

SL, SBL-Series,
Telescopic Hydraulic Gantries

HSL-Series,
Strand Jack Systems

SHS, SHAS-Series,
Synchronous Hoisting Systems

LH, HSK-Series,
Skidding Systems

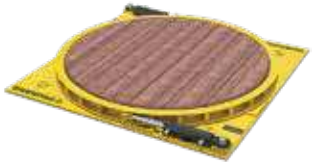

ETT-Series, Turntables

ETR-Series, Trolley Systems

SPMT-Series,
Self-Propelled Modular Trailers

ENERPAC

Enerpac Worldwide Locations
For a complete list of addresses see: www.enerpac.com/en/enerpac-locations
User Inquiries: 800-433-2766 Distributor Inquiries: 800-558-0530

www.enerpac.com

702_030132016_R2_EN-US © 2021 Enerpac - Subject to change without notice