EBI® MANUFACTURED HYDRAULIC COMPONENTS

W20-1000 Winch

STANDARD FEATURES

* Factory assembled and tested
* Marine coating system
* 1 Year Warranty
* General Dimensions: 32”L x 41 13/16”W x 32”H (w/o hydraulic motor)
* Models also available: W5-500, W5-1000, W20-1500, W50-1250 & W50-2500

WINCH PERFORMANCE DATA

2 - 2” Gear Motors / 2500 PSI @ 2000 RPM Fast - 1000 RPM Slow / 50 GPM / 3/4” Wire Rope

COMMERCIAL INTERTECH M51 HYDRAULIC MOTOR

LAYER	LINE PULL (LBS) FAST/SLOW	LINE SPEED (FPM) FAST/SLOW	DRUM CAPACITY (FT)
1	10578/21156	134/67	182
2	9893/19786	143/71	371
3	9291/18582	152/76	577
4	8758/17516	161/81	791
5	8283/16566	171/85	1023
6	7857/15713	180/90	1261
7	7472/14944	189/95	1475

2” Gear Motor / 2000 PSI @ 2000 RPM / 80 GPM / 3/4” Wire Rope

COMMERCIAL INTERTECH M75 HYDRAULIC MOTOR

LAYER	LINE PULL (LBS)	LINE SPEED (FPM)	DRUM CAPACITY (FT)
1	12200	134	182
2	11500	143	371
3	10900	152	577
4	10200	161	791
5	9600	171	1023
6	9200	180	1261
7	8800	189	1475

2 - 2 1/2” Gear Motors / 2500 PSI @ 2000 RPM Fast - 1000 RPM Slow / 60 GPM / 1” Wire Rope

COMMERCIAL INTERTECH M51 HYDRAULIC MOTOR

LAYER	LINE PULL (LBS) FAST/SLOW	LINE SPEED (FPM) FAST/SLOW	DRUM CAPACITY (FT)
1	13919/27837	135/68	139
2	12756/25512	148/74	286
3	11772/23545	160/80	450
4	10930/21859	172/86	622
5	10200/20399	185/92	812
6	9561/19122	197/99	1007

2 1/2” Gear Motors / 2000 PSI@ 1000 RPM / 50 GPM / 1” Wire Rope

COMMERCIAL INTERTECH M75 HYDRAULIC MOTOR

LAYER	LINE PULL (LBS)	LINE SPEED (FPM)	DRUM CAPACITY (FT)
1	18923	68	139
2	17342	74	286
3	16005	80	450
4	14859	86	622
5	13867	92	812
6	12999	99	1007

EBI PRODUCTS AND SPECIFICATIONS ARE SUBJECT TO CHANGE WITHOUT NOTICE OR OBLIGATIONS.

Courtesy of CraneMarket.com

MANUFACTURED HYDRAULIC COMPONENTS

W20-1000 WINCH DIMENSIONAL DATA

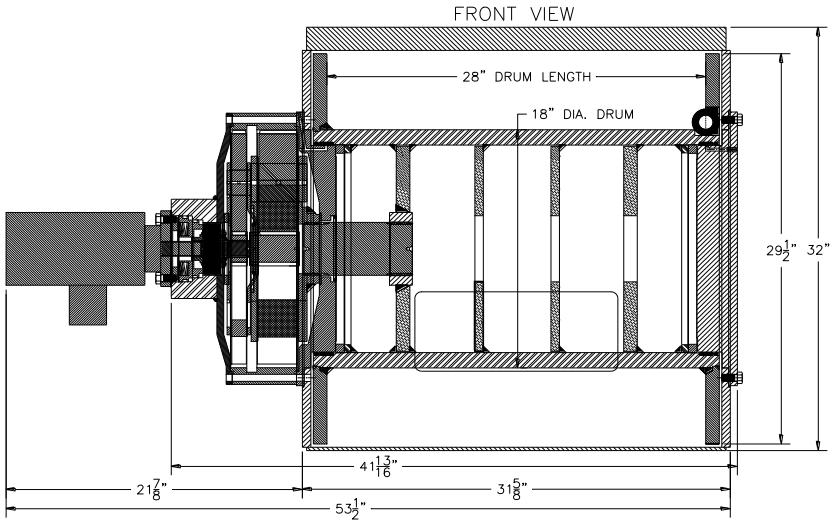

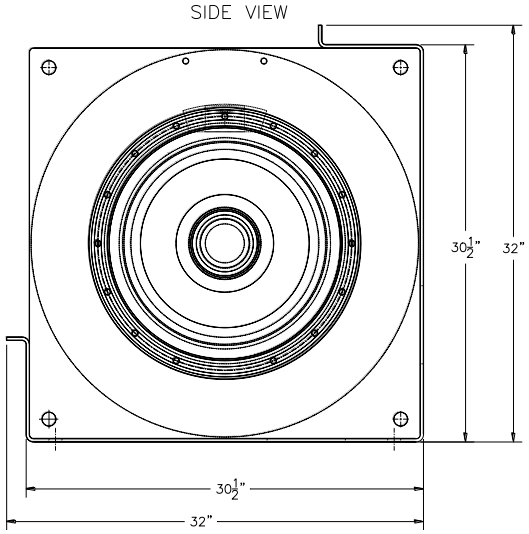

NOTE: 1. Contact EBI Engineering for optional motor sizes.
2. Counterbalance shuttle and directional valves can be furnished by EBI.

All EBI Winches are designed and manufactured to meet all requirements set forth by API Spec 2C, ABS, USCG and OSHA. EBI winches meet all design requirements for personnel handling. EBI winches must be maintained following the latest API RP-2D Winch Maintenance Guidelines.

ELEVATING BOATS LLC

Corporate/EBI Liftboats, LLC. - 124 Finish Line Lane - Houma, LA 70360
Phone: (985) 868-9655 Fax: (985) 868-9656

EBI Cranes, LLC. - 900 St. Bernard Pkwy. - Braithwaite, LA 70040
Phone: (504) 682-5245 Fax: (504) 682-5296

EBI Machining, LLC. - 40495 West I-55 Service Road - Ponchatoula, LA 70454
Phone: (985) 386-2053 Fax: (985) 386-2084

Email: postmaster@ebi-inc.com **Website: www.ebi-inc.com**

Made in U.S.A.

05REV100610

Courtesy of CraneMarket.com