DINOlift
UP TO THE JOB

Safety.
Quality.
Reliability.

DINO® TRAILERS

XT SERIES

- Trailer mounted XT series
- Working heights 16.0–26.0 m
- Articulated, telescopic boom

Courtesy of Crane.Market

DINOlift
UP TO THE JOB

Trailer mounted XT series

Standard features in all DINO XT-models:

- Driving system; easy to move at work site (picture 1)
- Hydraulic basket rotation 180° * (picture 2) *)except in 260XTD
- Spacious basket; capacity 215 kg (picture 3)
- Large outrigger plates 280 x 360 mm
- Continuous rotation of the boom; easy and functional
- Stable to tow

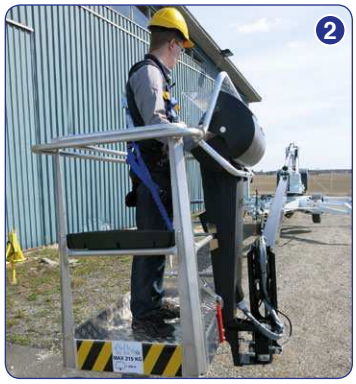

Options for all DINO XT-models:

- Cable steering for driving (picture 4)
- Two joystick steering (picture 5)
- Outrigger limit switch indicator (picture 6)
- Petrol or diesel power pack (petrol power pack standard in 210XT and 260XTD)
- Automatic leveling

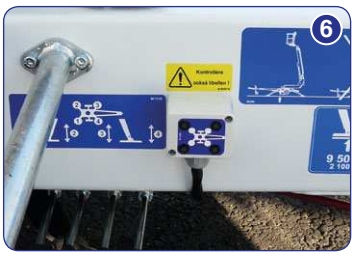

DINO® 160XT II

- **Maximum outreach with full basket load**
- **Compact size**
- **Transport length only 6.15 m**
- **Total weight less than 2000 kg including engine**

Technical data

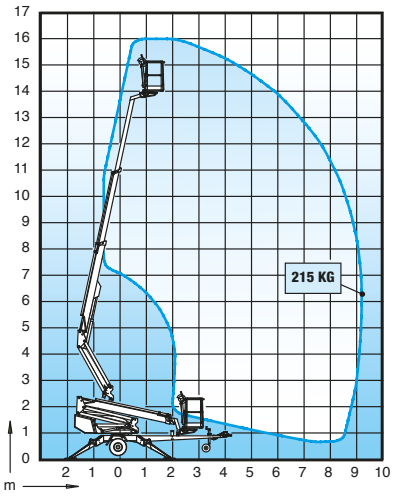

Max. working height	16.00 m
Max. platform height	14.00 m
Max. outreach	9.10 m
Support width	3.8/4.2 m
Lifting capacity	215 kg
Basket size	0.70 x 1.30 m
Boom rotation	cont.
Basket rotation	180°
Boom control	proport.
Transport length	6.15 m
Transport width	1.80 m
Transport height	2.29 m
Weight	1960 kg
Driving system	std
AC-socket in the basket x 2	std
Electro motor	std
Petrol power pack	opt.
Diesel power pack	opt.
Gradeability	25%

Courtesy of Crane.Market

DINO® 180XT II

- **Spider outriggers; great leveling capability in slopy terrain**
- **Large outreach 11.2 m**
- **180° hydraulic basket rotation**
- **Safe and easy to operate**

Technical data

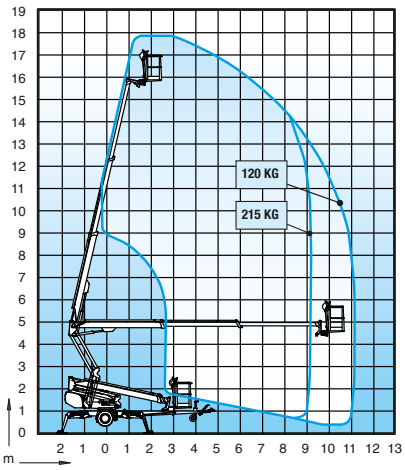

Max. working height	18.00 m
Max. platform height	16.00 m
Max. outreach	11.20 m
Support width	3.9/4.3 m
Lifting capacity	215 kg
Basket size	0.70 x 1.30 m
Boom rotation	cont.
Basket rotation	180°
Boom control	proport.
Transport length	6.70 m
Transport width	1.95 m
Transport height	2.29 m
Weight	2300 kg
Driving system	std
AC-socket in the basket x 2	std
Electro motor	std
Petrol power pack	opt.
Diesel power pack	opt.
Gradeability	25%

DINO® 210XT II

- **Spider outriggers; great leveling capability in slopy terrain**
- **Honda engine as standard**
- **Articulating and telescopic boom structure; large outreach**

Technical data

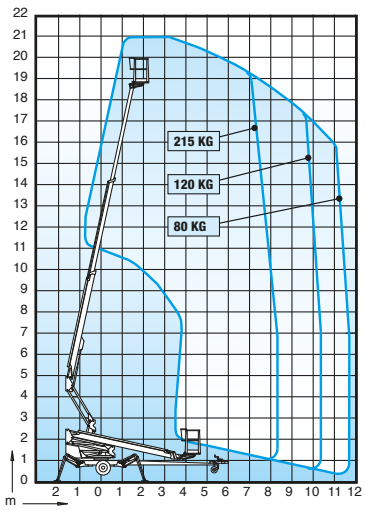

Max. working height	21.00 m
Max. platform height	19.00 m
Max. outreach	11.70 m
Support width	3.9/4.3 m
Lifting capacity	215 kg
Basket size	0.70 x1.30 m
Boom rotation	cont.
Basket rotation	180°
Boom control	proport.
Transport length	7.95 m
Transport width	1.93 m
Transport height	2.29 m
Weight	2465 kg
Driving system	std
AC-socket in the basket x 2	std
Electro motor	std
Petrol power pack	std
Diesel power pack	opt.
Gradeability	25%

Courtesy of Crane.Market

DINO® 260XTD

- **Driving, operation of outriggers and boom movements from the basket**
- **Automatic leveling as standard**
- **Honda engine as standard**

Technical data

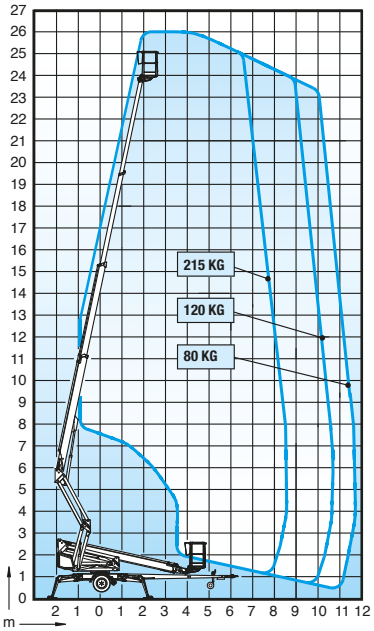

Max. working height	26.00 m
Max. platform height	24.00 m
Max. outreach	11.70 m
Support width	4.40/4.85 m
Lifting capacity	215 kg
Basket size	0.70 x 1.30 m
Boom rotation	cont.
Basket rotation	90°
Boom control	proport.
Transport length	8.11 m
Transport width	2.05 m
Transport height	2.43 m
Weight	3495 kg
Driving system	std
AC-socket in the basket x 2	std
Electro motor	std
Petrol power pack	std
Diesel power pack	opt.
Gradeability	25%
Drive from the basket	std

Trust us to reach higher.

Dinolift Oy / 8.4.2015

Dinolift Oy is a Finnish company that manufactures and sells high-quality DINO aerial work platforms since 1974. DINO platforms allow you to work above ground safely and effectively, while offering an enjoyable user experience from ground up. DINO lifts have been sold to more than 40 countries around the world, with exports accounting for 75% of production. The company's main markets are in the Nordic countries and in northern Europe.

Technical specifications are subject to change without prior notice.

Courtesy of Crane.Market