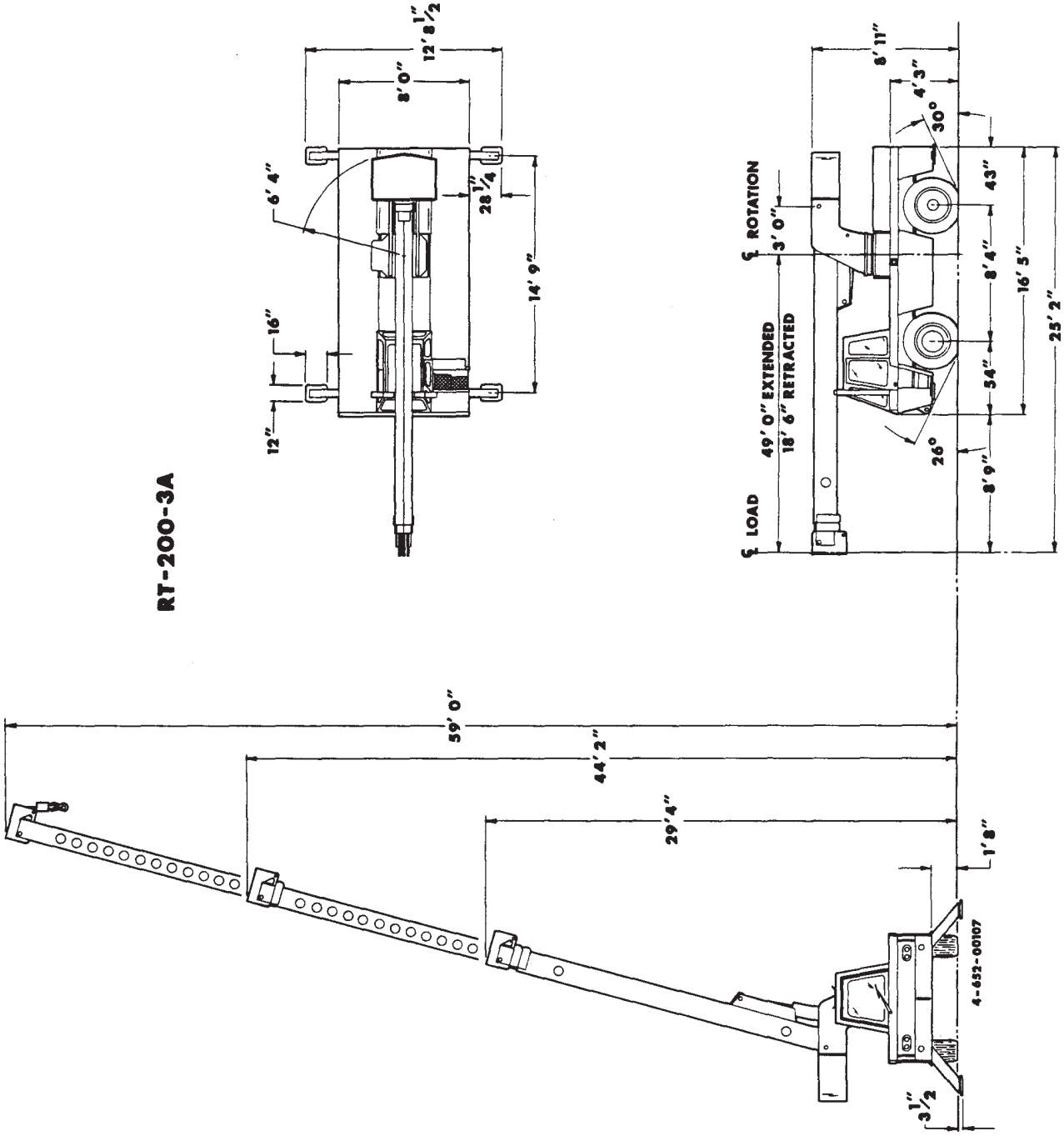

Courtesy of Crane.Market