PRINTED IN USA
P/N 990-30170

OPERATION AND MAINTENANCE MANUAL IC-400-3A

OWNER:_____

_____

_____

SOLD AND SERVICED BY:_____

_____

_____

MODEL NO. _____SERIAL NO. _____

BRODERSON MANUFACTURING CORP.

STATEMENT OF WARRANTY FOR MOBILE CRANES

Broderson Manufacturing Corp. ("BMC") warrants its products to be free from defects in material or workmanship at the date of shipment from BMC. This warranty shall be effective only when validated by the return to BMC of it's standard form of Warranty Validation Certificate, duly completed and signed by the original purchaser from BMC and any subsequent purchaser who buys a BMC product as a new product, and then only as to defects reported to BMC in writing within 1 year or 2000 hours, whichever occurs first, from the date a product is placed in service, as evidenced by such warranty validation certificate. **THIS WARRANTY APPLIES TO ALL PARTS OF BMC'S PRODUCTS EXCEPT ENGINES, DRIVE TRAINS, HYDRAULIC SYSTEM COMPONENTS, OR ACCESSORY EQUIPMENT, WITH RESPECT TO WHICH BMC MAKES NO WARRANTY OF MERCHANTABILITY OR FITNESS FOR A PARTICULAR PURPOSE AND NO OTHER WARRANTY OF ANY KIND, EXPRESS OR IMPLIED**; the sole warranties, if any, with respect thereto being those made by the respective manufacturers thereof.

THE SOLE REMEDY FOR BREACH BY BMC OF THIS WARRANTY SHALL BE THE REPLACEMENT OF ANY PARTS OF ITS PRODUCTS WHICH WERE DEFECTIVE AT THE DATE OF SHIPMENT OR, IF (AND ONLY IF) REPLACEMENT OF DEFECTIVE PARTS IS IMPOSSIBLE OR IS DEEMED BY BMC TO BE IMPRACTICAL, REPLACEMENT OF THE ENTIRE PRODUCT OR, AT BMC'S OPTION, REFUND OF THE PURCHASE PRICE. The replacement remedies include labor in connection with the removal of defective parts and the installation of their replacements, as well as the cost of delivery and transportation of defective products or parts and the replacements thereof. The sole purpose of these remedies is to provide the purchaser with free replacement of defective parts or, in the limited circumstances specified, replacement of the entire product or a refund of the purchase price. These exclusive remedies shall not be deemed to have failed of their essential purpose so long as BMC is willing and able to replace defective parts or the entire product or to refund the purchase price. The remedies herein provided shall be available only if BMC is given reasonable access to the product, including all allegedly defective parts, promptly after the defect is discovered. BMC shall have the right to return any allegedly defective parts to its plant or any other location selected by it, for inspection and testing to determine whether they were defective at the date of shipment, prior to replacement thereof.

The warranty herein made is extended only to the original purchaser from BMC and any subsequent purchaser who buys a BMC product as a new product. **WITHOUT LIMITING THE GENERALITY OF THE FOREGOING, BMC EXPRESSLY DISCLAIMS THAT THE WARRANTY MADE HEREIN EXTENDS TO A PERSON WHO RENTS OR LEASES ANY BMC PRODUCT OR WHO PURCHASES ANY BMC PRODUCT AS A USED PRODUCT.** For purposes hereof, a BMC product shall conclusively be deemed "used" after the expiration of twelve (12) months from its placement in service, as evidenced by a duly completed and signed warranty validation certificate actually received by Broderson, or after such earlier time as it has been operated for more than one hundred (100) hours. BMC shall have no liability hereunder with respect to products which have been subjected to misuse, negligence, accident or other external forces which may have caused or accentuated any apparent failure of such products to conform to the warranty herein made.

BMC does not warrant any of its products to meet any state, local or municipal law, ordinance, code, rule or regulation. The purchaser must assume the responsibility for maintaining and operating the products which are the subject of this warranty in compliance with such of the foregoing as may be applicable, and BMC shall not be liable for the purchaser's failure to meet such responsibility.

THE WARRANTY HEREIN MADE IS IN LIEU OF ANY OTHER WARRANTY, EXPRESS OR IMPLIED. BMC MAKES NO WARRANTY OF MERCHANTABILITY OR FITNESS FOR A PARTICULAR PURPOSE, OR ANY OTHER EXPRESS OR IMPLIED WARRANTY OF ANY KIND, TO ANY PURCHASER, LESSEE OR RENTER OF NEW OR USED BMC PRODUCTS OR ANY OTHER PERSON WHATSOEVER. NO PERSON IS AUTHORIZED TO ACT ON BEHALF OF BMC IN MODIFYING THE WARRANTY HEREIN MADE OR IN MAKING ANY ADDITIONAL OR OTHER WARRANTY.

IN NO EVENT SHALL BMC BE LIABLE FOR INCIDENTAL OR CONSEQUENTIAL DAMAGES OF ANY KIND WHATSOEVER. THIS EXCLUSION OF INCIDENTAL AND CONSEQUENTIAL DAMAGES IS INTENDED TO BE INDEPENDENT OF ALL OTHER PROVISIONS OF THIS STATEMENT OF WARRANTY AND SHALL BE GIVEN FULL EFFECT NOTWITHSTANDING THE UNENFORCEABILITY OR FAILURE OF THE ESSENTIAL PURPOSE OF ANY OTHER PROVISION OF THIS STATEMENT OF WARRANTY.

THE FOREGOING DISCLAIMERS OF WARRANTIES AND DISCLAIMER OF LIABILITY FOR INCIDENTAL OR CONSEQUENTIAL DAMAGES SHALL BE EFFECTIVE REGARDLESS OF WHETHER THE EXPRESS WARRANTY CONTAINED HEREIN BECOMES EFFECTIVE AS PROVIDED IN THE FIRST PARAGRAPH HEREOF.

TABLE OF CONTENTS

SECTION 3 MAINTENANCE

BRODERSON MANUFACTURING CORPORATION

IC-400-3A INDUSTRIAL CRANE

INTRODUCTION

The Broderson IC-400-3A was designed and built to provide safe dependable and efficient crane service. This we warrant by our testing and quality control procedures. To properly utilize the full potential of the equipment, the following customer controlled conditions must exist:

1. The operator must understand the equipment.
2. The operator must know the operating characteristics.
3. The operator must observe the safety rules.
4. The equipment must be given proper maintenance.

This manual was written to provide information required for these conditions. The recommendations for periodic inspection, test and maintenance are minimum standards for safe and economical performance.

When ordering parts, the unit serial number, unit model number, part number, part description and quantity must be provided.

This unit must not be altered or modified without written factory approval.

To reorder this manual, ask for IC-400-3A Operation and Maintenance Manual, Part Number 990-30170. Contact your Broderson Service Representative at:

Broderson Manufacturing Corp.
P.O. Box 14770
Lenexa, Kansas, 66285 U.S.A.
913-888-0606

NOTICE

If this crane becomes involved in an accident, please call Broderson Manufacturing Corp. at 913-888-0606, and ask for the Legal Department, or the Service Manager. Also, please notify your Broderson dealer.

IC-400-3A DIMENSIONS

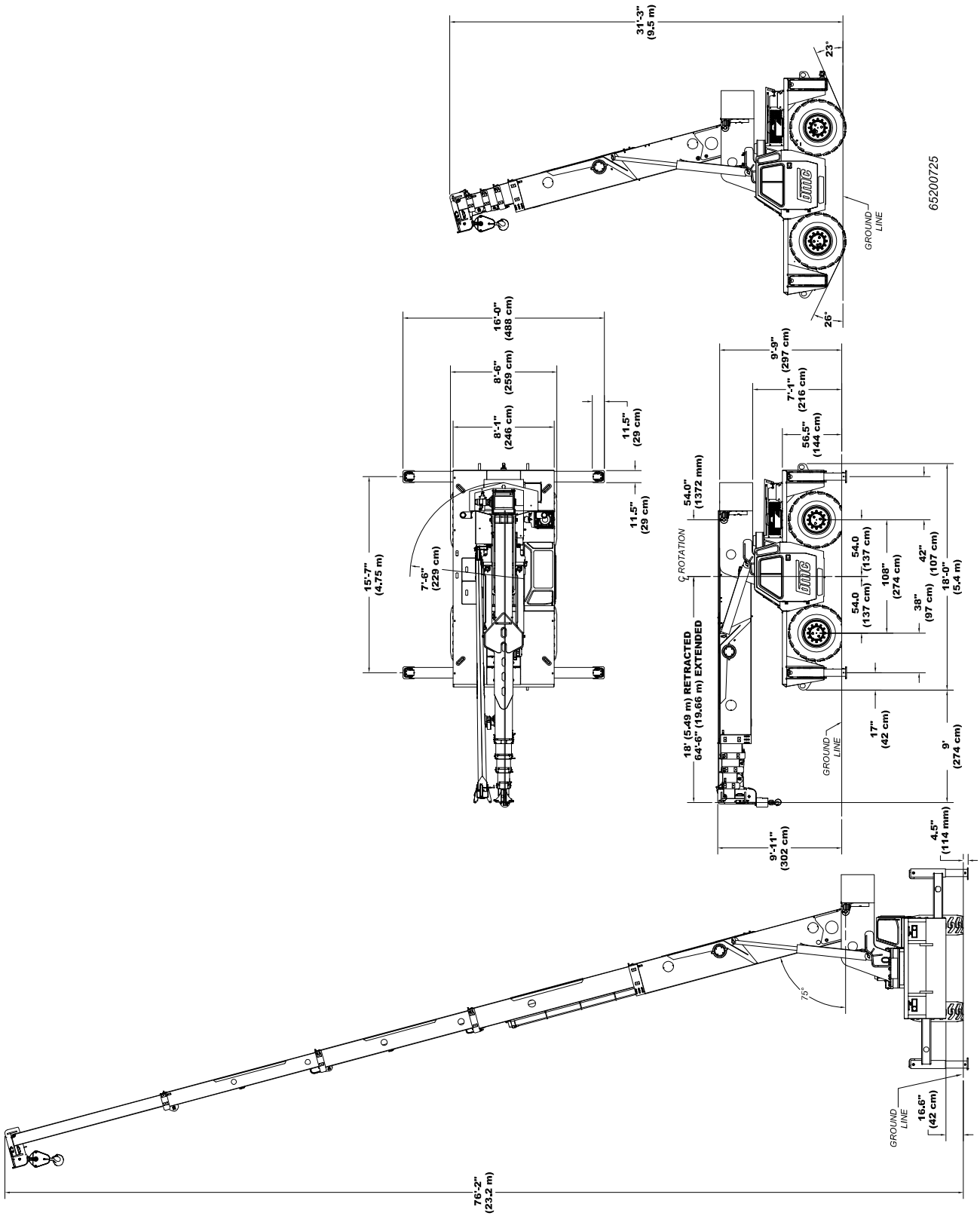

IC-400-3A TURNING DIMENSIONS

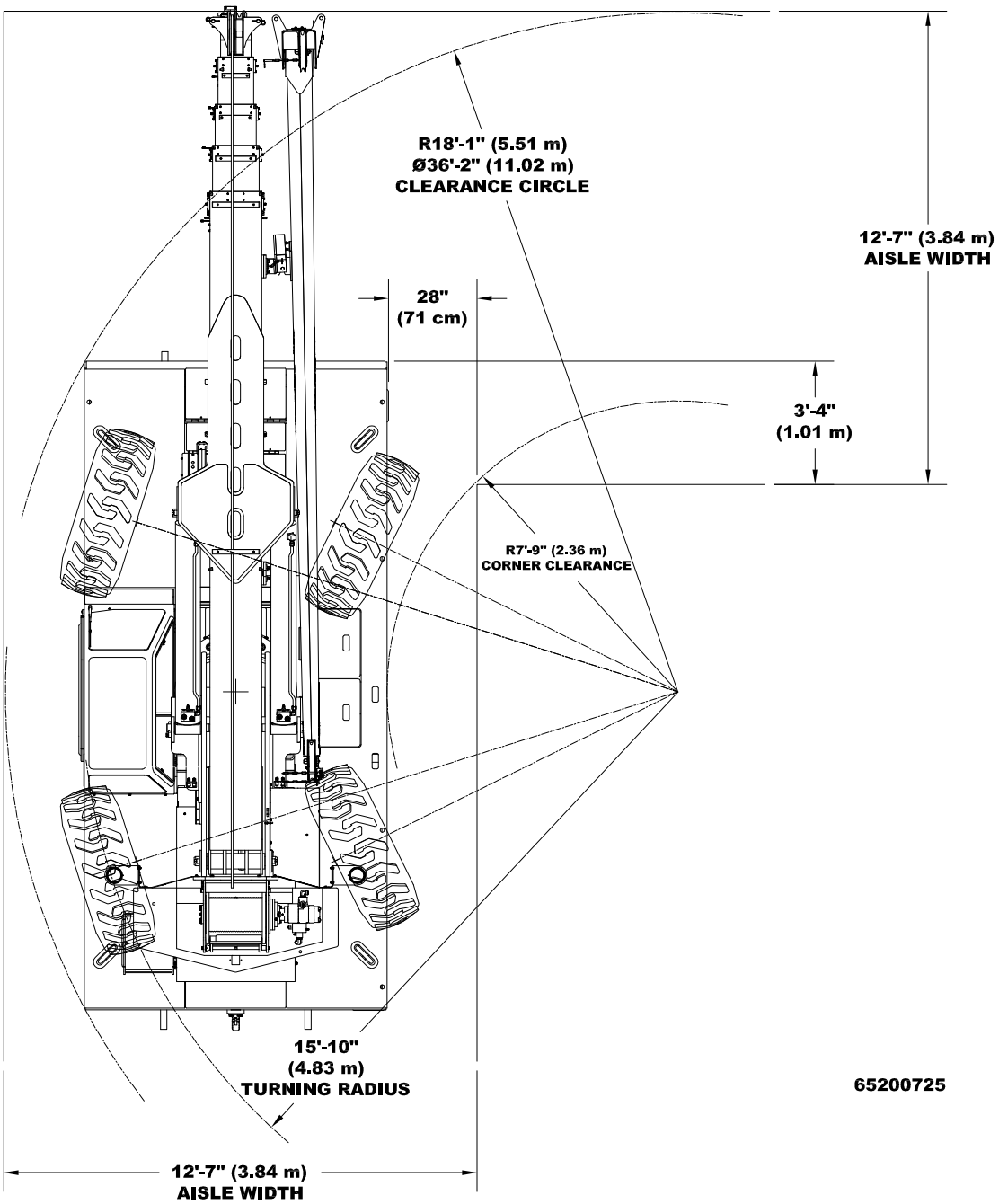

SECTION 1

DESCRIPTION AND SPECIFICATIONS

The IC-400-3A is a self-propelled Industrial Crane designed for lifting and material handling, with special features of self-loading cargo decks, 4-wheel steer, and 4-wheel drive. The basic unit consists of a chassis and hydraulic boom assembly. The chassis includes a frame, four hydraulic independently controlled outriggers, engine, 6-speed transmission, front steering-driving axle and rear steering-driving axle, fuel tank, hydraulic oil tank, control station, three-mode full-power steering, power brakes, all weather cab and lighting package. The boom assembly includes a hydraulic powered continuous rotation turret, 5-section telescopic boom, hydraulic boom elevation cylinders, hydraulic boom telescope cylinders and hydraulic powered planetary gear hoist. Rated Capacity Limiter (RCL) is standard.

IC-400-3A:

5-section hydraulically extended boom with capacity of 50,000 pounds (22700kg) at an 8-foot (2.4m) load radius. Horizontal reach of 64 feet (19.51m) and vertical reach of 75.3 feet (22.95m).

General:

Length:	
Overall	27 feet 4 inches (8.32m)
Chassis	18 feet 0 inches (5.49m)
Width:	8 feet 6 inches (2.59m)
Height:	
Overall	9 feet 11 inches (2.96m)
Deck	56.5 inches (1.44m)
Wheelbase:	108 inches (2.74m)
Ground Clearance:	
Chassis	16.6 inches (42cm)
Minimum (Tailpipe)	13.8 inches (35cm)
Angle of Approach:	26 degrees
Angle of Departure:	23 degrees
Outriggers:	
Spread	16 feet 0 inches (4.88m)
Penetration	4.5 inches (114mm)
Boom Movement:	
Rotation	Continuous
Elevation	0 to 75 degrees
Telescope	46.5 feet (14.17m)
Boom Speeds:	
Rotation	0.7 RPM
Elevation	30 seconds
Telescope	56 seconds
Hoist Line Speeds:	
Low-Speed Mode:	123 ft./min. (37 m/min.)
High-Speed Mode:	300 ft./min. (91 m/min.)

General: (cont'd.)

Extension:	**W/O Boom Extension**	**With Boom Extension**
Sheave Height (Nominal):	75 feet 4 inches (22.95m)	95.0 feet (28.96m)
Horizontal Reach:	64 feet 6 inches (19.51m)	84.5 feet (25.76m)

Weight:

Total	54,900 pounds (24900kg)
Front Axle	29,400 pounds (13330kg)
Rear Axle	25,500 pounds (11570kg)

Turning Radius: (4-Wheel Steering) 15 feet 10 inches (4.83m)

Aisle Width for 90° Turn 12 feet 7 inches (3.84m)

Steering Modes Rear Steer, Round Steer, Crab Steer

Road Speed 25 MPH (40.2km/h)

Drawbar Pull 30,000 pounds* (13600kg)

Gradeability 70 percent* (34 degrees)

*Calculated, Wheels spin below these values in 2-wheel drive.

Grade Limit 19 percent (11 degrees)

Engine:

Standard:

Cummins - QSB4.5 Turbo EPA Tier 3:

Cummins Model QSB4.5 diesel engine, turbocharged, charge air cooled, four cylinder, 4.5 liter (275 CID). U.S. EPA Tier 3 certified. Bore 4.21 inches (107 mm), stroke 4.88 inches (124 mm). Rated 160 hp (119 kw) at 2,500 rpm. 460 foot pounds (624 Nm) maximum torque at 1,500 rpm. 95 amp alternator. Oil capacity, 11.6 quarts (11 L). Coolant capacity, 14 quarts (13.2 L). Electronic controls for three engine speeds during crane operation – 700, 1200 or 1800 rpm. Protection system shuts down engine when coolant is too hot or oil pressure is too low. Charge air cooler, grid heater and engine block heater which plugs into 120 volt AC extension cord are included. Tier 3 engines require the use of Low Sulfur Diesel (LSD) that meets the EPA defined sulfur content of 500 parts per million (ppm). Tier 3 engines may also use Ultra Low Sulfur Diesel (ULSD) fuel that meets the EPA defined sulfur content of 15 ppm.

Optional Engine Accessories:

Spark Arrester Muffler:

Spark arrester muffler used in addition to standard muffler. Net Weight: 10 pounds (5kg)

Transmission:

Standard:

Funk Manufacturing Co. Model 2000 powershift transmission with 6 forward speeds and 3 reverse. Provides full powershifts at maximum engine speed in all gears. All shifting is done with a single-lever electrical control in the operator compartment. The transmission includes an automatic rear axle disconnect for two-wheel drive in speeds 4, 5 and 6 in forward and speed 3 in reverse. The other speeds are four-wheel drive. A torque converter with a stall torque ratio of 2.640:1 attaches directly to engine flywheel to drive transmission. Equipped with oil cooler and filter.

Forward gear ratios and speeds:

GEAR	RATIO	SPEED
1st	8.20	2.7 mph (4.3 km/h)
2nd	4.64	4.8 mph (7.7 km/h)
3rd	3.53	6.3 mph (10.1 km/h)
4th	2.00	11 mph (18 km/h)
5th	1.41	15 mph (25 km/h)
6th	0.80	23 mph (37 km/h)

Reverse gear ratios and speeds:

GEAR	RATIO	SPEED
1st	8.20	2.7 mph (4.3 km/h)
2nd	3.53	6.3 mph (10.1 km/h)
3rd	1.41	15 mph (25.4 km/h)

Front Axle:

Standard:

AxleTech planetary driving-steering axle with 16.42 to 1 ratio. Rigid mounted on front. Axle has limited-slip differential.

Rear Axle:

Standard:

AxleTech planetary driving-steering axle with 16.42 to 1 ratio. Rear axle is mounted with rubber elements to allow oscillation. Axle is not available with no-spin or limited-slip differential.

Brakes:

Standard:

Service brakes are four-wheel hydraulic disc brakes. 18.48 inch (46.9 cm) diameter disc at each wheel. System includes two 0.5 gallon (1.9 L) accumulators, unloading valve, and brake malfunction warning light. Parking brake is disc-type, spring applied, and hydraulically released. Mounted on front drive shaft at transmission.

Steering:

Standard:

Hydraulic steering unit with two 3.5 inch (8.9 cm) cylinders attached to each axle. Allows limited steering when engine is not running. A switch on the control panel is used to select rear-wheel steering, 4-wheel steering or crab steering. Electronic sensors and control box automatically align the steering when a new mode is selected. Steering wheel and electronically controlled selector valve control 3-mode steering.

Tires:

Standard:

17.5 x 25, 20-ply rating, mud lug.

Optional Tires:

Spare Wheel and Tire:

Standard Size: Extra wheel with 17.5 x 25, 20-ply rating tire mounted, ready for service. Order left hand or right hand. Net Weight: 530 pounds (240 kg)

Chassis:

Standard:

Cargo Deck:

Total Deck Area: 74 square feet (6.94m^2). Front deck 96.5” (2.45m) X 69.6” (1.77m), RH side deck 203.7” (5.17m) X 29.4” (75cm). A maximum of 20,000 pounds (9100kg) may be carried on the deck when centered over or between axles. Six stake pockets are provided along edges of deck for 1-inch (25mm) pipe stakes. Stakes furnished. Cargo decks have skid resistant coating.

Headlight and Taillight Grilles:

Steel protective grilles for headlights and taillights. Easily removable for replacing bulbs.

Outriggers:

Four hydraulic out-and-down outriggers of box-beam construction. Independent controls for each outrigger. Hydraulic cylinders are equipped with direct-connected holding valves. Pad dimensions: 11.5 inches (29cm) x 11.5 inches (29cm).

Pulling Eyes:

Two heavy duty lugs on front bumper provide for attachment of hook block so main winch line can be used for pulling loads at or near floor level. Also for anchoring tag lines from load on hook. Two heavy duty eyes on rear bumper allow dragging or towing a load.

Tie Downs:

Pulling eyes also provide tie down locations for transporting crane by truck or cargo container.

Accessory Storage Box:

Consists of a hinged front deck plate which serves as a lockable cover, and box for carrying downhaul weight and other items. Storage box is 14" (35cm) deep x 10.25" (26cm) long x 68" (1.7m) wide.

Sheave Block Storage Box:

Recessed area in left-rear deck behind cab for stowing sheave block. Sheave block is stored with the hook on top for easy lifting and lowering into storage box. Includes pin assembly for securing sheave block.

Lifting Rings:

Consists of four rings, one at each corner of the load deck, so sling can be attached for lifting crane. Rings hang below deck surface when not in use.

Sliding Hood:

Allows improved access to engine with boom centered over the front of machine. Engine fluid levels can be checked without starting engine and swinging boom.

Chassis Options and Accessories:

Auxiliary Winch:

Optional planetary gear winch, mounted on front outrigger bumper, with a single-lever control in the operator compartment. Hydraulic powered to provide bare drum line pull of 15,000 lbs (6800 kg) and 40 ft/min (9 m/min) line speed on the fourth layer. Winch drum is 4.75 inches (12 cm) diameter by 9 inches (23 cm) long. Includes 125 feet (38.1 m) of 9/16 inch (14 mm) diameter 6x36 EIP-RRL-IWRC wire rope, minimum breaking force 33,600 pounds (150 kN). Also includes 10,000 lb (4500 kg) eye hook. A pintle hook is recommended for two-parting the line with a sheave block (pintle hook and sheave block not included). Winch is mounted to heavy-duty bracket with hook storage feature. Net weight: 580 pounds (265 kg)

Pintle Hook - Rear:

T-60-AOL Holland pintle hook mounted on rear frame member, provides capacity for 6,000 pound (2700kg) tongue weight and 30,000 pound (13600kg) trailer weight. Net Weight: 15 pounds (7kg)

Pintle Hook - Front:

T-60-AOL Holland pintle hook mounted on front frame member, provides same capacity as rear pintle hook. Net Weight: 15 pounds(7kg)

Rearview Mirrors:

One right-hand and one left-hand mirror, 6" (152mm) wide x 16" (406mm) high, mounted on deck stakes. Pivot out of way when contacted by obstacle at side of deck. Net Weight: 12 pounds (5kg)

Operator Compartment:

Standard:

Operator control station provides one-position access to all chassis and crane functions. Includes adjustable operator's seat and seat belt, arm rests and tilt steering column. Also includes access point to J1939 CAN Bus System.

Drum Rotation Indicator:

Provides tactile feedback to operator when hoist drum is rotating. Feedback device attached to hoist control handle Feedback is proportional to hoist speed.

All Weather Cab:

Consists of rigid mounted canopy section with safety glass and removable hinged door. Door is equipped with a keyed lock to protect operator's station. Includes defroster fan, dome light, heater with 2-speed fan, 12V electric windshield wiper, electric windshield washer, 12-volt power outlet. There are sliding windows in the door and right-hand side. Emergency Exit thru rear window.

Air Conditioning:

Provides factory system using R134a refrigerant. Compact AC unit mounted in operator area, fan cooled condenser mounted on hood and belt driven compressor with magnetic clutch driven by engine.

Electronic Controls:

Dual two-axis joysticks provide control of boom motions and hoist. Triggers prevent inadvertent boom motion. Key pad on dash controls outrigger functions. Rocker switch separates boom function from outrigger functions.

Operator Compartment Options and Accessories:

Floor Mat:

Vinyl mat with foam backing covers floor, front wall and under seat compartment of operator's compartment. Net Weight: 5 pounds (2kg)

Noise Reduction Kit - Cab:

Includes vinyl floor mats and side panels of foam-backed, perforated vinyl for noise reduction. Net Weight: 15 pounds (7kg)

Sun Visor:

Adjustable sun visor for reducing glare mounted in roof of cab. Net Weight: 5 pounds (2 kg)

Electrical System:

Standard 12 Volt DC:

Battery:

Diesel Units: Group 49 with 850 CCA rating.

Lighting Group:

Consists of two 12V-lamps, with high and low beams for driving; tail, brake and turn signal lights and backup lights in rear; front turn signals and emergency flasher switch at operator's station. 12V horn actuated by button located on turn signal lever.

Dash Display:

In-dash LCD screen shows engine data including RPMs, coolant temperature, battery voltage, fuel level, engine oil pressure, percent of engine max load, boost pressure for the turbo, and rate of fuel consumption. Display also shows time and hourmeter. Hourmeter only records during actual engine operation. Display can also show engine fault codes and control system faults. Screen also indicates hydraulic oil temperature. During crane set up, it shows crane level-sensor data similar to a bubble level. Also included are lights for engine warning, engine shutdown, hoist high-speed mode, mid-range hydraulic speed (reduced speed mode), and hoist minimum wrap (if equipped).

Indicator Lights:

Located at operator's station, includes warning lights for transmission filter, control faults, and emergency-stop. Also include indicator lights for turn signals, high beams, hazard lights, crane levelness, parking brake, boom enable, and 4-wheel drive/2-wheel drive.

Back-Up Alarm:

Provides pulsating sound from a 102 dB alarm when ignition is on and transmission is in reverse. Conforms to SAE J994B.

Outrigger Alarm System:

102 dB alarm with alternating two-tone sound is actuated when the OUTRIGGER DOWN, OUTRIGGER BEAMS OUT or OUTRIGGER BEAMS IN controls are operated.

Emergency Stop Switch:

A two-position push button switch located on the top left-hand side of the dash panel. Designed to stop the engine and shut down the hydraulic system.

Optional Electrical Accessories:

Strobe Lights:

Two yellow strobe lights, one on each side of counterweight, for high visibility all around crane. Flashes 60-120 times per minute. Includes operator controlled switch. Net Weight: 15 pounds (7kg)

Boom Work Lights:

Two halogen work lights, one on left side of boom to light boom tip, and one on right side of the turret to light ground under boom tip. Includes switch at operator's station. Net Weight: 10 pounds (5kg)

Rear Work Lights:

Two halogen flood lights mounted between the grille bars in the rear bumper. Includes switch at the operator station. Net Weight: 10 pounds (5kg)

Camera System:

Four cameras mounted about the crane and connected to a display in the cab. Two cameras are positioned to monitor the right-side outrigger foot location. One camera is located to view the wire rope on the hoist drum monitoring rope spooling. One camera is located on the rear bumper to aid in backing up. Display automatically switches to outrigger cameras when outrigger controls are activated. Display automatically switches to back-up camera when transmission is out of neutral. Operator may also manually select camera views. Equipped with automatic compensation for low-light conditions. Net Weight: 20 pounds (9 kg)

Hydraulic System:

Standard:

Triple gear pump, mounted on and driven by the main transmission, delivers 13, 25 and 40 gpm (53, 106 and 151 L/min) at 3,000 psi (207 bar) and 2,500 rpm engine speed. System protected by relief valves, 100 mesh suction-line strainer and two 10 micron return-line filters.

Hydraulic Reservoir:

81 gallon (307 L) capacity, equipped with 10 micron breather filter on top and oil level gauge on side. Oil level gauge is visible by lifting up second hinged panel on the front deck behind the accessory storage box.

Boom:

Standard:

Five-section, high strength steel construction, equipped with lubricant filled bearing pads for efficient support and extension. Double-acting hydraulic cylinders extend and retract the second, third, and fourth stages. Double runs of high-strength leaf chain extend and retract the fifth stage. The second stage extends first and retracts last, controlled by a sequence valve, a solenoid valve, and a proximity switch. The chain system telescopes the third, fourth, and fifth stages proportionally. The telescope cylinders and the double-acting boom elevation cylinders are equipped with cylinder-mounted holding valves. Boom angle indicator is provided on the left side of the boom.

Boom Rotation:

Heavy-duty bearing rotation gear with external teeth supports boom. Rotation is powered by hydraulic motor and worm gear drive. Rotation gearbox may be adjusted as wear occurs to minimize backlash. Boom is attached by steel turret weldment.

Boom Hoist:

Hydraulically-powered turret-mounted planetary gear hoist. Low-speed mode provides a bare-drum line pull of 17,850 pounds (8100 kg) and a speed of 123 feet per minute (37 m/min). High-speed mode provides a bare-drum line pull of 7,400 pounds (3350 kg) and a speed of 300 feet per minute (91 m/min). Hoist drum is 10-5/8 inch (270 mm) diameter by 17-1/8 inch (435 mm) long.

Wire Rope:

At least 370 feet (113 m) of 5/8 inch (16 mm) diameter wire rope, 6 X 36-EEIP-RRL-IWRC, minimum 43,750 pounds (195 kN) breaking strength.

Downhaul Weight and Hook:

Downhaul weight and 14,000 pound (6350 kg) rated swivel hook to use with wedge socket on 5/8 inch (16 mm) load line. Specially designed to work with the anti-two-block system and to clamp the dead end of the rope. Weighs 180 pounds (82 kg)

Anti-Two-Block Device:

Prevents damage to hoist rope and/or machine components from accidentally pulling sheave block or downhaul weight against boom tip. Consists of trip arm at boom tip which is moved upward by sheave block or downhaul weight as hook approaches boom tip. Trip arm actuates electric switch which is connected through cable reel mounted on boom to solenoid dump valve control system. This system will stop HOIST RAISE, TELESCOPE EXTEND, BOOM LOWER, SWING LEFT and SWING RIGHT circuits. No other circuits are affected. These circuits are returned to normal operation by operating the HOIST LOWER or TELESCOPE RETRACT control.

Rated Capacity Limiter:

Operational aid that warns operator of impending overload with audible and visual signals. Has read-outs for load, boom angle, boom length and load radius. In the event of an overload, blocks the following boom functions: HOIST RAISE, TELESCOPE EXTEND, BOOM LOWER, SWING LEFT and SWING RIGHT. These circuits are returned to normal by lowering load to a safe resting place with hoist or by retracting or raising boom to a shorter load radius. System may also be used to temporarily set a warning at operator-defined maximum load radius or maximum tip height. There is a key-operated override switch under the dashboard.

Four-Part-Line Sheave Block:

Double sheave block for four-part-line requirements. 12-inch (305 mm) OD sheaves for 5/8 inch (16mm) diameter wire rope. Swivel hook with safety latch. 530 pound (240 kg) weight provides positive overhaul. Includes bar on top to actuate trip arm of Anti-Two-Block Device.

Optional Boom Attachments:

Boom Extension - 20 Ft. (6.1m) Offset:

Provides 20 feet (6.1m) of additional length for lifting loads with load line. Boom extension may be stowed alongside base boom section when not in use. Tip sheave, attaching brackets and pins are included. Deduct 500 pounds (220kg) from Capacity Chart when boom extension is in the stowed position. Includes trip arm for Anti-Two-Block Device. Boom extension will tilt through three positions: in-line, 15 degree offset and 30 degree offset. Net Weight: 775 pounds (350 kg)

RCL with Swing Encoder:

Allows the operator to temporarily set a warning at operator-defined swing positions. Includes a sensor in the slip ring to detect swing position.

Minimum Wrap Cut-out System:

Hoist cut-out system designed to prevent accidental unspooling of rope from hoist drum. HOIST LOWER stops when only 3-5 wraps are left on drum. Indicator light on dash alerts operator.

***** Specifications subject to change without notice *****

OPERATION SECTION

SAFETY RULES

GENERAL:

1. Since the manufacturer has no direct control over machine application and operation, conformance with good safety practice is the responsibility of the owner and operator.

2.

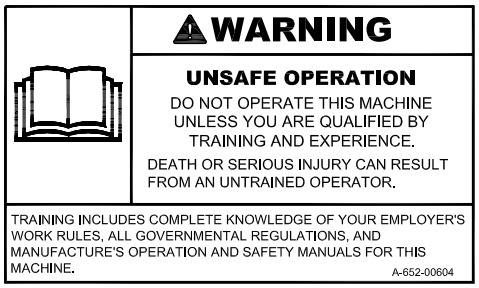

3.

4. The operator shall be responsible for those operations under his direct control. Whenever there is any doubt as to safety, the operator shall have the authority to stop and refuse to handle loads until safety has been assured.

5. The operator shall not engage in any practice which will divert his attention while actually operating the crane.

6. Do not run the engine in an enclosed area or indoors without adequate ventilation.

7. Do not use ether for starting. Ether is highly flammable and can be ignited by the intake manifold heater grid, causing engine damage or operator injury.

8. This list of rules is only a supplement to all federal, state, and local safety rules that may apply.

CRANE CONDITION:

1. Before beginning operation each day, thoroughly inspect the entire crane to be sure it is in good operating condition.

2. Inspect load hoist rope and wedge socket daily. We recommend rope inspection, replacement and maintenance in accordance with ASME B30.5, Sec. 5-2.4.

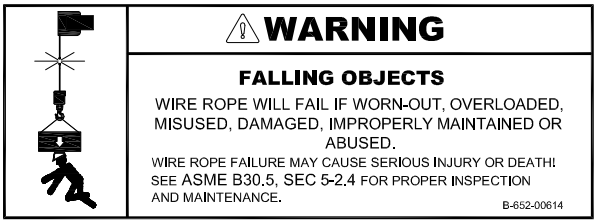

3. Keep operator's compartment and decks free of mud and grease.

4. Keep all window glass clean. Keep gauges and displays clean.

5. Tools, lubricants, or rags on the crane should be kept in a secured toolbox.

6.

7.

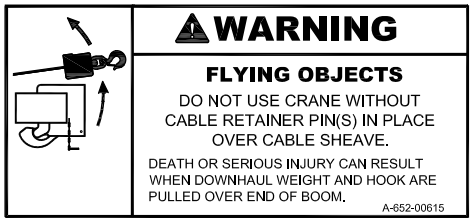

8. The Rated Capacity Limiter must be checked after each setup for the proper operating configuration on the display.

LIFTING:

1. Always refer to Crane Capacity Chart in operator's compartment before handling load. Do not exceed load ratings. Under some conditions the standard capacity ratings cannot be recommended and must be adjusted downward to compensate for special hazards, such as weak supporting ground, wind, hazardous surroundings, operator inexperience, etc. The weight of the load should always be known.

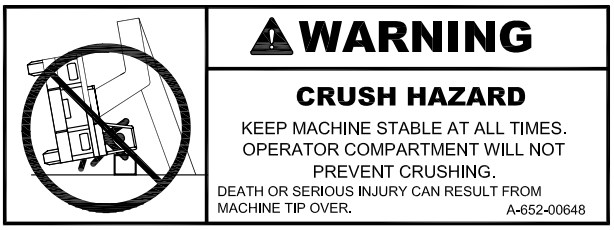

2. Rated Capacity Limiter components must be inspected for damage at the beginning of each shift. The Rated Capacity Limiter must be tested with a known load at least once a month as described in the RCL Operations Manual.

3. Be careful to prevent load swinging. A swinging load can cause instability or loss of control of the load. Be aware that the Anti-Two-Block System and the Rated Capacity Limiter can cause sudden stopping of boom movement, which can cause the load to swing. Swing the boom slowly whenever these systems might stop the boom.

4. Do not allow anyone to put any part of his body under a load. The load may lower or fall if there are damaged parts in the crane. Also, the load may drop a short distance due to thermal contraction of the hydraulic oil in the cylinders.

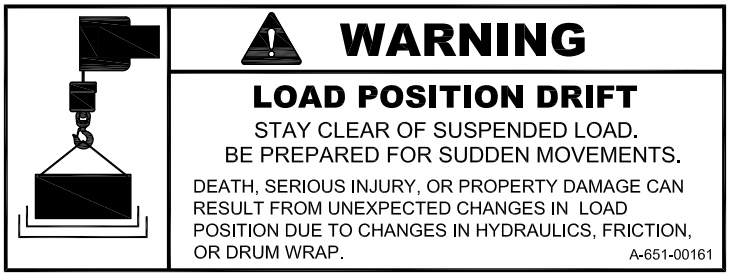

5. Do not use crane to drag loads sideways. Do not use crane to raise grounded or fixed load by using Boom Raise function.

6.

7.

8. Level the crane before lifting. A small incline will significantly reduce the capacity. Use appropriate cribbing under the outriggers for leveling. All outrigger beams must be fully extended and tires must clear the ground to use the OUTRIGGERS OUT & DOWN ratings.

9. Always use outriggers if possible. If you must lift on rubber, keep the load as close to the ground as possible to prevent tipover. Move the load very slowly and use tag lines to prevent load swinging.

10. Crane may tip at less than rated loads if the surface is uncompacted or wet dirt, or soft soil with frozen crust, thin or cracked pavement, or surface near a hole or ledge. Always use adequate outrigger floats and/or cribbing. See page 2-23.

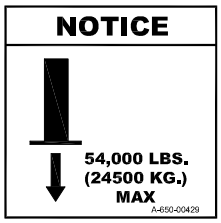

11. The operator shall not leave the controls while the load is suspended.

12. Always use adequate parts of load hoist line for lifting heavy loads.

13. Always be sure the rope is properly seated and wound evenly on hoist drum.

14. Keep hands away from load hoist rope when hoist is being operated.

15. Be sure at least three wraps of rope are left on the hoist drum to ensure against rope pulling out of its anchor.

16. Never wrap the hoist rope around a load. Always use approved rigging.

17. Avoid pinch points such as between a rotating turret and the cab, or in access holes of a telescoping boom, or between the two-block mechanism.

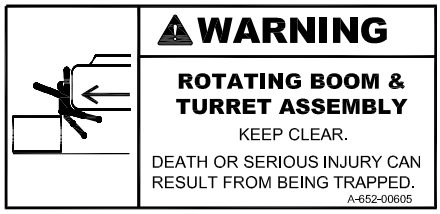

CAUTION

Keep hands out of Anti-Two-Block mechanism. Serious injury can result from moving parts.

18. Avoid two-blocking.
    A. Stop raising hoist line before downhaul or hook block strikes boom tip plates.
    B. Pay out hoist line while extending boom.
    C. Maintain clearance between downhaul weight or hook block and boom tip while booming down.

D A N G E R

Two-blocking will abruptly stop boom lowering and boom swing as well as hoist and extend. If the boom is moving fast, this will cause the load to bounce or swing, which could cause loss of control of load or tipping.

19. The amount of counterweight supplied with this crane should never be changed. Unauthorized addition of counterweight in the field to increase lifting ability constitutes a safety hazard.

20. Always keep crane boom at least 20 feet (6 m) away from any electric power lines of unknown voltage. If voltage is known, use chart on side of turntable to determine required clearance distance. When in doubt, contact local power authority.

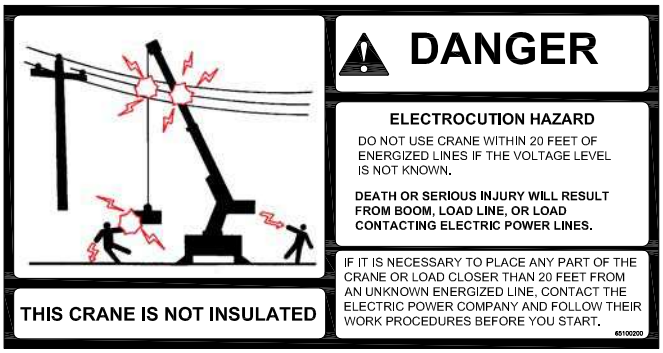

REQUIRED CLEARANCE FOR NORMAL VOLTAGE TABLE

NORMAL VOLTAGE, kV (PHASE TO PHASE)	MINIMUM REQUIRED CLEARANCE, FEET (METERS)
OPERATION NEAR HIGH VOLTAGE POWER LINES	
TO 50	10 (3)
OVER 50 TO 200	15 (4 1/2)
OVER 200 TO 350	20 (6)
OVER 350 TO 500	25 (7 1/2)
OVER 500 TO 750	35 (10)
OVER 750 TO 1000	45 (14)
OPERATION IN TRANSIT WITH NO LOAD AND BOOM LOWERED	
TO 1	4 (1 1/2)
OVER 1 TO 50	6 (2)
OVER 50 TO 345	10 (3)
OVER 345 TO 750	16 (5)
OVER 750 TO 1000	20 (6)

REF. ASME B30.5 - 2011 65100163

21. If boom should accidentally contact a power line, keep ground personnel away from crane. Stay in the crane until the power source is de-energized. Move the crane away from electrical hazard if this does not cause new hazards. If it is absolutely necessary to leave the crane, **jump** clear of the crane with both feet together. Hop away from the crane keeping feet together. The ground surface may be energized.

22. Do not operate outside during thunderstorms. Avoid all lightning strike opportunities. Consult local weather reports during inclement weather conditions.

23. Crane has four lifting rings, one at each corner of load deck, for lifting the crane. Use proper slings and rigging methods to keep the load balanced during the lift. Do not lift by the boom. Proper lifting and securing practices are the responsibility of the rigger in charge.

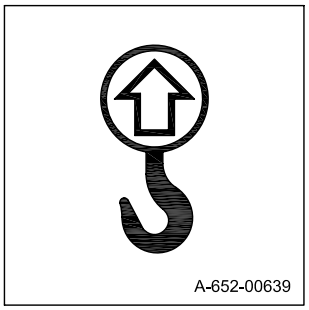

24. When transporting the crane, be sure it is properly secured to the vehicle. Utilize the tie-down anchors as indicated on the crane to stabilize the load and prevent shifting during transport. Use caution to not over-tighten the chains and binders when securing the crane to the transport vehicle. Proper securement and prudent shipping practices are the responsibility of the carrier.

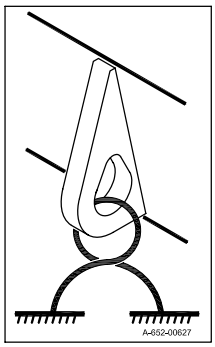

TRAVEL:

1. For Pick and Carry operation: Traveling with suspended loads involves so many variables, such as ground conditions, boom length and vehicle acceleration, that it is impossible to devise a single standard rating procedure with any assurance of safety. For such operations, the user must evaluate prevailing conditions and determine safe practices using precautions, such as the following:

    A. The boom shall be centered over front axle.
    B. Use shortest boom practical.
    C. Carry load as close to ground as practical.
    D. Reduce travel speed to suit conditions [2 MPH (3 km/h) maximum].
    E. Maintain specified tire pressures and lug nut torques.
    F. Avoid sudden starts and stops.
    G. Provide tag or restraint lines to restrict the swinging of the load.
    H. Hand-held tag lines should be nonconductive.
    I. Do not carry heavy boom loads and deck loads at the same time.
    J. Do not pick and carry with boom extension installed.
    K. Do not exceed the OVER FRONT, ON RUBBER capacity.

2. When raising the boom or moving the unit with boom elevated, be sure there is adequate overhead clearance for boom.

3. For carrying loads on decks:
    A. Boom must be retracted, centered and lowered as close as possible.
    B. 2 MPH (3km/h) maximum road speed. Reduce speed below 2 MPH (3km/h) to properly match condition of road surface and deck load stability.
    C. Remove load hook from load before traveling.

4. Cranes with rear steering require close watch because of "tail swing" when the chassis is turned in tight quarters.

5. 

6. Every effort has been made to make the BMC Industrial Crane a stable vehicle. However, with the rigid front axle and the isolated rear axle suspension, the operator must take care to control the vehicle speed to be compatible with conditions of rough roads or uneven terrain.

7. When this crane is to be parked on a grade, set parking brake and block wheels or extend outriggers fully.

CAUTION

Do not allow fuel tank to become empty. The engine will be difficult to restart and may require "bleeding" of diesel injectors. Keep fuel tank full when idle to prevent condensation in tank.

8. Shut off engine before refueling, and remove fuel cap slowly. Vapor pressure in tank can cause a burst of fuel and vapor when the cap is removed. Always refuel with proper fuel and into proper tank.

9. Know your visibility limitations. Loads being carried on the deck or hanging on the hook can add further limitations to visibility during travel. Always use a signal person when in doubt.

10. Boom functions are usable during travel but at reduced speeds.

INSTRUMENTS AND CONTROLS

The IC-400 instrument panel is equipped with an engine monitor display that includes warning lights and push buttons to change display screens. The display includes an hourmeter, engine oil pressure, high coolant temperature, fuel level, system voltage, and tachometer. On separate display screens the hydraulic oil temperature and a bubble level are also included in the engine monitor display among a number of other parameters. The warning lights are hidden in the bezel of the display until they are energized. They include engine warning (left amber), engine stop (left red), hoist high speed (right green), mid-range speed (right amber), and optional minimum wrap (right red). The four push buttons will have labels or icons just above them when the button is active.

In addition, there are other dash indicator lights for turn signals, high beam, park brake set, level condition, transmission filter, control system faults, outriggers, boom enable, and two-wheel/four-wheel drive.

The ignition switch is key operated and has OFF, RUN and START positions. The ignition switch should always be turned off and the key removed when the vehicle is left unattended. A horn button is on the turn signal lever. There are twist knobs on the left hand dash to control the fan speeds of either the defroster fan or the AC/Heater unit. These are both two (2) speed fans with an Off position.

The BMC IC-400 is equipped with a standard lighting package. The on-off rocker switch is located on the right hand dash panel and dimmer switch is located on the left hand steering column control. Move lever forward for High Beams; pull back for Low Beam head lights. Stop lights are controlled by operating the foot brakes. The turn signal control is also located on the left side of the steering column. Moving the lever down indicates a left turn; up indicates a right turn. The emergency flasher lights are actuated by a rocker switch on the instrument panel on the right hand side.

The turn lever on the left also contains controls for the two-speed windshield wipers. Rotating the center collar will change speeds. Rotating back to the ‘0’ will park the wiper blade. The windshield washer is activated by the large momentary button at the end of the turn lever. Pushing in will energize the washer pump and the wiper blade at the same time. Releasing the button stops the washer and allows the wiper blade to park. The horn is the small momentary button at the end of the lever. The steering column provides a tilting feature and hold lever on the right hand side to hold the column in the preferred position for the Operator.

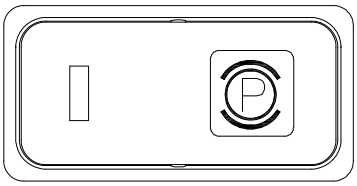

The park brake switch is located on the right side dash panel. To apply, push the rocker switch to the right and the switch itself will light up. A separate warning light next to the right turn signal shows when the park brake is applied. The foot brake and accelerator pedals are located and operated as they are in other vehicles already familiar to the operator.

The powershift transmission control lever is located on the right hand dash. The shifting pattern is shown on the control unit. There are six forward speeds and three reverse speeds. The shifter is an electronic control. There is no clutch pedal. The transmission and drive train components can be damaged by shifting from forward to reverse or vice versa while the unit is in motion, or while the engine speed is above 1000 RPM. The shift lever must be in neutral to start the engine. The parking brake switch prevents driving with the brake on.

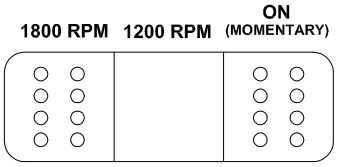

HIGH IDLE CONTROL ROCKER SWITCH

Normal engine speed control uses the foot accelerator pedal. A three position switch on the right dash panel provides preset engine speeds. Parking brake must be set to activate system. Press the high idle control switch temporarily to the right, the engine will lock into the preset levels. The center position of the switch enables the engine to dwell at 1,200 RPM. The left switch position will increase the engine speed to 1,800 RPM. To restore the foot accelerator, temporarily release the parking brake with the transmission in neutral. Turning the engine off will also restore the foot pedal.

Lights on the right hand dashboard indicate two-wheel or four-wheel drive operation. Four-wheel drive is automatically disengaged in forward gears 4, 5 and 6 and in reverse gear 3. Avoid four-wheel drive operation on pavement except for short distances.

THREE MODE STEERING FUNCTIONS

The IC-400 is equipped with three-mode steering: Four-wheel round steering can be used for making tight turns; two-wheel rear steering should be used for traveling long distances; crab steering can be used for maneuvering in tight places. A switch on the dashboard sets the mode. Electronic sensors and controls automatically align the wheels when a new mode is selected, as the wheels are steered past the centered position. The steering wheel is directly mounted to the steering control unit of the all-hydraulic power steering system. The steering system will provide limited steering even if the engine should stop running.

CONTROL VALVE FUNCTIONS

The control valves for the IC-400 utilizes an electrohydraulic system where the actual valves are not mounted in the cab. The system is divided into two sets of controls. One set designed to operate the outriggers is located on the left hand dash panel in the form of an eight button pad. Each button is a dual action button and can operate either the Beams (In or Out) or the Jacks (Up or Down). The dash pad is electronically connected to remote mounted outrigger valves.

The other set of controls for operating boom rotation, boom elevation, boom extension and hoist are actuated by two, 2-axis joysticks mounted to each arm rest. The joystick handles are electronically connected to the remote mounted hydraulic valves. A trigger lever is provided on each handle to serve as the handle interlock. Boom functions will not operate unless the trigger lever is squeezed before moving the joysticks out of center. Releasing the trigger while the handle is not centered will result in an abrupt stop.The placards located in front of the joystick handles identify the function and direction resulting from each handle movement.

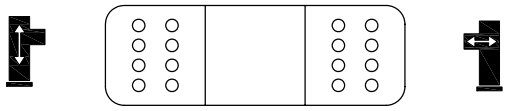

Both sets of controls are separated by the Boom Enable rocker switch located at the top of the right hand dash panel. In the center position, the joystick levers are energized and allow full control of all boom functions and the Hoist. A green light above the switch is lit as a reminder. Any time Boom Enable is ON, the outrigger button pad is de-energized and does not allow accidental outrigger movement. When the Boom Enable switch is pressed either to the left or right, the outrigger button pad is energized to allow either the Beams (pushed to the right) or the Jacks (push to the left) to operate. The joystick levers will now be de-energized to prevent any accidental boom movements during outrigger operations.

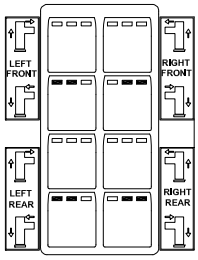

Outriggers: An eight-button pad is mounted to the left-hand dash panel for controlling the direction of outriggers on each corner of the machine. The eight buttons are paired together giving two directions for each outrigger. Two out of four outrigger button pairs may be operated simultaneously or individually with the exception of Beams Out. However, opposite directions cannot be operated simultaneously. Whichever button is actually pushed first will dictate the direction the outrigger goes.

<u>CAUTION</u>
Special attention must be given to avoid hitting personnel or obstacles.

These buttons only work when the Boom Enable rocker switch on the right dash panel is placed in the Beam position or the Jacks position. LED indicators built into each button will begin flashing when the outriggers are enabled. This rocker switch controls the flow of the oil to either the Beam Extension Cylinders or the Jack Extension Cylinders. Pushing the switch to the right of the center position controls Beams In and Out. Pushing the switch to the left controls Jacks Up and Down. When the switch is left in the center both the Beam and Jack operations are disabled and the LED indicators stop flashing. Outrigger alarms will sound when Beams Out, Jacks Down, or Beams In buttons are pressed.

BOOM ENABLE CONTROLS

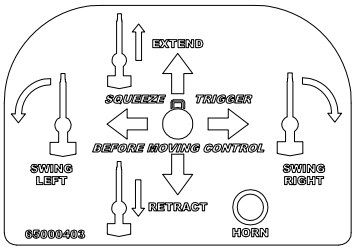

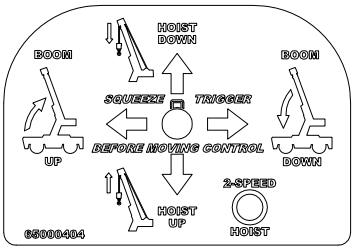

1. **Swing or Slewing:** Pushing away from the seat on the left-hand joystick lever will rotate the boom to the operator's left; pulling towards the seat will rotate it to the operator's right.
2. **Telescope:** Pulling back on the left-hand joystick lever will retract the boom; pushing forward will extend the boom. **Retract at a low to medium engine speed only. Overspeed will heat hydraulic fluid and may cause the booms to not sequence properly.**
3. **Horn:** Momentary button located at base of left-hand joystick operates vehicle horn.
4. **Boom or Derricking:** Pulling the right-hand joystick towards the seat will raise the boom; pushing away from the seat will lower it.
5. **Hoist:** Pulling back on the right-hand joystick lever will raise the load line; pushing forward will lower the load line. Included in this joystick is a drum rotation indicator that will vibrate as the Hoist drum rotates. Holding a finger over the top of the lever will give the Operator the strongest feel for the vibration.
6. **2-Speed Hoist:** Momentary button located at base of right-hand joystick changes speed of hoist between high and low. Green light on right-hand side of monitor indicates when hoist is in high speed.

Both joysticks may be used for simultaneous operation to achieve combinations of movements. Some controls must be used together. For instance, the boom telescope and the hoist controls must be used together to maintain clearance between boom and load line hook. Full speed operation of all boom functions is allowed when the crane is set up on outriggers, leveled to +/-1°, and the RCL is running in the normal mode. The crane will be running at a reduced speed, called Mid-range, if the jacks have been lifted, or not fully leveled, or when the RCL is being by-passed. The hoist function is not affected by the Mid-range condition.

NOTICE

Avoid holding a joystick lever or outrigger button in the activated position after the function has reached the end of its travel. This will impose unnecessary stresses on the hydraulic components and heat the hydraulic system.

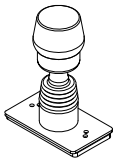

Front Winch: The optional Front Winch will have a single-axis joystick mounted on the right-hand side below the transmission shift lever. This joystick locks in the center position to prevent inadvertent movement. The collar under the knob must be pulled up before moving the joystick in either direction. Pulling back will pull winch line in; pushing forward will pay winch line out. The joystick will automatically re-lock when released. The front winch system has a shut-off switch built into the roller fairlead. It will cut out the winch-in direction when the hook has contacted the roller assembly, preventing damage to the rope.

SEQUENCE OF OPERATION

DRIVING THE VEHICLE

The following procedure is recommended for driving the vehicle:

1. Perform the daily inspection and test. (See Page 3-4)
2. Apply park brake.
3. Place transmission control lever in neutral.
4. Start engine and allow a warming period.
5. While warming the engine, set up the Rated Capacity Limiter (RCL) configuration.
6. Stow boom over front.
7. Pull hoist line snug.
8. Retract outriggers in both directions.
9. Step on the brake pedal.
10. Release park brake switch.
11. Shift transmission to desired gear by placing forward/reverse lever in desired position.
12. Release brake pedal and press on accelerator pedal.
13. Slow down when making turns.
14. When parking the vehicle, set park brake and lower outriggers or chock wheels.

W A R N I N G

Engine exhaust contains carbon monoxide, a poisonous gas that is invisible and odorless. Breathing engine exhaust fumes can cause death or serious illness. Do not run the engine in enclosed areas without adequate ventilation.

OPERATING THE CRANE

The following procedure is recommended for placing the crane in operation:

1. Perform daily inspection and test. (See Page 3-4)
2. Drive crane to lifting location. Take the time to survey the location for obstacles, solid footing, and check if crane is spotted within the lifting radius for the load being lifted.
3. Apply park brake.
4. Place transmission control lever in neutral.
5. Start engine and allow a warming period at low RPM (if not already running).
6. Use the Boom Enable switch to select either Beams or Jack as needed. Set all outriggers fully down on firm, level surface. Use appropriate plate cribbing under outrigger shoes as needed on soft or uneven surfaces (greater than 1°). Use the Leveling system to find a true level position before operating. Outriggers should remain set during all crane operations except for pick and carry.
7. Set up the Rated Capacity Limiter (RCL) configuration for the boom and outrigger conditions.
8. Return Boom Enable switch to center position before operating the crane. Meter the controls when beginning or ending any movement. This prevents suddenly starting or stopping, which causes unsafe load swinging and shock loads on the equipment. The control should be slightly actuated to begin movement and then slowly increased to desired speed. Metering can be improved by coordinating with the accelerator pedal.
9. You may use the throttle control switch to set the engine speed to 1200 or 1800 RPM when the park brake is on. Return to idle by releasing park brake momentarily.
10. Release accelerator when crane is not in use and shut off engine, if practical.

NOTICE

Any change in outrigger position when in the working mode will cause the RCL to revert back to set-up mode. The system senses a configuration has changed even if temporarily.

NORMAL GAUGE READINGS

The IC-400 is equipped with a monochrome dash display on the left-hand side. This display is programmed to monitor engine information directly off the SAE J1939 CAN bus network provided by the engine manufacturer. The display also connected to other inputs, such as the fuel tank sender and hydraulic tank temperature sensor, to provide a wide variety of valuable information to the operator. Much of the run-time information is combined together in the Main Screen where the Operator will find many common vehicle parameters. Other screens with specific information can be scrolled to as needed, including: Level Indicator, Hydraulic Fluid Temp, Fuel Consumption, and Fault Codes screens. Four buttons are provided at the bottom of the display to navigate to these various screens as needed. Also, three LED indicators are built into both the left and right side of the display area to give additional information.

Main Screen vehicle parameters:

- Fuel
- Hourmeter
- Time
- Engine RPM
- Coolant Temp
- Oil Press
- System Voltage

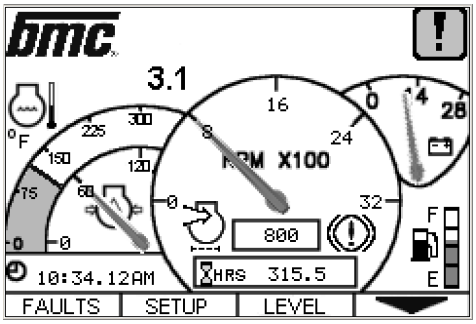

This display is considered the 'home' screen and displays real-time data for each parameter. It also has some warning icons that will turn On when a critical threshold has been exceeded. These icons include the following:

- High Coolant Temperature Warning 
  Engine Coolant Temperature -- Allow engine to warm up to 150°F (65°C) before operating crane. Stop engine if temperature exceeds 215°F (102°C).

- Low Oil Pressure Warning 
  Engine Oil Pressure -- Stop engine if oil pressure does not exceed 15 PSI (1 bar) at low idle. Pressure varies with engine RPM.

- Low System Voltage warning 
  Voltmeter -- The voltmeter should read about 13 to 14 volts when the engine is running.

W A R N I N G

Vapors can be formed inside fuel tank and cause buildup of pressure that can result in sudden expulsion of gasoline and gasoline vapors from the filler neck when the fuel cap is removed from a hot tank. Remove cap slowly. Fuel spray may cause injury.

- Low Fuel warning 
  Fuel -- Do not allow fuel tank to become empty. The engine will be difficult to restart and may require "bleeding" of injectors. Keep fuel tank full when out of service to prevent condensation in tank.

- High Hydraulic Fluid Temperature warning 
  Hydraulic Oil Temperature – Warning icon will flash at 180°F (82°C). Machine will automatically shut down at 190°F (88°C).

- Control System Fault warning 
  Control Faults – The system has detected a hardware failure in the controls.

- Low Brake System Pressure warning 
  Brake Pressure – The brake accumulators may not have adequate pressure. Do not drive the machine until the problem is found and fixed.

- Restricted Air Intake warning 
  Air Filter – A replacement air filter is necessary.

Faults screen: The first button from the left is labeled "Faults" when viewing the Main Screen. Pushing this button will switch the display to a Faults screen that allows the Operator to make two choices: either view 'J1939 Faults' from the engine or view 'System Faults' from the control system.

Any time there is a control system fault detected, there is a separate red LED lamp on the left-hand dash that will be lit until the fault is resolved. The System Faults screen will help identify the issue that needs to be resolved.

If there is an engine warning or engine stop signal, either the amber (warning) or red (stop) LED built into the left hand side of the display will be lit until resolved. The 'J1939 Faults' screen will guide the Operator to any active engine code(s). There may be several to scroll through. There is also a provision to look into any 'inactive' codes, if any exist, by using the first button from the left labeled "Inactive". Finally, there is an 'escape' or 'back' button that uses the following symbol and allows the Operator to return to the Main Screen.

Setup screen: The second button from the left is labeled "Setup" and will switch the display to a Setup screen. This display will allow the Operator to set the following items as needed: clock, display contrast, and units of measure. There are four additional items protected by pass codes: hydraulic temperature warnings, fuel sender, level sensor, and option codes. These protected screens are intended for factory set-up and potential maintenance access. There should be no need for the Operator to change these factory settings.

W A R N I N G

The crane will not operate if it is not level. Two flashing green LED on the left dash panel will alternate flashes to indicate the crane is not level enough to operate or the level sensor has not been calibrated.

Level Guide screen: The third button from the left is labeled "Level" and will switch the display to an electronic bubble level. This same screen will automatically appear when either outrigger Beams or Jacks are in use. This screen will assist in leveling the crane during setup. There are two rings and a black dot that represents the air bubble in a normal level. Keeping the bubble inside the smaller ring allows the crane to run at full speeds on all boom functions. If the bubble moves outside the smaller ring (>1.3 degrees) but remains inside the larger ring (< 3.0 degrees) then boom function speeds are reduced but still allowed. If it moves further until on or outside the larger ring, the system will prevent boom function movement. The number of degrees the crane is off of true level appears on the lower right side of the display and will also show on the Main Screen.

There are also two green LED lights mounted directly above the outrigger 8-button pad to also help level front-to-back and side-to-side. These external LED's are always active regardless of what screen is displayed. Solid lamps indicate the crane is level. A blinking lamp tells the Operator which direction is not truly level but still operational at a reduced speed called Mid-range. An amber light on the right hand side of display will be lit as a reminder. Alternating LED's indicate the crane is not level enough to operate and the control system will prevent any boom movement.

Digital Gauge screen: The right button on the display has a 'Down Arrow' icon label and will switch the display to a Digital Gage layout. Actual values from the J1939 engine connection will be shown here. Warning icons will also show on this screen.

Fuel Consumption screen: Using the right button a second time from the Main screen will display Fuel Consumption data from the J1939 engine connection. This information can be helpful to monitor engine usage. A 'Reset' button is provided to reset the Fuel Trip count for tracking purposes. Also, an 'Up Arrow' and 'Down Arrow' are provided to scroll up or down from this screen.

NOTICE

This crane will not operate if the hydraulic temperature limit has been exceeded. A flashing  Icon will appear on the Main Screen to indicate the crane is approaching the limit. If the temperature continues to rise, the icon will be solid and the control system has stopped boom functions. A cool down is needed to continue.

Hydraulic Fluid Temperature screen: Using the right button a third time from the Main screen will display a Hydraulic Temperature gage. The numerical value in F° (or C°) is also shown on the bottom. This screen is helpful if there is concern the fluid temperature may be reaching the shut off limit or needs to cool down before work resumes. Only the 'Up Arrow' is provided at this level to navigate back through the other screens to reach the Main screen.

RATED CAPACITY LIMITER (RCL)

A rated capacity limiter (RCL) is installed on the crane to assist the operator in estimating loads and measuring load radii. Please read the RCL Operation Manual for complete instructions on operation of the system. Following are some additional operating tips.

Always be aware that the RCL can stop boom movement at capacity load conditions and in two-blocking conditions. Use good judgment in controlling the speed of boom movements to prevent shock loads and swinging loads.

If the RCL system stops the crane movement there are various remedies that may be used to restart operation. If the hook is two-blocked, it should be lowered using HOIST DOWN, if safe to do so. BOOM RAISE OR TELESCOPE RETRACT may be used if this is safer.

If the load is the maximum for the loadline or attachment, the load should be set down in a safe place using the HOIST DOWN control and the load or attachment changed. TELESCOPE RETRACT, SWING LEFT, or SWING RIGHT may also be used, if safe. DO NOT USE THE BOOM RAISE CONTROL as this may increase the overload.

If the load is at the maximum allowable load radius, the boom can be raised or retracted to a safe radius, or the load may be lowered to a safe place using HOIST LOWER. If the boom extension is at its lower angle limit, the boom must be raised or the load hoisted down.

If the boom is fully lowered until it stops, (about 0°) the RCL will display an error message because the boom lift pressure sensors cannot read a useful pressure in this condition. To remedy this, raise the boom slightly. Or, if the boom is fully raised, (about 75°) the RCL may show an overload condition. The trapped pressure in the boom lift cylinders is interpreted as an overload. To correct this condition, the override keyswitch under the dashboard must be turned and the boom lowered just slightly. Then check for other conditions before lowering further.

If there is a malfunction of the RCL or Anti-Two-Block system that causes loss of boom movement and cannot be remedied by the procedures above, the override keyswitch under the dashboard may be required to move the boom. Any boom movements with the override keyswitch engaged will be a reduced speed called Mid-range. An amber light on the display will indicate that the controls are in the Mid-range mode.

W A R N I N G

We recommend the emergency override switch be used with discretion. Improper or careless use of this switch can cause damage to the crane and endanger people and property. The operator who uses this override in an emergency should use good judgment.

There is a LED light on the right hand dashboard to warn that one or more outrigger jacks is not fully in contact with the ground when using the “On Out and Down” or “In and Down” setup on the RCL. Check the light daily when the outriggers are down and there is no load on the hook. Retract and extend each outrigger about three inches. The light should be lit when any jack is not completely down.

CRANE CAPACITY

Before lifting loads, the operator must read the **Crane Capacity Chart** and adhere to the load capacities and radii of handling stated in the chart. The information provided on this chart is based on stability, structural strength and hydraulic capacity.

To operate the crane safely, the operator must know the weight of the load and handling devices and the radius of the lifting operation. The crane must not be loaded beyond the specifications of the capacity chart except for test purposes as provided in ASME B30.5 Section 5-2.2. The person responsible for the lift must be sure that the load does not exceed the crane ratings at any radius or position at which the load may travel during the entire lifting operation. The weights of the hooks, blocks, downhaul weights, slings, and other handling devices must be added with the load.

Be aware that one outrigger may lift off the ground while operating on outriggers at less than Rated Capacity. This is considered normal if the load is mainly over the opposite corner at the time. The loading on the outrigger closest to the hook load will increase substantially. Loading on the outrigger in the opposite corner will decrease. Flexing in the chassis can cause the opposite corner to lift slightly.

The **Rated Capacity Limiter** on the crane is intended to assist the operator in estimating loads, measuring load radii and to alert the operator to impending overload conditions. The use of the Rated Capacity Limiter does not replace the requirements of the preceding section. Verified weights and measured radii must take precedence over the Rated Capacity Limiter readings. Please read the RCL Operation Manual.

The Rated Capacity Limiter displays a load, load radius and boom angle that are obtained from electronic calculations using readings from pressure, length and angle sensors. These readings cannot be exact and should be treated as estimates. In general, the smaller the load and the higher the boom angle, the larger the percent of error.

Be aware that the electronic and mechanical components cannot be 100% fail-safe. Do not consider the system as a substitute for good judgment, training, experience or accepted safe operating practices. The operator is solely responsible for operation of the crane.

Setting the Rated Capacity Limiter for the proper configuration of the crane is necessary before starting a lift. If incorrectly set, the system will not alert the operator to an impending overload, possibly resulting in the loss of life or destruction of property. If the Rated Capacity Limiter is inoperative or malfunctioning, repair or recalibration of the unit must be done as soon as reasonably possible. The person responsible for lifts must establish procedures for determining load weights and radii and conduct the lifts according to the second paragraph above.

The Rated Capacity Limiter is designed to stop some crane functions at the limitations of the capacity chart. These are: BOOM LOWER, TELESCOPE EXTEND, HOIST RAISE, SWING LEFT and SWING RIGHT. Great care must be exercised when handling a load near capacity or near a two-blocking condition. If the boom is being lowered or swung, the load will tend to swing if the Rated Capacity Limiter stops the boom movement. If the load is moving too fast, the sudden stopping by the system can cause dangerous load swinging which can cause death or injury to personnel or property damage by impact with the load or by the crane tipping.

W A R N I N G

The Rated Capacity Limiter can suddenly stop the BOOM LOWER, TELESCOPE EXTEND, HOIST RAISE, SWING LEFT, and SWING RIGHT functions, causing the load to bounce or swing. Use great care when handing a load near capacity limits or near a two-blocking condition.

NOTICE

The outriggers should always be set before configuring the Rated Capacity Limiter. The system will check for outrigger position before the configuration can be confirmed. If the configuration does not match the outrigger position, the Operator will be asked to start over.

The IC-400 is equipped with individual Jack switches that detect when the Jack pad is in contact with the ground. It is also equipped with four switches that detect when all the Beams are completely extended as a single input. These five switch inputs are fed to the RCL, which allows it to detect whether the correct configuration was given during the RCL set-up. It is important to have the outriggers properly set before configuring the RCL for outrigger operation. It is programmed to give an 'Jack' fault, sound an alarm, a dash display LED will light, and revert back to set-up if it does not sense all four outrigger have contact with the ground. Be sure each switch is functioning correctly by observing the LED lights on the 8-button Outrigger pad. Four middle LED's should be solidly lit when all four Jack pads contact the ground. The four outer LED's will be lit when all Beams are completely extended. See both patterns shown below. If the outriggers are down and/or out but all the LED's do not show the proper pattern, a switch or wiring has malfunctioned and the RCL will not allow operation in the appropriate Outrigger portion of the Capacity Chart.

IN & DOWN LED pattern

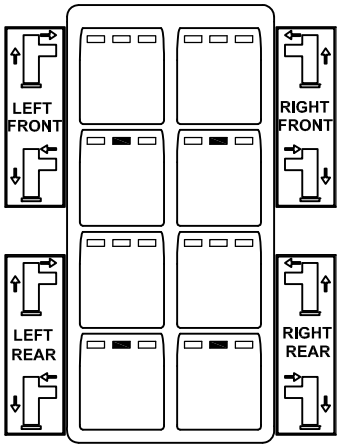

OUT & DOWN LED pattern

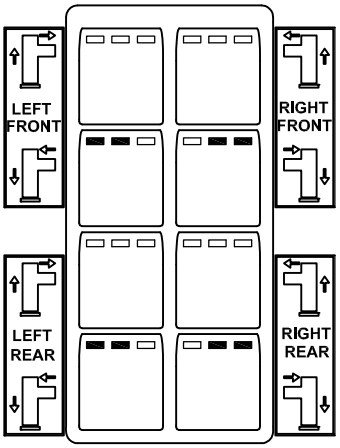

Once the RCL is in run mode, the IC-400 continues to detect when outrigger positions change. An allowance is made for one Jack to lift due to chassis flex. When two are detected to be lifted, a ‘Jack’ fault will be displayed, the audio alarm will sound, a dash display LED will light, and the RCL will return to Set-Up mode. If a Beam position changes while in the run mode a ‘Beam’ & ‘Operating Mode’ fault will be displayed, the audio alarm will sound, and the RCL will return to Set-Up mode. The system presumes the Operator wants to change configuration of the crane whenever an outrigger position changes.

CRANE CAPACITY CHART DEFINITIONS AND RULES:
The load radius is the horizontal distance from the centerline of boom rotation (the center of the turntable when it is level), to the vertical load line with the load suspended. Because of deflections of the boom and carrier, the load radius increases when a load is hoisted from its resting place. The load radius may be measured with a measuring tape. If the desired load radius falls between two load radii on the chart, use the load radius with the lower capacity. If the boom length falls between two boom length columns on the chart, use the longer boom length column. Interpolating between the numbers is not recommended.

Load capacity ratings on this equipment are given on the basis that operations are to be conducted on firm and level terrain and in a safe environment. A level sensor and a screen on the Dash Display have been provided to aid the operator in leveling the crane. These capacity ratings are to be reduced in proportion to any deviation from the prescribed conditions. Any unfavorable environmental condition, such as soft, sloping or uneven terrain, high wind, or hazardous surroundings constitutes a deviation.

The main boom capacities are given in relation to the radius and boom length at which the load is being handled. Boom extension capacities depend on the boom angle, the boom extension angle, boom length, and load radius. The capacities shown on the capacity chart are the maximum allowable at the indicated radius and boom length. The greatest load that may be handled by the BMC IC-400 is 50,000 pounds (22700 kg), but only at a 8 foot (2.4 m) radius, on outriggers, with a retracted boom. All load ratings, operating radii, work areas, boom lengths, boom extension offsets, and outrigger conditions are shown on the capacity chart. A metal chart is attached near the operator's seat. A laminated version of the same chart is included in the literature compartment. These charts are for the express purpose of informing the operator when a load can or cannot be safely handled.

The capacities shown in the "OUT & DOWN 360° ROTATION", “IN & DOWN 360° ROTATION”, and “ON RUBBER 360°” columns of the capacity chart apply to the entire 360 degree rotation of the boom. The capacities are maximum allowable at the indicated radius and boom length. The capacities "IN & DOWN OVER FRONT" and “ON RUBBER FRONT” are limited to the work area sectors shown on the chart.

Note that the "IN & DOWN 360° ROTATION" capacities are much less than the "IN & DOWN OVER FRONT" capacities. Also note the “ON RUBBER 360°” capacities are much less than the “ON RUBBER FRONT” capacities. The least stable position of the boom is over the sides of the crane. Use great care when swinging a load from the front or rear of the crane toward the sides of the crane. The load must be known in order to assure that the crane will not tip.

CRANE CAPACITY CHART
IC-400-3A

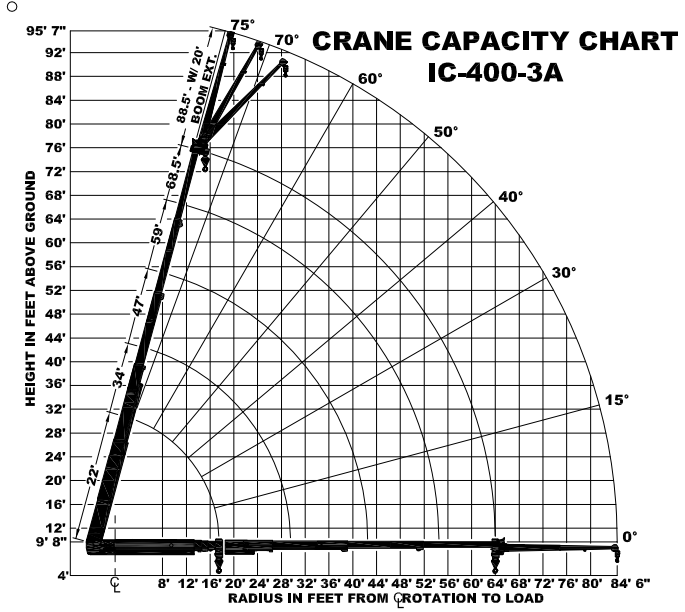

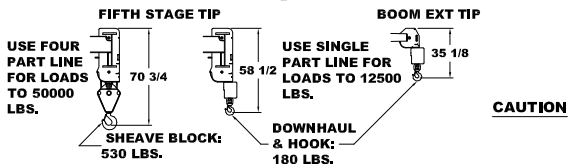

CAPACITIES IN POUNDS FOR OPERATION ON FIRM LEVEL SURFACE

LOAD RADIUS FEET	ON OUTRIGGERS									ON RUBBER		LOAD RADIUS FEET
	OUT & DOWN 360° ROTATION OR IN & DOWN OVER FRONT					IN & DOWN 360° ROTATION				FRONT	360°	
	BOOM RETRACTED 22' BOOM	2ND STAGE OUT- 34' BOOM	47' BOOM	59' BOOM	FULLY EXTENDED 68.5' BOOM	BOOM RETRACTED 22' BOOM	2ND STAGE OUT- 34' BOOM	47' BOOM	59' BOOM	FULLY EXTENDED 68.5' BOOM	ANY BOOM	ANY BOOM	
8	50000	36000	36000			42000	36000	36000			24400	17000	8
10	42000	36000	35200	34400		27900	26700	26600	28300		20300	13200	10
12	36000	36000	31900	28100		20300	19300	19300	20600		17200	10500	12
14	35100	34100	28600	26200	21900	15700	14800	14700	15900	16000	14700	8500	14
16	30100	29100	25200	22900	19600	12500	11600	11600	12700	12900	12700	6900	16
18	23600	23600	22300	20800	17800	10100	9300	9300	10400	10600	11100	5600	18
20	4700	21100	20500	19300	16000		7500	7500	8400	8800	9400	4600	20
22	4400	19000	18600	17900	14600		6000	6000	6900	7400	7900	3700	22
24	4000	17100	17100	16300	13500		4900	4900	5800	6300	6600	3000	24
26	3700	15300	15400	14400	12300		3900	3900	4900	5300	5600	2300	26
28	3400	13300	13300	13300	11300		3100	3100	4100	4600	4800	1800	28
30	3200	11700	11700	12200	10400		2500	2500	3400	3900	4100	1300	30
32	3000	4000	10500	11200	9600			2000	2800	3300	3600	1100	32
36	2800	3600	8500	9100	8200			1400	1900	2300	2800	700	36
40		3200	7200	7400	7100			900	1200	1600	2200	---	40
42		3000	6700	6800	6700			700	900	1300	2000	---	42
44		2900	3700	6200	6200				700	1100	1800	---	44
48		2700	3400	5400	5300				---	700	1400	---	48
52			3100	4700	4600				---	---	1100	---	52
54			3000	4400	4200				---	---	1000	---	54
56			2900	4400	3900					---	900	---	56
60			2800	4100	3500					---	---	---	60
64				3600	3000					---	---	---	64
68				3200	3000								
72				2800	2800								
76					2400								
80					2100								
84					1900								

BOOM EXT. OFFSET ANGLE	20' BOOM EXTENSION STRUCTURAL CAPACITIES							
	MAIN BOOM ANGLE							
	0°	15°	30°	40°	50°	60°	70°	75°
0°	2600	2750	3000	3400	4100	5100	6200	7000
15°	---	2500	2600	2700	2900	3300	4300	4800
30°	---	---	2300	2400	2500	2700	3200	3400

CAPACITIES ON OUTRIGGERS OUT & DOWN ARE 85% OF TIPPING LOADS. CAPACITIES ON IN & DOWN OUTRIGGERS ARE LESS THAN 85% OF TIPPING LOADS. CAPACITIES ON RUBBER ARE 75% OF TIPPING LOADS. CAPACITIES BELOW BOLD LINE ARE LIMITED BY TIPPING OR BOOM EXTENSION STRUCTURAL CAPABILITY. OTHER CAPACITIES ARE LIMITED BY STRUCTURAL OR HYDRAULIC CAPABILITY.

DO NOT LIFT LOADS ON BOOM EXTENSION WHEN ON RUBBER OR OVER SIDE ON IN & DOWN OUTRIGGERS.

CAUTION BOOM EXTENSION LOADS MUST NOT EXCEED MAIN BOOM CAPACITY. LOAD RADII BELOW DOUBLE LINES REQUIRE BOOM EXTENSION.
DO NOT POSITION BOOM AT LOAD RADII WHERE " ---" CAPACITIES ARE SHOWN.
EXCEEDING CAPACITY RATINGS OR APPLYING SIDE LOADS TO THE BOOM OR BOOM EXTENSION IS MISUSE, IS HAZARDOUS, AND VOIDS WARRANTY.

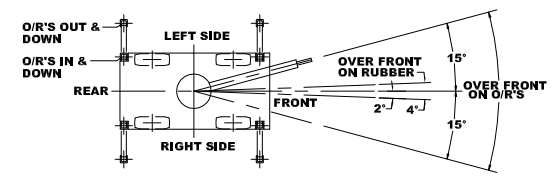

IN & DOWN 360° CAPACITIES APPLY WHEN OPERATING OVER THE SIDES OR REAR WITH BEAMS AT LESS THAN FULL EXTENSION.

FOR BOOM LENGTHS BETWEEN COLUMNS, USE THE NEXT LONGER BOOM LENGTH COLUMN. FOR LOAD RADII BETWEEN ROWS, USE THE NEXT LONGER LOAD RADIUS ROW.

LOAD RADIUS IS THE HORIZONTAL DISTANCE FROM THE CENTER OF ROTATION OF THE UNLOADED CRANE TO THE VERTICAL LOAD LINE WITH LOAD APPLIED.

LOAD HOOKS, DOWNHAUL WEIGHTS, HOOK BLOCKS, AND OTHER LOAD HANDLING DEVICES EXCEPT HOIST ROPE SHALL BE CONSIDERED PART OF THE LOAD.

BOOM EXTENSION DEDUCT: 500 LBS. WHEN STOWED ON BASE BOOM.

ENSURE ANTI-TWO-BLOCK SWITCH IS FUNCTIONAL AFTER DEPLOYING OR STOWING BOOM EXTENSION.

BOOMS ON THIS UNIT ARE ALL STEEL AND HAVE NO LINE VOLTAGE RATING- NO ELECTRICAL INSULATION VALUE.

DECK CAPACITY 20,000 LBS. WITH EMPTY BOOM RETRACTED OVER FRONT. DECK LOADS MUST BE CENTERED BEHIND FRONT AXLE. SPEED MUST BE LESS THAN 2 MPH. MAXIMUM TRAVEL 200 FT. IN 30 MINUTES ON SMOOTH PAVEMENT.

PICK AND CARRY WITH THE SHORTEST PRACTICAL BOOM, CENTERED OVER THE FRONT. OPERATE WITH THE BOOM AS LOW AS POSSIBLE, WITH THE LOAD CLOSE TO GROUND. PICK AND CARRY CAPACITIES ARE FOR SMOOTH, LEVEL PAVED SURFACE.

OPERATION:
1. READ AND UNDERSTAND OPERATION MANUAL BEFORE OPERATING CRANE.
2. CHECK LEVEL OF HYDRAULIC OIL AND ENGINE OIL DAILY.
3. CHECK UNIT FOR VISIBLE DEFECTS AND LOOSE PARTS.
4. SET VEHICLE PARK BRAKE SECURELY.
5. EXTEND OUTRIGGERS TO SOLID FOOTING AND LEVEL CRANE.
6. OPERATE ALL HYDRAULIC CONTROLS SLOWLY AND SMOOTHLY. AVOID SUDDEN STARTS AND STOPS.

THE LOAD HOIST LINE ON THIS UNIT MUST BE 5/8" DIA. 6X36 EEIP-RRL-IWRC WIRE ROPE (OR EQUIVALENT) WITH A BREAKING STRENGTH OF AT LEAST 43750 LBS.

APPROVED TIRES: 17.5-25 20PR - 100 PSI
TORQUE WHEEL NUTS TO 475 FT-LBS.
THESE CONDITIONS MUST BE MAINTAINED TO HANDLE RATED LOADS ON THIS CRANE.

MAXIMUM HYDRAULIC PRESSURE 3000 PSI.

MODEL NO.	SERIAL NO.	DATE OF MFR.
IC-400-3A		

BRODERSON MANUFACTURING CORP.
LENEXA, KANSAS

65400791

CRANE CAPACITY CHART
IC-400-3A METRIC

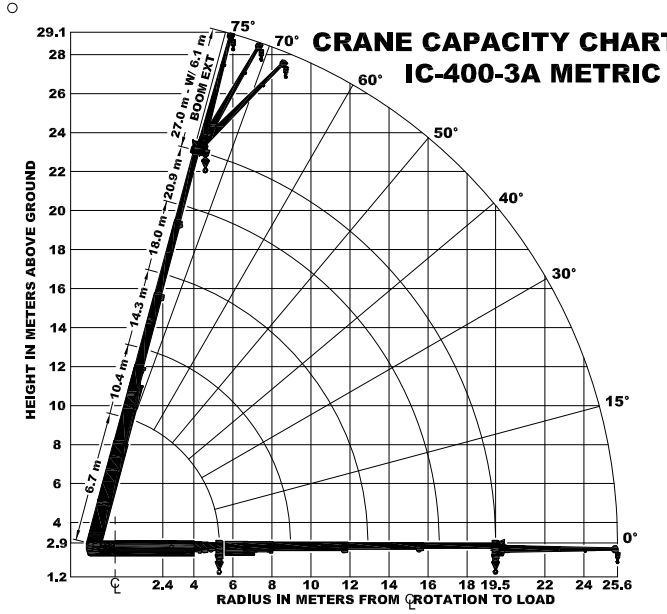

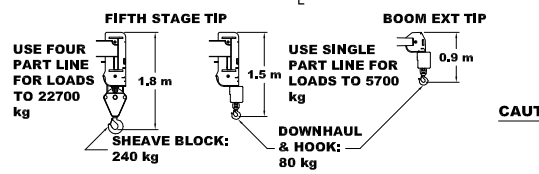

CAPACITIES IN KILOGRAMS FOR OPERATION ON FIRM LEVEL SURFACE

LOAD RADIUS METERS	ON OUTRIGGERS										ON RUBBER		LOAD RADIUS METERS
	OUT & DOWN 360° ROTATION OR IN & DOWN OVER FRONT					IN & DOWN 360° ROTATION					FRONT	360°	
	BOOM RETRACTED 6.7 m BOOM	2ND STAGE OUT- 10.4 m BOOM	14.3 m BOOM	18.0 m BOOM	FULLY EXTENDED 20.9 m BOOM	BOOM RETRACTED 6.7 m BOOM	2ND STAGE OUT- 10.4 m BOOM	14.3 m BOOM	18.0 m BOOM	FULLY EXTENDED 20.9 m BOOM	ANY BOOM	ANY BOOM	
2.4	22700	16300	16300			19000	16300	16300			11000	7700	2.4
3.0	19300	16300	16000	15600		12900	12400	12300	12800		9300	6100	3.0
3.5	16900	16300	14800	13200		10000	9600	9500	9900		8100	5000	3.5
4.0	16100	15900	13600	12200	9900	7900	7500	7400	8100	7200	7100	4200	4.0
4.5	15100	14600	12400	11300	9500	6500	6100	6000	6600	6700	6300	3500	4.5
5.0	13100	12700	11100	10100	8700	5400	5000	5000	5500	5600	5600	3000	5.0
5.5	10500	10600	10100	9400	8000	4600	4200	4200	4700	4800	5000	2500	5.5
6.0	2100	9700	9400	8800	7400		3500	3500	3900	4100	4400	2100	6.0
7.0	1900	8200	8100	7700	6300		2400	2400	2800	3100	3300	1500	7.0
8.0	1600	6800	6800	6400	5500		1700	1700	2100	2400	2500	1000	8.0
9.0	1500	5400	5400	5600	4800		1200	1200	1600	1800	1900	600	9.0
10.0	1300	1700	4500	4900	4200			800	1100	1400	1500	400	10.0
11.0	1200	1600	3800	4100	3700			600	800	1000	1200	---	11.0
12.0		1500	3300	3400	3300			400	600	700	1000	---	12.0
13.0		1300	2900	3000	2900			---	300	500	800	---	13.0
14.0		1200	1600	2600	2600				---	400	700	---	14.0
15.0		1200	1500	2300	2300				---	---	600	---	15.0
16.0			1400	2100	2000				---	---	500	---	16.0
16.5			1300	2000	1900				---	---	400	---	16.5
17.0			1300	2000	1800					---	400	---	17.0
18.0			1200	1900	1600					---	---	---	18.0
19.0			1200	1700	1400					---	---	---	19.0
19.5				1600	1300					---	---	---	19.5
21.0				1400	1300								
22.0				1200	1200								
23.0					1100								
24.0					1000								
25.6					800								

BOOM EXT. OFFSET ANGLE	6.1 m BOOM EXTENSION STRUCTURAL CAPACITIES							
	MAIN BOOM ANGLE							
	0°	15°	30°	40°	50°	60°	70°	75°
0°	1200	1200	1300	1500	1800	2300	2800	3100
15°	---	1100	1200	1200	1300	1500	1900	2200
30°	---	---	1000	1100	1100	1200	1400	1500

CAPACITIES ON OUTRIGGERS OUT & DOWN ARE 85% OF TIPPING LOADS. CAPACITIES ON IN & DOWN OUTRIGGERS ARE LESS THAN 85% OF TIPPING LOADS. CAPACITIES ON RUBBER ARE 75% OF TIPPING LOADS. CAPACITIES BELOW BOLD LINE ARE LIMITED BY TIPPING OR BOOM EXTENSION STRUCTURAL CAPABILITY. OTHER CAPACITIES ARE LIMITED BY STRUCTURAL OR HYDRAULIC CAPABILITY.

DO NOT LIFT LOADS ON BOOM EXTENSION WHEN ON RUBBER OR OVER SIDE ON IN & DOWN OUTRIGGERS.

CAUTION BOOM EXTENSION LOADS MUST NOT EXCEED MAIN BOOM CAPACITY. LOAD RADII BELOW DOUBLE LINES REQUIRE BOOM EXTENSION.
DO NOT POSITION BOOM AT LOAD RADII WHERE " ---" CAPACITIES ARE SHOWN.
EXCEEDING CAPACITY RATINGS OR APPLYING SIDE LOADS TO THE BOOM OR BOOM EXTENSION IS MISUSE, IS HAZARDOUS, AND VOIDS WARRANTY.

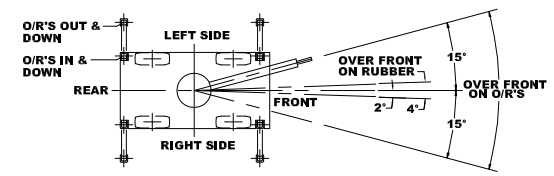

IN & DOWN 360° CAPACITIES APPLY WHEN OPERATING OVER THE SIDES OR REAR WITH BEAMS AT LESS THAN FULL EXTENSION.

FOR BOOM LENGTHS BETWEEN COLUMNS, USE THE NEXT LONGER BOOM LENGTH COLUMN. FOR LOAD RADII BETWEEN ROWS, USE THE NEXT LONGER LOAD RADIUS ROW.

LOAD RADIUS IS THE HORIZONTAL DISTANCE FROM THE CENTER OF ROTATION OF THE UNLOADED CRANE TO THE VERTICAL LOAD LINE WITH LOAD APPLIED.

LOAD HOOKS, DOWNHAUL WEIGHTS, HOOK BLOCKS, AND OTHER LOAD HANDLING DEVICES EXCEPT HOIST ROPE SHALL BE CONSIDERED PART OF THE LOAD.

BOOM EXTENSION DEDUCT: 300 kg WHEN STOWED ON BASE BOOM.

ENSURE ANTI-TWO-BLOCK SWITCH IS FUNCTIONAL AFTER DEPLOYING OR STOWING BOOM EXTENSION.

BOOMS ON THIS UNIT ARE ALL STEEL AND HAVE NO LINE VOLTAGE RATING- NO ELECTRICAL INSULATION VALUE.

DECK CAPACITY 9100 kg WITH EMPTY BOOM RETRACTED OVER FRONT. DECK LOADS MUST BE CENTERED BEHIND FRONT AXLE. SPEED MUST BE LESS THAN 3.2 kmh. MAXIMUM TRAVEL 60 m IN 30 MINUTES ON SMOOTH PAVEMENT.

PICK AND CARRY WITH THE SHORTEST PRACTICAL BOOM, CENTERED OVER THE FRONT. OPERATE WITH THE BOOM AS LOW AS POSSIBLE, WITH THE LOAD CLOSE TO GROUND. PICK AND CARRY CAPACITIES ARE FOR SMOOTH, LEVEL PAVED SURFACE.

OPERATION:
1. READ AND UNDERSTAND OPERATION MANUAL BEFORE OPERATING CRANE.
2. CHECK LEVEL OF HYDRAULIC OIL AND ENGINE OIL DAILY.
3. CHECK UNIT FOR VISIBLE DEFECTS AND LOOSE PARTS.
4. SET VEHICLE PARK BRAKE SECURELY.
5. EXTEND OUTRIGGERS TO SOLID FOOTING AND LEVEL CRANE.
6. OPERATE ALL HYDRAULIC CONTROLS SLOWLY AND SMOOTHLY. AVOID SUDDEN STARTS AND STOPS.

THE LOAD HOIST LINE ON THIS UNIT MUST BE 16 mm DIA. 6X36 EEIP-RRL-IWRC WIRE ROPE (OR EQUIVALENT) WITH A BREAKING STRENGTH OF AT LEAST 195 kN.

APPROVED TIRES: 17.5-25 20PR - 690 kPa
TORQUE WHEEL NUTS TO 645 Nm
THESE CONDITIONS MUST BE MAINTAINED TO HANDLE RATED LOADS ON THIS CRANE.

MAXIMUM HYDRAULIC PRESSURE 207 bar.

MODEL NO.	SERIAL NO.	DATE OF MFR.
IC-400-3A		

BRODERSON MANUFACTURING CORP.
LENEXA, KANSAS 65400948

CAUTION

A capacity load may be carried on the boom, or a capacity load may be carried on the deck, but not at the same time. The total of the percent of deck load and the percent of boom load must not exceed 100%. For example, if the boom load is 100% of its capacity at its current load radius, the deck load capacity is 0%. If the boom load is 60% of the load rating for its load radius, the deck load capacity is 40% of maximum.

CAUTION

The "OUTRIGGERS OUT & DOWN" capacities of this crane are based on all outriggers being FULLY SPREAD AND EXTENDED to a FIRM surface with no load on the tires.

CAUTION

The "OUTRIGGERS IN & DOWN" capacities of this crane are based on all outriggers being EXTENDED to a FIRM surface with no load on the tires. The crane may tip at less than capacity loads if operated in the following manner:

A. Outriggers only partially spread or tires carrying some load.
B. Crane operated on a hill or sloping surface. Crane will tip at less than rated capacity if crane is not level.
C. Outriggers extended to a surface that appears to be firm, but is unable to support the outrigger pad at full rated loads. Examples of this type surface are:
    1. Thin or cracked blacktop or concrete.
    2. Dirt that appears dry and firm on top but is moist or unpacked beneath the surface.
    3. Dirt with a frozen but thin crust.

CAPACITY EXAMPLE (Also See Boom Extension Capacity Example Page 2-31)

Refer to the IC-400 capacity chart on the preceding page. A load 6' X 6' X 6' (1.5 m x1.5 m x 1.5 m) and weighing 12,700 pounds (5750 kg) is to be lifted onto the deck of the crane for transport to a new location. The load is on a roof 64' (20 m) high. The center of the load is 24' (7 m) from the center of rotation of the crane.

The chart shows that 12,500 pounds (5700 kg) is the maximum load on one-part line, so the sheave block is required. The chart also shows the weight of the standard sheave block to be 530 pounds (240 kg). The rigger indicates that two slings are required, weighing a total of 50 pounds (23kg). The total load is 12,700 + 530 + 50 = 13,280 lbs (5750 + 240 + 23 =6013 kg).

The "360° ROTATION, ON RUBBER" column of the chart allows lifting up to 17,000 pounds (7700 kg) at a 8-foot (2.4 m) load radius. However, this radius is less than the distance from the center of rotation to the center of the load, so the load cannot be lifted in this configuration. This lift will require the "ON OUTRIGGERS" columns to be used. Outriggers should always be used whenever possible.

The boom will need to be fully extended to reach the desired height. With a fully extended boom at a 24' (7 m) load radius on "IN & DOWN 360°" outriggers, the maximum capacity is only 6,300 pounds (3100 kg). On "OUT & DOWN 360° ROTATION OR IN & DOWN OVER FRONT" with a fully extended boom at a 24' (7 m) load radius, the capacity is 13,500 pounds (6300 kg) which is more than the total load. The load can be lifted over the front on IN & DOWN outriggers or over the side on OUT & DOWN outriggers. If possible, position the crane to lift the load over the front with the outriggers OUT & DOWN. This is the best position for stability.

NOTICE

If "IN & DOWN OVER FRONT" or "ON RUBBER-FRONT" is used to pick any load the amount of swing is limited. Refer to acceptable range of the load chart for working over the front.

Checking the chart, we see that the load is within the deck load limit of 20,000 pounds (9100kg) and that travel speed with the load must be limited to creep speed. Creep speed is less than 2 MPH (3 km/h) and not to exceed 200 feet (60 m) in a 30 minute period. This is an approved relationship between load, tire pressure and speed.

NOTICE

As the boom is loaded, deflection of the boom, tires, etc. will increase the load radius. Be conservative in your capacity estimate.

SHEAVE BLOCK AND DOWNHAUL WEIGHT

The capacity chart shows the approved hoist rope arrangements. The downhaul weight and sheave blocks supplied by Broderson are specially designed to operate the BMC Anti-Two-Block system. Other blocks or downhauls may bypass this system and create a dangerous condition. All retaining pins that pass through the sheave plates must be locked in place with cotters to hold the hoist rope (also called the load line) on the sheaves. Notice the load limit for each hoist rope arrangement.

For single part reeving the load line must pass through the center of the downhaul, through the wedge socket, and the dead end clamped in the block as shown in the figure below.

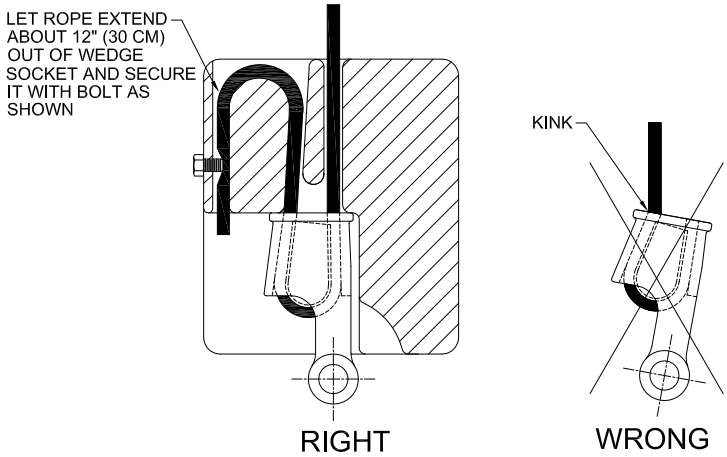

When resting the downhaul or sheave block on the ground for changing it, use the following procedure to prevent fouling the load line on the hoist. Raise the boom about 5 feet (1.5m) and lower the hoist until the hook nearly touches the ground. Then lay the hook on the ground by lowering the boom, not the hoist.

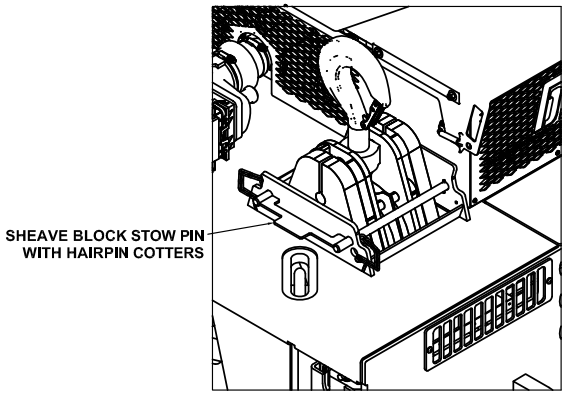

To stow the sheave block, pull the sheave block stow pin out as far as possible. Lift the block into the storage compartment by the hook. Push the sheave block stow pin back in place. Attach the cotter pins to the stow pin. See the figure above.

MULTI-PART LINE REEVING

For loads above 12,500 pounds (5700kg) the sheave block must be used. The four-part-line sheave block can be used for loads up to 50,000 pounds (22680kg). The wedge socket should be pinned to the wedge socket anchor at the boom tip as shown in the figure. The dead end of the rope in the wedge socket should be clamped as shown in the figure below. **The clamp must not be used on the live part of the rope.** This will seriously weaken the rope. The sheave block should hang straight, and the top of the block should meet the boom sheave plates squarely when pulled up snug.

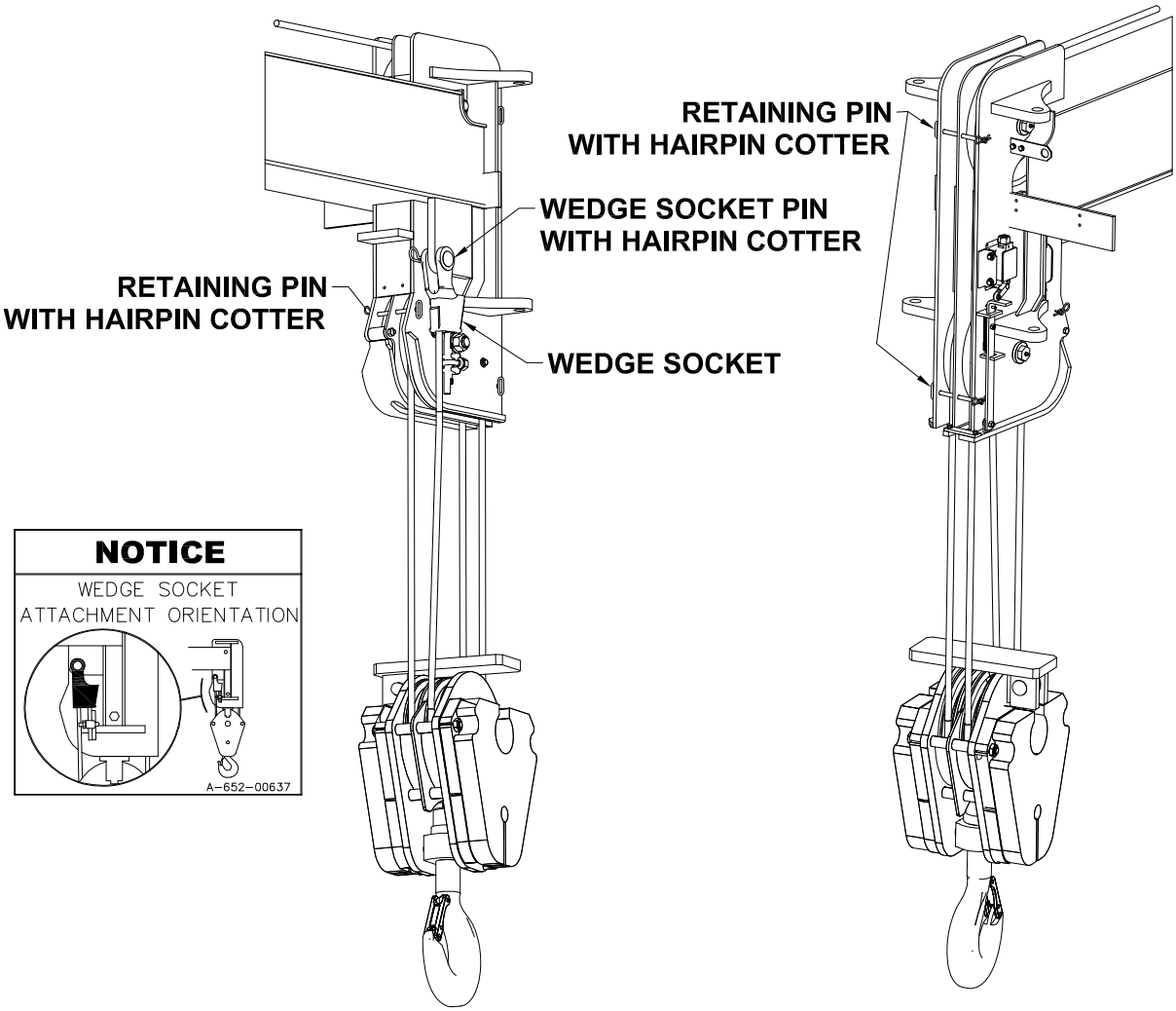

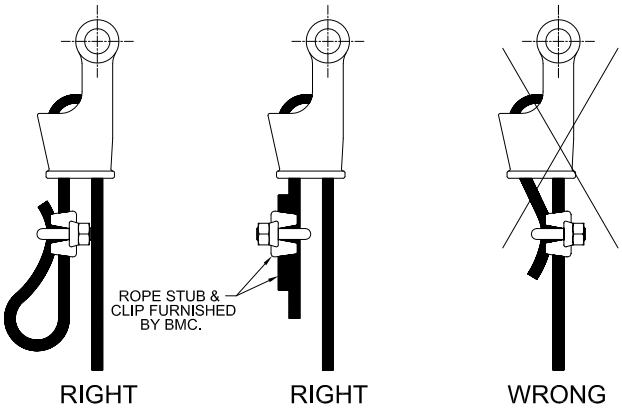

SAFETY DEVICES

There are certain safety devices on the IC-400 that are designed to maintain control of a load even if power or hydraulic line failure occurs. The operator should understand the function and operation of these devices so that a continual check on their performance can be made. There are other safety devices on the IC-400 designed to assist in the safe operation of the crane. These devices work with the control system, hydraulic system or engine to avert potential hazards. The operator should also understand how these devices work and how to routinely check if the device is functioning properly.

OUTRIGGER CYLINDER CHECK VALVES:
A double-acting check valve is mounted on each of the outrigger cylinders. This valve holds the outrigger in the extended position should power or hydraulic line failure occur. This valve has no adjustment. If an outrigger creeps up while supporting a load, there is an internal leak in the valve or in the outrigger cylinder piston seal. In either case, maintenance is required.

BOOM ELEVATION CYLINDER HOLDING VALVES:
A single-acting holding valve is mounted into each cylinder barrel. This valve holds the boom in the elevated position if power or hydraulic pressure line failure occur. This valve is adjustable to hold the desired load. If the boom creeps down with loads up through maximum capacity, one or both of these valves should be adjusted. If adjustment fails to correct the problem, there is an internal leak in a holding valve or a hydraulic cylinder. Refer to the maintenance instructions.

BOOM TELESCOPE CYLINDER HOLDING VALVES:
A single-acting holding valve is mounted to each telescoping cylinder. This valve holds the cylinder in the extended position if power or hydraulic pressure line failure occurs. This valve is adjustable to hold the desired load. If the boom creeps in under load, one of the valves should be adjusted. Test at two different boom lengths to determine which valve needs adjustment. If adjustment fails to correct the problem, there is an internal leak in the holding valve or the hydraulic cylinder. Refer to the maintenance instructions.

HOIST BRAKE AND HOLDING VALVE:
The hoist has an automatic brake in the gearbox and a holding valve mounted directly on the hoist motor to hold the load. A clutch in the gearbox allows the winch to turn freely in the RAISE direction. The brake is pilot released in the LOWER direction and should allow smooth stops of a load on the hoist.

ANTI-TWO-BLOCK SYSTEM:
This system prevents damage to the hoist rope and machine components from accidentally pulling the load hook against the boom tip. A pivot arm-actuated electric switch is connected through a cable reel mounted on the boom to the control system to stop the hydraulic circuit. This system will block the HOIST RAISE, TELESCOPE EXTEND and BOOM LOWER, SWING LEFT and SWING RIGHT circuits. No other circuits are affected. These circuits are returned to normal operation by operating the HOIST LOWER or TELESCOPE RETRACT control. An emergency override switch is provided so the boom can be operated in case of system failure. This key-operated switch is located under the left side of the instrument panel.

W A R N I N G

We recommend the emergency override switch be used with discretion. Improper or careless use of this switch can cause damage to the crane and endanger people and property. The operator who uses this key in an emergency should use good judgment.

EMERGENCY STOP SWITCH:
A two-position push button switch located on the top left-hand side of the dash panel is designed to stop the engine and shutdown the control system. Push switch in to disconnect power to the engine run circuit and control system circuit. Twist and pull to restore power.

OPERATOR-PRESENT TRIGGER SWITCH:
Each joystick provides a trigger switch that must be squeezed before moving the lever in any direction. These protect against inadvertent movement of the joystick while not intending to move the crane. The crane will not move if the trigger switch is activated after moving a joystick lever.

OPERATOR-PRESENT SEAT SWITCH:
An embedded switch inside seat bottom cushion designed to shutdown the hydraulic system when the operator has left the seat. The engine will stay running.

BATTERY DISCONNECT SWITCH:
A two-position rotary switch designed to disconnect the battery "positive" terminal from the electrical circuit. It is located near the right hand deck, mounted directly to the engine front hood. Locking tabs allow the use of 'lock-out/tag-out' if needed for maintenance or repair.

BRAKE PRESSURE WARNING ICON:
An indicator icon is included in the engine monitoring display on the left dash to alert the operator when the hydraulic pressure is low in the accumulators. This system should be checked daily. See Driving the Vehicle section on page 2-9. If the warning icon shows on the display during normal operations, stop work and repair the system immediately.

EMERGENCY EXIT:
In the event that the main access to the operator's station is blocked or otherwise hazardous, use the rear window as marked. Pull ripcord ring until completely removed! Push the window out until completely open and carefully climb out onto the rear deck. If unable to use the provided emergency exit, use the horn and flashers to summon help.

WARNING

Do not bypass safety devices! Each device has a specific purpose and should not be tampered with. Death, serious injury, or property damage could result from a safety device that is not functioning.

LOCKING FEATURES

The IC-400 has several locking features for various covers and compartments. The cab door can be locked to protect the operator's compartment. The master battery disconnect switch can be locked to prevent operation of the machine during maintenance work. The hood compartment can be locked to prevent unwanted access to the engine. The compartments located under the deck on the right side of the machine can be locked to protect the battery from theft and items in the storage box. Finally, the front deck compartment can be locked to protect any equipment in the accessory storage box.

OPTIONAL EQUIPMENT

NOTICE

Use appropriate ladders/steps to gain access to the boom tip and deck to perform this installation.

INSTALLING AND STOWING BOOM EXTENSION:

1. Set the outriggers.

2. Raise and extend the boom about 30 feet (9 m) above the ground, paying out load line until hook is just above ground.

3. Position boom over front, lower and retract boom, leaving the load line on the ground.

4. If the sheave block is installed, remove it.

5. Remove load line from tip sheaves and lay over side of boom opposite of the stowed boom extension.

6. Make sure the front stow pin is in place and the attach pins are removed from the lugs on the boom tip and the mating lugs on the boom extension.

7. Remove the rear cotter pin and swing the boom extension away from the rear end of the boom until the attaching lugs mesh on the right-hand side of the boom.

8. Insert the attach pins in the right-hand lugs and retain them with the hairpin cotters.

9. Remove the front stow pin and swing the boom extension around to the front until the left hand lugs mesh.

10. Insert the attach pins in their outer lugs and retain them with hairpin cotters. To insert the fourth pin, it may be necessary to rock boom extension side to side, or up and down.

11. Replace the front stow pin in its brackets for storage and insert their hairpin cotters.

12. Lay the load line over the main boom and extension tip sheaves and insert the cable retainer pins and cotters.

13. Install the downhaul weight, wedge socket and swivel hook on the load line if they are not already installed.

14. Disconnect the anti-two-block wiring cable from the switch on the main boom tip and connect it to the cable connector on the boom extension base.

15. Check the Anti-Two-Block system for proper operation and Set Rated Capacity Limiter.

16. Stow the Boom Extension by performing steps 1-3 and by reversing steps 14-7, and then follow steps 17-20.

17. Lay the load line back in the main boom tip sheaves and insert both retainer pins & cotters.

18. Replace all of the pins in their lugs for storage and insert their haipin cotters.

19. Install the sheave block on the load line, if desired.

20. Check the Anti-Two-Block system for proper operation, and set Rated Capacity Limiter configuration.

SETTING THE OFFSET ANGLE ON THE OFFSETTABLE BOOM EXTENSION:

1. The boom extension must be installed on the main boom tip and the load line, downhaul weight and wedge socket installed on the boom extension and secured with all of the retainer pins.

2. Draw the load line taut with the hoist by pulling the downhaul weight against the bottom of the tip sheave plates while holding the anti-two-block override switch under the control panel.

W A R N I N G

Be careful not to operate the TELESCOPE EXTEND while overriding the anti-two-block system. This may break the load line and allow the boom extension and downhaul weight to fall, causing death or serious injury to personnel.

3. Remove the offset index pin from the boom extension knuckle. To loosen the pin it may be necessary to rock the boom extension tip up and down manually while maintaining the proper tension in the load line.

4. Lower or raise the load line with the hoist until the 0, 15, or 30 degree offset holes align in the knuckle.

5. Insert the index pin in the knuckle and retain it with the hairpin cotter.

6. Set Rated Capacity Limiter configuration.

STOWING THE BOOM EXTENSION:

1. If the boom extension is offset to 15 or 30 degrees, return it to the zero offset position as described above.

2. Perform steps 16-20 of the boom extension installation and stowing procedure.

3. Set Rated Capacity Limiter configuration.

CAPACITY EXAMPLES FOR BOOM EXTENSION

The boom extension may lift loads in any swing position when the outriggers are OUT & DOWN. The boom extension may lift loads over the front on IN & DOWN outriggers. Do not lift loads with the boom extension when on rubber or over the side on IN & DOWN outriggers. The LOAD RADIUS and BOOM EXTENSION ANGLE capacity charts must both be considered when using the boom extension. The smaller capacity specified by the two charts must be used. Radii below the double lines on the capacity chart require an installed boom extension to reach them. Refer to the Capacity Chart on page 2-21 for the following examples:

Example #1: The boom is elevated to 50° over the side of the crane. The boom extension is offset to 15°, and the load radius is 44 feet (13.0 m). The boom is extended to the 59' (18.0 m) length. The outriggers beams and jacks are fully extended on concrete pavement and the crane is level. The column for "OUT & DOWN 360° ROTATION OR IN & DOWN OVER FRONT" with a 59' (18.0 m) long boom shows the capacity at the 44-foot (13.0 m) load radius to be 6200 pounds (3000 kg). The column for "BOOM EXTENSION, MAIN BOOM ANGLE 50°" shows the capacity for the 15° boom extension offset to be 2900 pounds (1300 kg). Since 2900 pounds (1300 kg) is less than 6200 pounds (3000 kg), the load (including the downhaul weight and slings) must be limited to 2900 pounds (1300 kg).

Example #2: The boom is elevated to 15° over the side of the crane. The boom extension is offset to 0°, and the load radius is 80 feet (24.0 m). The boom is fully extended to the 68.5' (20.9 m) length. The outrigger beams and jacks are fully extended on concrete pavement and the crane is level. The column for " OUT & DOWN 360° ROTATION OR IN & DOWN OVER FRONT " shows the capacity at the 80-foot (24.0 m) load radius to be 2100 pounds (1000 kg). The column for " BOOM EXTENSION, MAIN BOOM ANGLE 15°" shows the capacity at the 0° boom extension offset to be 2750 pounds (1200 kg). Since 2100 pounds (1000 kg) is less than 2750 pounds (1200 kg), the load must be limited to 2100 pounds (1000 kg).

FRONT AUXILIARY WINCH:

The front auxiliary winch is mounted to the front bumper and is controlled from the operator compartment. The winch has 125' (38 m) of 9/16" (14 mm) 6x36 EIP-RRL-IWRC wire rope with a 33,600 pound (150 kN) minimum breaking force and a 5-ton (4.5 metric ton) rated hook. The winch is capable of pulling 20,000 pounds (6800 kg) on the bare drum. The winch can pull 13,400 pounds (6100 kg) on the 4th layer. Do not exceed the working strength of the hook and rope. Limit pulls to 10,000 pounds (4.5 metric ton).

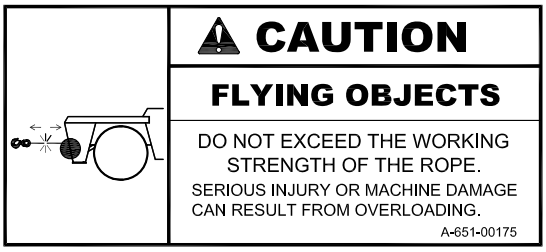

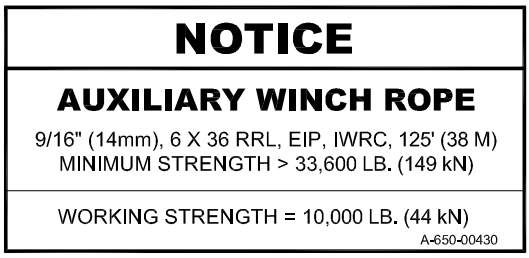

Included with this option is a pivoting roller guide and a shut-off limit switch. The switch is designed to block any further pulling-in of the rope once the hook nearly reaches the rollers. Paying-out the rope will not be affected. A pivot link is provided above the winch mounting to store the hook while not in use.

The front auxiliary winch is designed for the following uses:

1. As a tag line for restraining loads on the boom load line during pick-and-carry operation.
2. To drag loads on the ground to a position where they may be safely lifted with the boom.
3. To pull the crane out of mud or other obstacles.
4. To pull a smaller vehicle that is stuck.

W A R N I N G

The front winch is not designed for lifting personnel or loads. Observe the following safety rules:

1. Never lift or carry personnel with the winch and wire rope.

2. Do not allow anyone to stand near or under the load being moved.

3. Be sure the cable is securely anchored in the drum and that at least 5 wraps of rope remain on the drum to insure against the rope pulling out of its anchor.

4. Stand clear of a loaded winch cable. If it breaks, it can be very dangerous.

5. Keep hands clear of the winch and any sheaves that the cable passes over when the winch is being operated.

6. Do not over-stow the hook into the roller guide. This may damage the hook, rope, or the roller guide. A properly adusted system should not shut-off pulling-in during normal operations but only when end of rope firmly contacts roller guide and before any damage occurs. See Maintenance section for proper shut-off switch adjustment.

7. Do not use the drive train to pull a load that is too heavy for the winch to pull. The drawbar pull of the IC-400 can easily exceed the working strength of a single part of line for the front winch.

PINTLE HOOKS:

Available Pintle Hooks allow the crane to tow other disabled vehicles and trailors, and drag loads.

1. Observe the capacity ratings marked near the hook when towing.
2. Exceeding the capacities can damage the drivetrain.
3. Use slow and smooth motions to avoid shock loads or overrunning loads. Make sure vehicle being towed is occupied to steer and brake.

Pintle Hooks also allow the crane to be towed.

1. Use appropriately sized straps or chains.
2. Place transmission in Neutral. Utilize an Operator to activate brakes as needed and steer the crane while being towed.
3. Do not exceed a towing speed of 5 mph (8 kph).

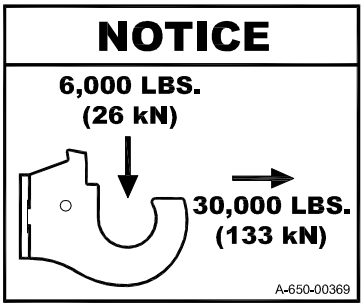

CAMERA SYSTEM:

Availible Camera System provide four cameras and an in-cab monitor. The system automatically turns ON with the keyswitch and switches to the appropriate view when triggered.

1. Rear View: Mounted just above bumper level and is activated whenever the transmission lever is out of neutral.

2. Hoist View: Mounted behind 2-speed hoist to view spooling of cable onto hoist drum. No trigger needed as this is the default view.

3. Right-Front Outrigger View: Mounted in the right-front wheel well and positioned to view the surroundings where this outrigger beam and leg can move. Activated when either right-front outrigger pad buttons are utilized.

4. Right-Rear Outrigger View: Mounted in the right-rear wheel well and positioned to view the surroundings where this outrigger beam and leg can move. Activated when either right-rear outrigger pad buttons are utilized.

These cameras are compensated for low-light conditions. The in-cab monitor had a contrast adjustment and other features.

SWITCH AND INDICATOR SYMBOLS ON BMC CRANES

The following list shows the symbols used to label switches and indicators on BMC cranes. Most symbols are derived from the ISO 3767-1:1998(E) standard. Not all symbols will be included on your BMC crane.

	On/Start
	Off/Stop
	Battery not charging
	Hour meter
	Read operator's manual
	Sound level notification
	Headlights (main/high beam)
	Work light
	Hazard lights
	Rotating beacon or strobe lights
	Turn signals left/right
	Windshield wiper switch

	Windshield washer switch
	Windshield defroster switch
	Heater switch
	Air conditioner switch
	Ventilation fan switch
	Parking brake is set
	4-wheel (round) steer
	Rear-wheel steer
	Crab steer
	2-wheel drive
	4-wheel drive
	Steering wheel tilt

	Tire pressure
	Lift point
	Tie-down point
	Transmission oil fill location
	Transmission oil pressure
	Transmission oil temperature
	Brake fluid fill location
	Hydraulic oil low-level mark
	Hydraulic oil filter restriction indicator
	Hydraulic temperature gauge
	Hydraulic oil temperature high
	Hydraulic oil pressure gauge OR hydraulic oil pressure low
	Positive polarity
	Negative polarity

	Engine oil pressure low
	Engine coolant fill location
	Engine coolant temperature high
	Engine coolant low level mark
	Engine air filter restriction indicator
	Engine start
	Engine idle set
	Check engine
	Stop engine
	Wait to start/ engine preheat/ grid heater/ glow plug switch
	Gas fuel only
	Diesel fuel only
	Fuel level gauge
	Drain

MAINTENANCE

SAFETY RULES

1. Before doing maintenance, lower load, lower boom and retract boom, move to a safe place, shutdown engine, and remove key. Place warnings on the ignition switch and crane controls to prevent unauthorized starting or movement during maintenance. Disconnect battery using Battery Disconnect Switch mounted on front hood cover, and lockout if needed.

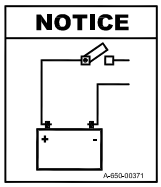

2. Relieve hydraulic pressure when working on hydraulic parts. See instructions on page 3-42.

3. Allow fluids and parts to cool before working on them.

4. Read maintenance instructions before beginning work.

5. Do not check for hydraulic leaks with hands. If a mist of hydraulic oil is noticed around a line or component, use cardboard or other material to check for location of leaks. High pressure fluid leaking from a small hole, can be almost invisible, yet have enough force to penetrate the skin. If injured by escaping fluid, see a doctor at once. Serious reaction or infection can occur.

6. Wear safety glasses and shoes.

7. Do not wear loose-fitting or torn clothing.

8. Remove rings and other jewelry.

9. Wear heavy leather gloves when working on wire rope.

10. Keep fingers, clothing and hair away from moving parts.

11. To prevent falls, clean areas of crane that are stepped on for access to crane parts. Wear slip resistant footwear. Use appropriate ladders/steps to gain access to boom tip and deck.

12. Avoid placing body parts in pinch points. Use tools that extend through the pinch points when possible. Block the moving parts securely when it is necessary to work in pinch point areas.

13. When inflating or adding air to a tire, place a tire cage over the tire and use a clip-on inflater chuck with an extension hose that will permit standing behind the tire tread when inflating. Use proper tire handling equipment when changing any tires of this size.

14. Do not work on any machine that is supported only by jacks or a hoist. Always use adequate blocks or jack stands.

15. If it is necessary to work on the boom in an unstowed condition, block it to prevent it from dropping unexpectedly.

16. Use a hoist when lifting components that weigh 50 pounds (22 kg) or more. Follow all hoist and rigging safety rules.

17. Do not use lower grade fasteners if replacements are necessary.

18. When reinstalling wiring or plumbing after repairs, be sure that it will not be damaged by rubbing against sharp, rough or hot surfaces or edges.

19. Never use a rope clip on live side of the load hoist rope. This will seriously weaken the rope. Death or serious injury can result from the misuse of a rope clip on the hoist rope.

20. Replace any instruction or warning placards that are lost or damaged or not readable.

21. Always replace all guards and covers after working on the crane.

22. After working on the hydraulic system, remove air from the lines and cylinders involved by cycling them full stroke with the engine running until the functions operate smoothly.

23. When welding on the crane or on anything connected to the crane by wire rope or other conducting link, disconnect the battery, the Rated Capacity Limiter components, controls system and it's computer, transmission shifter, main VEC, optional camera monitor, lower control valve and the engine electronic control module. When welding on the boom or turn-table assembly, disconnect the cable reel, cylinder transducers, boom control valve, and any other electronic components connected above the slipring.

24. When using pressure spray to clean the crane, cover all electronic components with sheets of plastic to protect them from spray.

25. Do not allow antifreeze to contact skin. Rinse off spills immediately with plenty of water. Antifreeze is highly toxic if ingested.

26. Always disconnect negative cable first and refasten last to prevent accidental short through chassis components.

27. Dispose of all hazardous substances properly by following local regulations.

CAUTION

Even with low voltage electrical systems, severe arcing can occur. Electrical shock or component damage can result from contact with energized conductors. Use caution when working with any electrical device.

MAINTENANCE

The Broderson IC-400 Industrial Crane will perform better and longer if a program of inspection, lubrication, adjustment and general preventive maintenance is followed. We recommend the following schedule:

NEW UNIT INSPECTION AND TEST

The following inspection and test should be made before placing the unit on the job. This will insure that no damage or loss of operating capability occurred during shipment.

1. Check for physical damage.
2. Check for leaks at fittings and drips under chassis.
3. Check radiator coolant level.
4. Check engine oil level.
5. Check hydraulic oil reservoir level.
6. Check transmission oil level.
7. Check fuel tank level.
8. Check tire pressure.
9. Check for loose pins, bolts, and retainers.
10. Start engine.
11. Check for operation of foot brake.
12. Check for operation and adjustment of parking brake.
13. Check for operation of accelerator pedal.
14. Check power steering for operation.
15. Check operation of transmission gear selector lever.
16. Check lights for operation.
17. Test-drive unit and check for normal operation.
18. Check operation of hydraulic outriggers.
19. Check boom rotation.
20. Check boom elevation.
21. Check boom extension and sequencing (pay out hoist cable during power extension).
22. Check boom chains and chain sheaves.
23. Perform hoist cable break-in procedure as described on page 3-23.
24. Check anti-two-block system for proper operation and cutout of boom functions.
25. Perform a load test according to the Rated Capacity Limiter Operation Manual.
26. Check the outrigger warning light for proper operation as described on page 2-17.
27. Check emergency stop switch and seat switch operation.
28. Check lubrication points and condition of wire rope.

W A R N I N G

When the Rated Capacity Limiter is inoperative or malfunctioning, it must be repaired as soon as reasonably possible. When a lift must be made without a properly functioning load indicator or RCL, the designated lift supervisor must establish procedures for determining load weights and load radii and conducting the lift safely.

OPERATOR INSPECTION AND TEST

An operator, in the course of normal operation, should make certain observations, inspections and tests to assure that the unit is ready to perform safely.

Daily:

1. Check levels of engine oil, coolant and transmission fluid.
2. Check air cleaner intake system for cracks or looseness.
3. Check general condition of tires.
4. Visually inspect for loose pins, bolts, physical damage and leaks.
5. Check hydraulic hoses, particularly those that flex during crane operation.
6. Check hydraulic oil level.
7. Check fuel level.
8. Check hydraulic filter indicator icon on engine display after running at least twenty minutes.
9. Check foot brake operation. Check for warning icon operation as shown in brake maintenance section.
10. Check parking brake operation.
11. Check power steering operation.
12. Observe chassis for normal driving operation.
13. Observe boom operation for normal power, speed and sequencing.
14. Check load line and hooks for damage.
15. Check condition of sheaves and load line retainers.
16. Check anti-two-block system for proper operation.
17. Check back-up alarm for proper operation.
18. Check operation of all transmission gears, forward and reverse.
19. Clean all glass (if equipped) and check for cracks.
20. Check operation of all warning and safety devices.
21. Check operation of Rated Capacity Limiter according to the RCL Operation Manual.
22. Check the outrigger warning light for proper operation as described on page 2-17.
23. Check seat switch and emergency stop operation.
24. Check Drum Rotation Indicator.
25. Cummins QSB 4.5L Diesel Engine, per engine manual:
    a. Check crankcase breather tube.
    b. Drain water from diesel fuel filter.
    c. Inspect cooling fan.
    d. Check dust ejection valve.
    e. Inspect drive belts.
    f. Check air cleaner restriction indicator.

Weekly:

1. Check tire pressure: 100 PSI (690kPa).
2. Check for loose wheel nuts. 475 foot-pounds (645N-m) torque required.
3. Check lights and turn signals.
4. Check power steering lines for damage.
5. Check brake lines for damage.
6. Check operation of horn.
7. Check operation of hoist brake for smoothness.
8. Check outrigger holding valves for operation.
9. Check boom topping holding valves for operation.
10. Check rotation gears for looseness or backlash.
11. Check boom extension cylinder for proper sequencing and holding valve performance.
12. Check operation of windshield wipers.
13. Boom extension (if equipped) properly pinned with retainers in place.
14. Check boom chains and chain sheaves.
15. Check hydraulic oil level in parking brake intensifier reservoir located in engine bay.

Monthly:

1. Check accumulator pre-charge as shown in brake maintenance section.

IC-400 MAINTENANCE CHECKLIST

Refer to the component maintenance section of this manual and to the engine operator's manual for complete instructions.

50 HOUR INTERVAL:

1. 50 hour lubrication as shown on lube schedule.
2. Inspect wire rope thoroughly.
3. Inspect for physical damage and leaks.
4. Clean radiator fins and check coolant level.
5. Check tire pressure and condition. Inflate tires to 100 PSI (690kPa).
6. Check fluid levels in engine, transmission, hydraulic tank, parking brake.
7. Check air filter restriction indicator.
8. Inspect air intake and exhaust systems for cracks, leaks and loose bolts.
9. Change engine oil and filter after first 50 hours. Replace at intervals specified by engine manufacturer thereafter.
10. Check tension and condition of engine belts.
11. Check for the hydraulic filter indicator icon on the display with warm oil; change element if icon is present. Change the hydraulic filter after first 100 hours and at 500 hours thereafter.
12. Check rotation gear and pinion fit and gear train backlash.
13. Check rotation bearing and gearbox bolt tightness.
14. Check axle mounting bolts.
15. Torque wheel mounting nuts. 475 foot-pounds (645Nm) torque.
16. Check for loose pins or pin retainers.
17. Check brake lines and steering lines for damage.
18. Inspect sheaves and hooks for damage or excessive wear.
19. Visually inspect welds on boom, turret and outriggers.
20. Perform a load test according to the Rated Capacity Limiter Operation Manual.
21. Check operation of outrigger warning light as described on page 2-17.
22. Clean the two steering alignment proximity sensors' tips with a rag.
23. Check horn, outrigger alarm, and backup alarm.
24. Change transmission fluid and filter after the first 20 hours. Change filter whenever the indicator light stays on with the fluid above 100°F (38°C) or every 200 hours or 6 months, whichever is sooner. When the filter is changed because the indicator shows it is plugged, change the fluid at ever other filter change. When the filter is changed at 200 hour intervals and the indicator light has not been on, change fluid every 600 hours.
25. Measure extension and retraction chain sag and adjust if necessary. See page 3-39.
26. If equipped, clean optional camera system lenses.

250 HOUR OR 3 MONTH INTERVAL:

1. 50 hour maintenance.
2. 50 and 250 hour lubrication.
3. Clean engine and battery.
4. Check engine mounts and radiator mounts.
5. Adjust and lubricate boom chains and chain sheaves.
6. Inspect all bolts on the machine for tightness.
7. Visually inspect all welds for cracks.
8. Check hydraulic fittings and centerpost for leaks.
9. Check parking brake pad-to-disc clearance.
10. Perform all maintenance required by engine manual.

500 HOUR OR 6 MONTH INTERVAL:

1. 250 hour maintenance.
2. 50, 250 and 500 hour lubrication.
3. Check antifreeze for protection level and cleanliness.
4. Change hydraulic filter element, if not changed in the last 250 hours and inspect oil from element.
5. Change transmission filter element and inspect oil from element.
6. Check condition of all operational and warning placards.
7. Torque mounting bolts on rotation bearing and gearbox, winch and axles.
8. Inspect boom sections for signs of overload, excessive wear, or other damage.
9. Perform all maintenance required by engine manual.

1000 HOUR OR 12 MONTH INTERVAL:

1. 500 hour maintenance.
2. 50, 250, 1000 hour and 12 month lubrication.
3. Perform engine maintenance specified in engine manual.
4. Change hydraulic fluid and filter and clean breather and reservoir.
5. Change transmission fluid and filter and clean strainer.
6. Replace vapor blocks in slip ring and main VEC. See turret installation and wire routing diagram in parts manual.
7. Remove tires and inspect brake pads and rotors. Refer to Brake System Maintenance on page 3-13 for replacement criteria.

24 MONTH INTERVAL:

1. 12 month maintenance.
2. Pressure test engine cooling system.
3. Flush cooling system.
4. Change engine thermostat.
5. Fill with new coolant and distilled water.
6. Perform all maintenance required by engine manual.

S/N:_____HOURS:_____DATE:_____BY: _____

COMMENTS & PARTS REQUIRED:_____

_____

_____

_____

_____

_____

FLUID VOLUME

Hydraulic reservoir – 81 gallons (307L)
Fuel tank – 50 gallons (190L)
Planetary hoist – 6.5 quarts (6.2L)
Axle – Differential Housing – 4.75 gallons (18.0L), Hubs – 1.6 gallons (6.2L)
Transmission – 16 to 20 quarts (15 to 19L)
Engine oil capacity – 11.6 quarts (11L)
Engine cooling system, Tier 3 – 14 quarts (13.2L) fill to bottom of fill neck in surge tank.

IC-400-3A LUBRICATION CHART

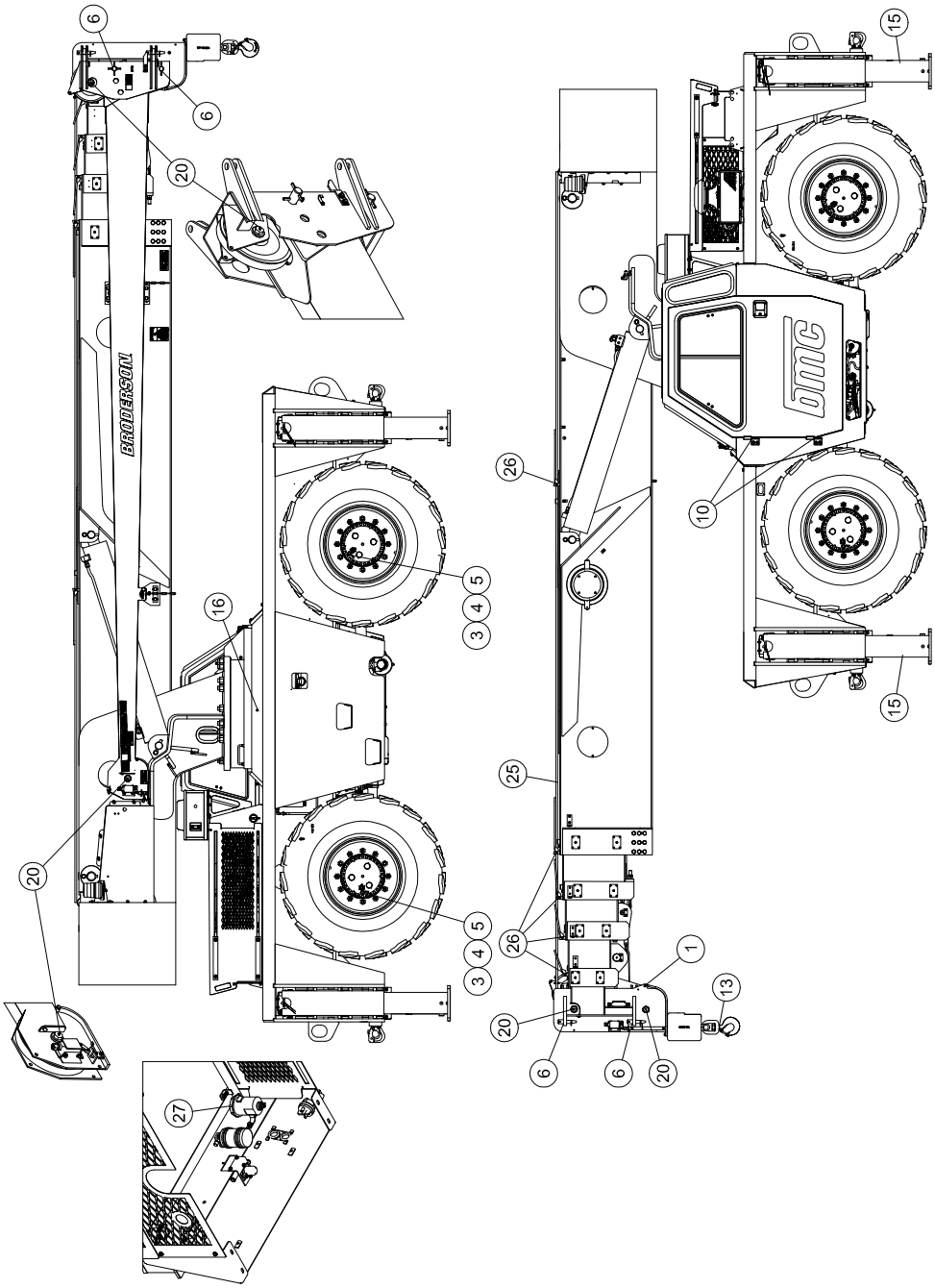

IC-400-3A LUBRICATION CHART

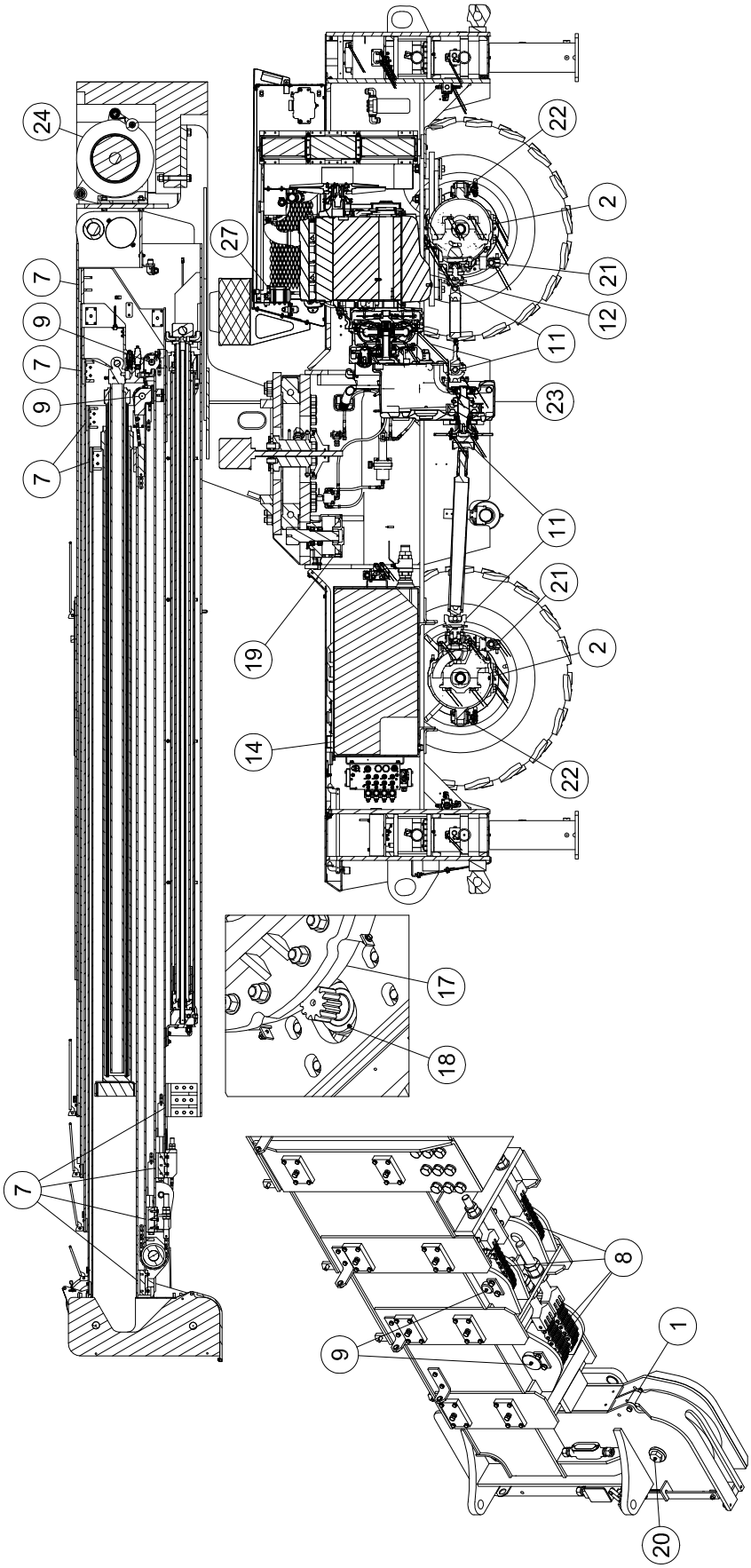

IC-400 LUBRICATION SCHEDULE

ITEM	DESCRIPTION	LUBE	LUBRICATION INTERVALS					NOTES
			50 HOUR	250 HOUR	500 HOUR	1000 HOUR	MONTHS	
1	Anti-Two-Block Arm	SIL	X					2 Points
2	Axle Differential	MPL	X				12	Check @50, Change @12 Mo.
3	Axle Kingpins	MPG	X					8 Zerks
4	Axle Hubs	MPL	X				12	Check @50, Change @12 Mo.*
5	Axle Hub U-Joints	MPG		X				8 Zerks
6	Boom Ext. Pins	MPG	X					Wipe on.
7	Boom Rub Pads	SIL	X					Spray or Wipe on Boom
8	Boom Chains	EO		X				Spray or Wipe*
9	Boom Chain Sheaves	MPG		X				6 Zerks*
10	Cab Hinges & Latches	SIL		X				
11	Drive Shaft Joints	MPG	X					4 Zerks
12	Engine Oil	EO	X	X			3 Max.	Check Daily, Change @50 Hrs. then @250 or 3 Mo. Max.
13	Hook Swivel & Pin	SIL	X					Sheave block and single part line
14	Hydraulic Oil	HO	X			X	12 Max.	Check Daily, Change @1000 Hours or 12 Mo. Max.*
15	Outrigger Legs & Beams	MPG	X					Wipe on legs & bottom of beams
16	Rotation Bearing	MPG	X					1 Zerk*
17	Rotation Gear Teeth	OGG	X					Brush On.*
18	Rotation Pinion Brg.	MPG	X					1 Zerk
19	Rotation Gearbox	WGO		X			24	Check @250, Change @24Mo.
20	Sheave Pins	MPG			X			2 Zerk Std, 2 Boom Ext.
21	Steering Tie Rod Ends	MPG			X			4 Zerks
22	Steering Cyl. Ends	MPG			X			4 Zerks
23	Transmission	ATF		X			12 Max.	Check Weekly. Change @ 600 Hrs. Change filter @200 Hrs.*
24	Hoist	MPL		X			12	Check @250, Change @12 Mo.
25	Wire Rope	2-X	X					Spray, Brush or Soak.*
26	Wire Rope Retainers	SIL	X					
27	Park Brake Reservoir	ATF					12	Check weekly, change @ 12 Mo.
28	Sheave block sheave pin	MPG	X					2 Zerks
29	Sheave block trunnion	MPG	X					1 Zerk

*See Procedures in Manual

LUBE SYMBOLS

2-X - AMOVIS #2-x
ATF - Mobil ATF D/M or equivalent
EO - Engine Oil - See Specs in Engine Manual
HO - Hydraulic Fluid - See Specs in Hyd. Sec.
MPG - Multi-Purpose Gun Grease
MPL - Multi-Purpose Gear Lube, SAE 80W-90
OGG - Open Gear Grease, Such as Mobilkote S
SIL - Silicone Lube, Aerosol with Concentrating Tube
WGO - Worm Gear Oil, Exxon Cylesstic TK460

BOOM CHAIN LUBRICATION

Put the crane on out & down outriggers before beginning. The machine may tip in other configurations. Extend the boom fully and lower to horizontal. Turn off the engine. Release trapped pressure as described on page 3-42. Using appropriate ladders or steps, lubricate inner chains and chain sheaves through windows. There are grease fittings on chain sheave shafts both inside and outside the boom. Reach in through boom windows with a long tipped oil can and spray chains generously and grease sheave fittings. Do not attempt to grease chain shafts or oil chains inside boom with engine running, as boom may move while your hands are inside.

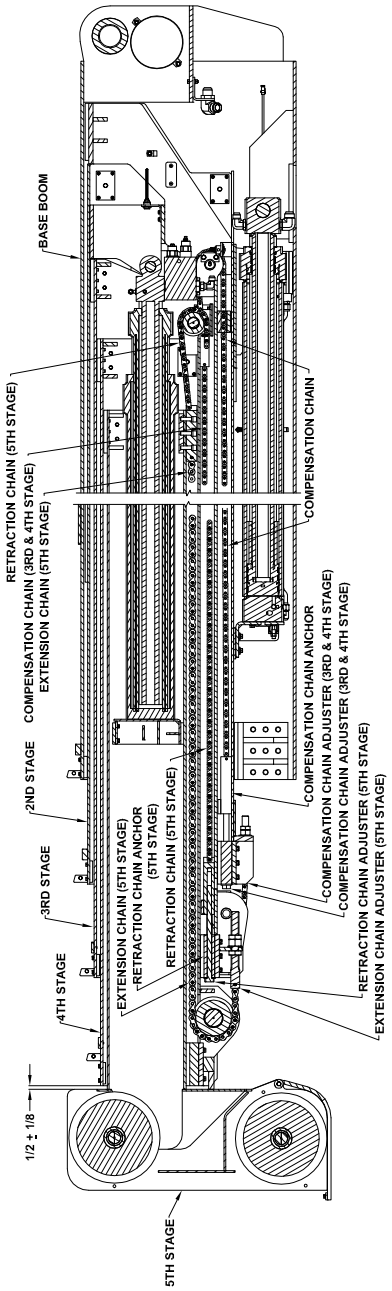

ILLUSTRATION 1

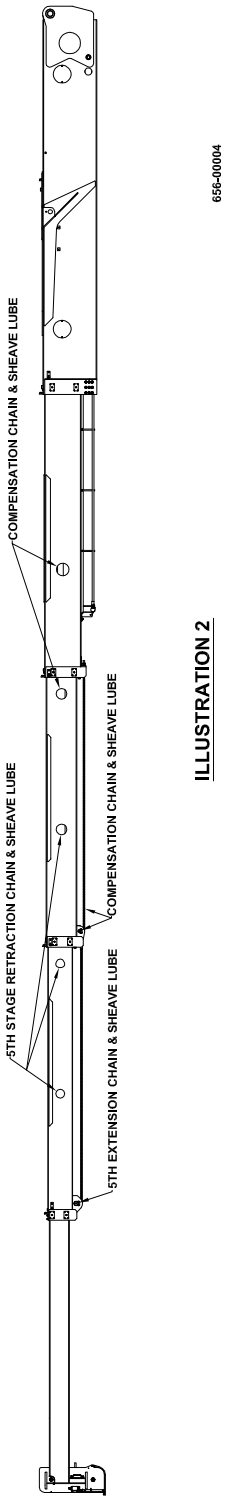

ILLUSTRATION 2

RUB PAD ADJUSTMENT

The rub pads on the sides of the boom may require adjustment as they wear. Adjustable rub pads are located at the tips of the outer boom, second stage, third stage, and fourth stage. Adjustable rub pads are also located at the bases of the second stage, third stage, and fourth stage.

To determine if adjustment is required:

1. Set the outriggers.
2. Extend and raise the boom fully.
3. Raise or lower the hook so that the wire rope is coming off the extreme left side of the hoist.
4. Check to make sure the wire rope does not contact the mounts for the wire rope retainers.
5. Lower the boom and check to make sure the rope does not slip off the sides of the rub pads mounted on the top of the boom.
6. Repeat steps 2-5 with the wire rope at the extreme right side of the hoist.
7. Extend and raise the boom fully.
8. Lift a 5000-10000 pound (2250-4500 kg) load, in this position, just off the ground.
9. Check that the boom appears visually straight, and that stages are not leaning in alternating directions. For example, the second and fourth stages lean left, while the third and fifth stages lean right.

Rub pads can be tightened as necessary using a 9/16 wrench.

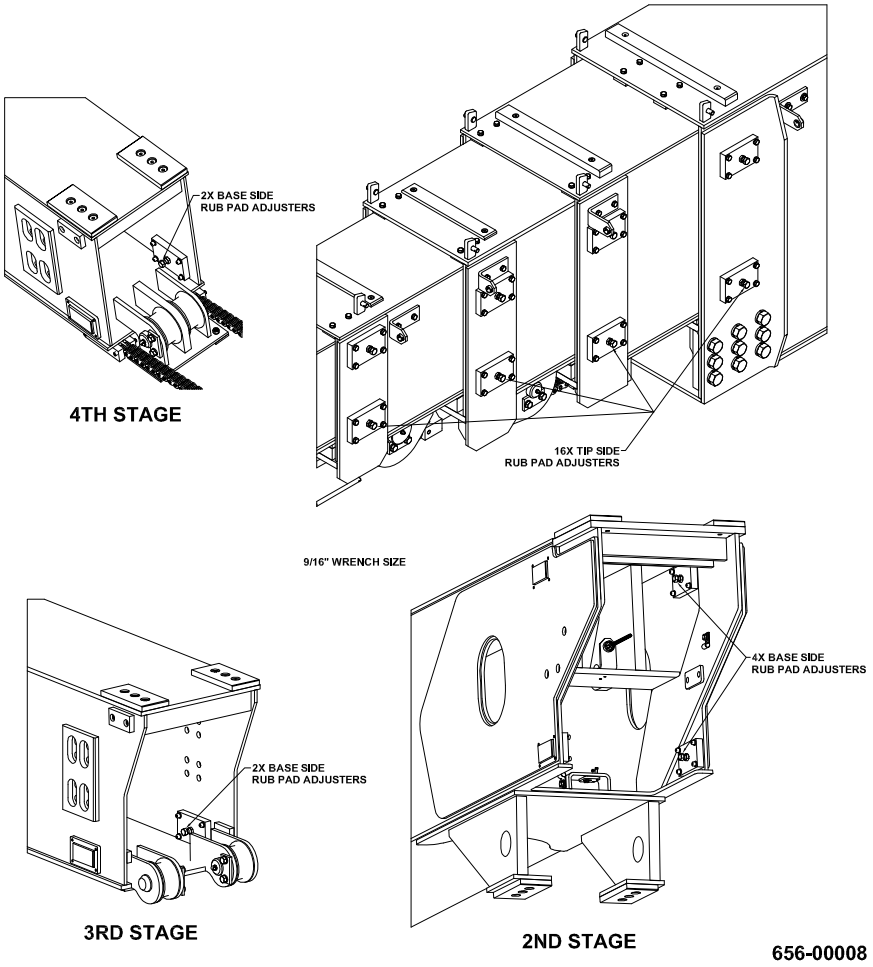

ROTATION BEARING LUBRICATION

There is one grease zerk remote mounted in on the right side of the chassis pedestal. It is located just above the battery compartment. This should be used to lubricate the bearing every 50 hours. Rotate the turntable at least one revolution while pumping grease into the zerk. Use about 8 ounces (230cc) of grease each time the bearing is lubricated.

Also, lubricate the gear teeth of the rotation bearing at the 50 hour interval. Remove the pinion cover. Brush open gear grease, such as Mobilkote-S, on the teeth on each side of the pinion at four places around the bearing. Rotate the turntable several times and check the coverage of the grease on all of the teeth. Replace the pinion cover.

BRAKE SYSTEM MAINTENANCE

W A R N I N G

The brake system of the IC-400 requires routine maintenance to ensure proper operation. Failure to properly maintain the brake system may result in property damage, injury, or death.

Brake Malfunction Icon: Located on the dash display. If the icon is present during normal crane operation, driving the crane, or operating the brakes, discontinue operating the crane and take out of service. This icon indicates that the pressures in the brake accumulators are too low for reliable brake operation. The problem must be found and fixed before driving the crane any further.
To check that the brake malfunction icon is operating correctly, turn the ignition key to the ON position but do not start the engine. Pump the brake pedal several times to discharge the accumulators. If the icon does not turn on, there is a malfunction in the sensor or wiring. The problem must be found and fixed before driving the crane.

CAUTION

Brake dust may be hazardous. Observe precautions to prevent breathing large amounts of brake dust.

Brake Pads and Rotors: Recall that the steering system on the IC-400 is non-load reactive. The operator will not be able to “feel” pad or rotor problems in the steering wheel. On a weekly basis, check to see if the rotors appear worn, grooved, warped, or otherwise damaged. When applying the brakes, listen for squeaking. Observe the wheels for any vibration or unusual motion during braking. If any of these conditions are present, a thorough inspection is required to find and fix the source of the problem.

Regardless of other indications, a thorough inspection of the pads and rotors must be performed at least every 1000 hours. Remove the tire and wheel assemblies. Note that proper tire handling equipment must be used when removing tires of this size. Inspect the pads, and replace them if they are cracked or worn. Replace pads if the lining without metal back plate is less than 0.125” thick (3.2 mm). Inspect the rotors, and replace them if they are grooved or warped. Replace rotors if they are less than 0.5” (13 mm) thick.

Brake Unloading Valve: Mounted under the floorboard of the operator’s compartment. Also called an accumulator charging valve. The brake unloading valve sends pressure to the accumulators if low pressure is detected. No routine maintenance is needed on the brake unloading valve.

The operator can hear the accumulators charge. If the accumulators charge frequently without depressing the brake pedal, the brake unloading valve, accumulators, or brake hoses may be leaking. If no leaks can be found, check accumulator pre-charge pressure. If pre-charge pressure is adequate, it may be necessary to repair or replace the brake unloading valve. If the accumulators do not charge, take a long time to charge, or cycle very rapidly, it may be necessary to repair or replace the brake unloading valve.
Relief pressure for the brake circuit is located in the unloading valve. It is set at 2925 psi (202 bar) at the factory. The relief pressure cannot be adjusted. The relief pressure can be checked by installing a pressure gauge at the P port of the valve.

Brake Modulating Valve: Directly connected to the brake pedal. This valve sends pressure and flow to the brake calipers when the brake pedal is depressed. Lubricate the pedal hinges with a silicone lubricant. No other routine maintenance is required.
If the brakes do not apply and the Brake Malfunction Light is not illuminated, the brake modulating valve may need repair or replacement. If the brakes do not fully release and the brake calipers are functioning properly, the brake modulating valve may need repair or replacement.

Brake Accumulators: Mounted under the floorboard of the operator's compartment. The brake accumulators store hydraulic oil under pressure for use at the brake calipers. They are bladder-type accumulators, and require a pre-charge pressure in the gas bladder. The brake accumulator pre-charge pressure must be maintained on a monthly basis as follows:

1. Set park brake or put machine on outriggers. Turn off engine.
2. Pump the brake pedal several times to discharge stored oil pressure.
3. Remove protective cap from the accumulator.
4. Connect a pressure gauge to the accumulator valve stem.

W A R N I N G

Accumulator pressure gauges will not detect accumulator pre-charge pressure if improperly used. Carefully review pressure gauge and pre-charging instructions included with commercially available gauge kits.

5. Measure accumulator gas pre-charge pressure. Nominal pressure is 1000 ± 100 psi (69 ± 6.8 bar).

W A R N I N G

NEVER use shop air or oxygen to pre-charge accumulators. ONLY use inert dry nitrogen (N_2) gas. Failure to use proper gas can cause accumulator damage or failure, leading to property damage, injury, or death.

6. If necessary, add only dry nitrogen gas (N_2).

7. Disconnect all gauges. Replace valve caps.

If the accumulators are unable to hold a pre-charge pressure, or if the brakes fail to operate properly, they may be damaged. The accumulator pressures should cycle between 2175 psi (150 bar) and 2675 psi (184 bar). Accumulator bladder replacement instructions and accumulator replacement instructions ship with replacement parts. In the event that instructions are not included, contact BMC. Proper procedure is necessary to prevent damage or premature failure of replacement parts.

TRANSMISSION MAINTENANCE

The transmission is a six-speed-forward, three-speed-reverse, Funk Model 2000, powershift transmission. The transmission is bolted directly to the flywheel housing of the engine and is connected by drive shafts to the front and rear axles. A torque converter transmits power from the flywheel to the transmission. The transmission gears are all constantly in mesh, and there is a series of clutches that control the direction and speed of the output.

TRANSMISSION OIL:
The oil used in this transmission is Mobil ATF D/M automatic transmission fluid, with the Allison C-3 rating. See the recommendations below. Other oils can cause shortened transmission life due to material incompatibility and inadequate frictional properties for clutch discs. The refill capacity is about four to five gallons (15 L to 19 L).

AMBIENT TEMPERATURE	TRANSMISSION FLUID SPECIFICATIONS
Above -10°F (-23°C)	Hydraulic Transmission Fluid Type C-3 or C-4, except Grade 30
Below -10°F (-23°C)	Type C-3 or C-4, except Grade 30 Auxiliary preheat required to raise oil temperature above -10°F.
Above 32°F (0°C)	Type C-3 or C-4 or C-3 Grade 30

CAUTION
Do not use any oil with an EP additive.

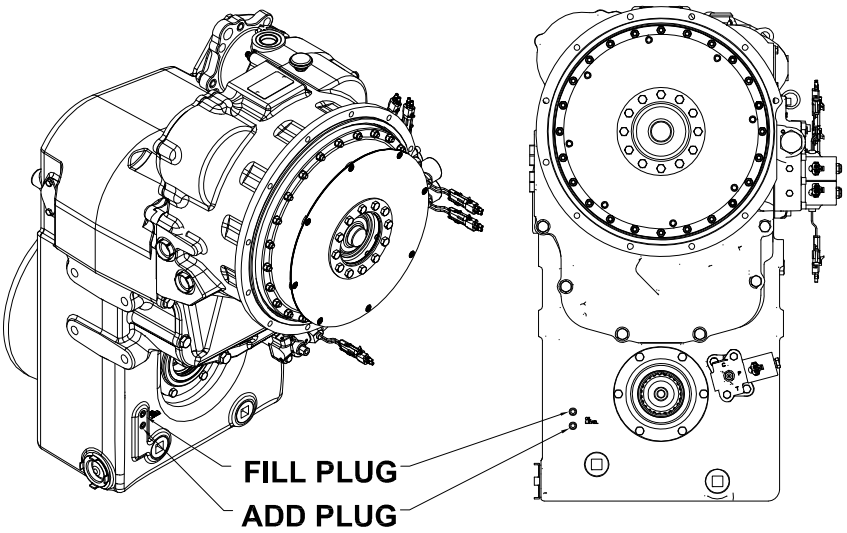

656-00005

The transmission dipstick is not easily accessible. Check the oil level weekly by removing the “ADD” plug on the transmission. The “ADD” plug is located near the left-hand side of the transmission, near the engine. Make sure the area around the plug is clean before removing. Check the oil level in neutral at idle speed with the oil warm. If oil weeps out of the hole, the oil level is sufficient. If no oil is present, stop the engine and install the “ADD” plug. Remove the “FILL” plug. With engine off, add oil through the dipstick tube or “FILL” plug hole until oil weeps out of the “FILL” plug hole.

TRANSMISSION FILTER CHANGE: (Note--The transmission filter may be found in the Parts Manual under "Engine Installation.")
The transmission utilizes a cooler that is part of the radiator package. The filter is located behind the radiator under the rear deck. Change the filter on a new machine after the first 20 hours. Thereafter, the filter should be changed whenever the indicator light on the dashboard stays on with the oil fully warmed up or every 200 hours or 6 months, whichever is sooner. Use the following procedure:

1. Clean the filter housing, element and nearby hoses.

2. Remove the used filter element and catch the oil in a clean bucket.

3. Empty the element into the bucket and examine the oil for foam, water and excessive particles. By checking the oil at every filter change, trends may be observed which could help in troubleshooting if problems develop.

4. Lubricate the seal on the new element and thread it onto the housing.

5. Tighten the element three-fourths of a turn after the seal contacts housing.

6. Run the engine at low idle and check for leaks.

7. Check the oil level as described previously and top off as needed.

TRANSMISSION FLUID CHANGE:
Change the transmission fluid on a new machine after the first 20 hours. If the filter is changed every 200 hours and the indicator light has not been on, change the fluid every 600 hours. If the filter has been changed more frequently because the indicator light has come on, change the fluid every other filter change. Use the following procedure:

1. Operate the transmission long enough to warm the oil above 100°F (40°C).

2. Remove the transmission drain plug and drain the oil. Check for water, foam or excessive particles in the oil.

3. Change the filter element as described previously.

4. Clean the suction screen.

5. Remove the transmission breather, wash it in clean solvent, blow it dry and re-install.

6. Clean and install the transmission drain plug.

7. Fill the transmission through the dipstick tube or ADD plug with four gallons (15 L) of Mobil ATF D/M or equivalent.

8. Run the engine at low idle and check for leaks.

9. Check the oil level as described previously.

TRANSMISSION SHIFTER:
The transmission shift lever assembly is an electrical device. The power source for the transmission shifter is a circuit breaker located in the main electrical enclosure. The main electrical enclosure is located in the battery compartment of the machine. See the wiring diagram in the Parts Manual for further details.

Before welding on the crane, disconnect the cable connector under the shifter assembly. See Maintenance Safety Rules.

TRANSMISSION HYDRAULIC SYSTEM:
A pump in the transmission provides hydraulic power for operating the clutches and the parking brake. It also provides flow for the torque converter and for lubrication. The hydraulic schematic is shown below.

Another solenoid valve, internal to the transmission, operates the shift cylinder for two-wheel drive. If pressure is lost at this control due to electric or hydraulic malfunctions, a spring will shift the cylinder to four-wheel drive.

There is a pressure intensifier on the right-hand frame rail near the transmission. This device multiplies the transmission pump pressure by five times and supplies the higher pressure to the parking brake release cylinder. Whenever the engine is running, this pressure is available through a solenoid valve to release the brake. If the engine stops or there is an electric or hydraulic malfunction that blocks the needed pressure, a spring will apply the parking brake. The dash switch will not release brake if the engine is not running.

There is a small reservoir located at the front of the engine compartment that supplies oil to the pressure intensifier. This should be checked weekly and maintained at the full mark with the same fluid oil used in the transmission.

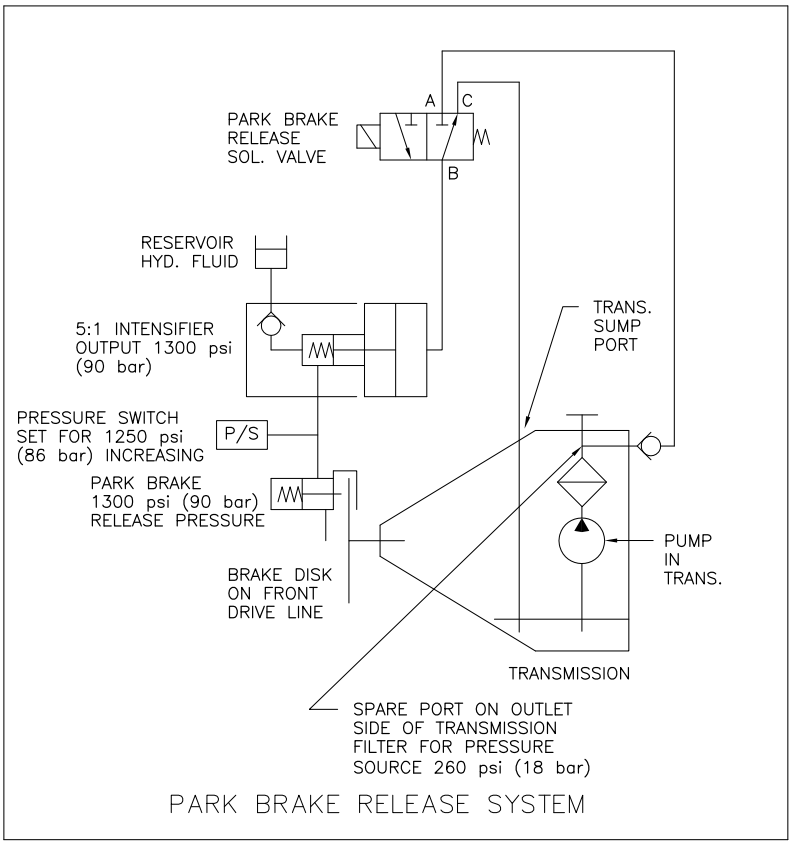

BLEEDING THE PARKING BRAKE:
If the parking brake hydraulic lines are disconnected for any reason, the lines will have to be bled. This is done at three points in the system: the pressure switch hose connection, the brake caliper bleed screw and the intensifier bleed screw. Before working on the parking brake system, set the outriggers or chock the wheels to prevent rolling. The bleeding must be done with the engine running and the parking brake switch in the OFF position. It may require several repetitions to remove all of the air. In between each repetition, turn the brake ON for about 30 seconds.

ADJUSTING THE PARKING BRAKE
Before working on the parking brake, set the outriggers or chock the wheels to prevent rolling. Release the parking brake. Find the adjustment bolt on the front of the brake caliper. Turn the adjustment bolt counterclockwise until loose. Slip a 0.012 (0.3 mm) inch feeler gauge between the disk and brake pad. Turn the adjustment bolt clockwise until the feeler gauge will just slip out.

TRANSMISSION TROUBLESHOOTING

If the transmission does not function properly, there are several simple checks that may reveal the cause. Try these checks first, before making a service call.

NOTICE

For transmission service or overhaul which is beyond the scope of this manual, please call your Broderson dealer or the Broderson service department to have a Funk Manufacturing Company service representative contact you.

1. If transmission feels like it is slipping, check the transmission oil level. High or low level can cause problems. If air bubbles are in the oil and the oil level is not too high, there may be a leak in the suction line of the transmission pump.

2. If it feels or sounds like something is dragging, check the parking brake. With the ignition switch on, move the brake switch from OFF to ON. The brake indicator light on the switch and the dash panel should go from OFF to ON. The light on the switch indicates that it is receiving power. The light on the dash panel indicates the pressure switch on the park brake assembly is detecting pressure.

3. If the lights are functioning but it appears that the brake is still dragging, raise the crane up on the outriggers, put the machine in third gear and spin the tires. If the disk is hot, the brake is dragging. Adjust the brake by the above procedure. If the brake still does not release, and there is no electrical problem, the cause may be low pressure in the transmission control circuit. Transmission pressure is approximately 260 psi (18 bar). Brake release pressure out of the intensifier is approximately 1300 psi (90 bar). It takes approximately 1300 psi (90 bar) to completely release the park brake. Check both pressure points to pin-point the problem.

4. If the Transmission fluid is overheating, it may be caused by plugged radiator fins, dirty fluid or using too high a gear. Drain the transmission, remove the filter and suction screen, check them for excessive contamination and save the contaminants for further examination.

5. If the shifter is not working, check the circuit breaker in the main electrical enclosure that supplies power to the shift lever. See the wiring diagram in the Parts Manual for the wire labels and functions. Replace only with a breaker of the same specified capacity. Shift solenoid damage could result with use of a larger breaker. If breaker continues to trip, check for a short circuit in the transmission harness. Check the connectors under the shift lever and near the solenoids in the engine compartment. Check for a bad solenoid coil.

6. If the shifter is still not working and the wiring appears to be sound, check the solenoids on the transmission control valve. The coils of two of the solenoids should be magnetized whenever the shift lever is out of neutral and the ignition switch is on. The following chart shows the solenoids that are energized as each gear is selected:

GEAR	SOLENOID # 1	2	3	4	5	6	RATIO
F1	X					X	8.20
F2	X				X		4.64
F3		X				X	3.53
F4		X			X		2.00
F5			X			X	1.41
F6			X		X		.80
R1	X			X			8.20
R2		X		X			3.53
R3			X	X			1.41

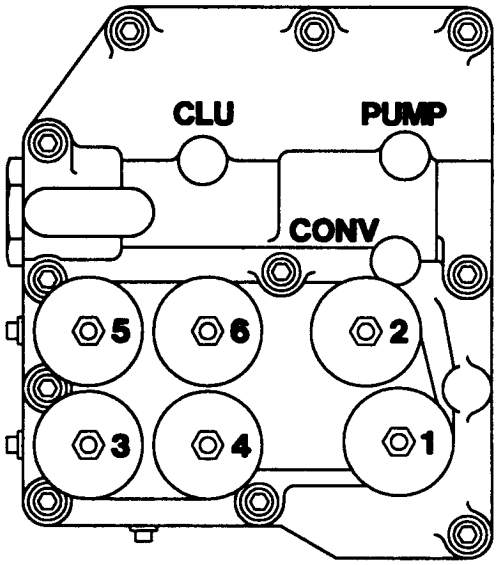

If abnormal contamination is found or a problem cannot be diagnosed and fixed by the above steps, please call your Broderson dealer or the Broderson Service Department to have a Funk Manufacturing service representative contact you.

TOWING

If the crane must be towed, run the engine at low idle to release the parking brake and lubricate the transmission. Do not exceed 10 mph (16 km/hr). If the engine cannot be run, release the parking brake by turning the adjustment screw counterclockwise until loose. Do not exceed 3 mph (5 km/hr) and one mile (1.6 km) total distance while towing. Afterward, readjust the park brake by the procedure on Page 3-19. If these conditions cannot be met, disconnect the drive lines and do not exceed 10 mph (16 km/hr).

WHEEL ALIGNMENT

Toe-in, which is the setting of the front wheels so they are closer together at the front than at the rear, is adjusted by lengthening or shortening the tie rod. Proper toe-in for the front wheels is 1/16" to 1/8" (1.6 mm to 3.2 mm) measured at the tire outer diameter. The rear wheels should be set at zero toe-in.

DRIVE AXLES--HUBS AND DIFFERENTIALS:

Maintain fluid levels as shown in the figures below. If necessary, add 80W-90 gear lube. Check every 50 hours and change every 12 months.

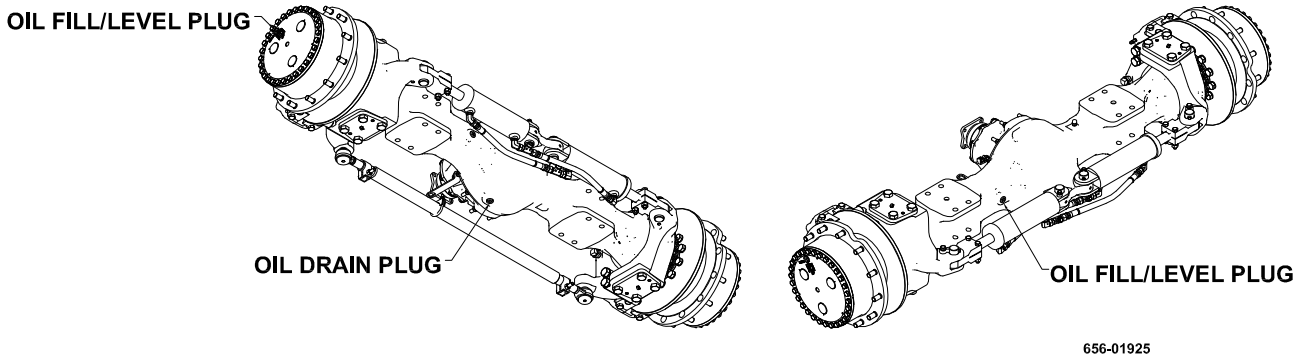

HOIST CABLE LUBRICATION

The hoist cable is a wire rope and should be cleaned and lubricated every 50 hours of normal operation and more frequently when used in dirty or corrosive environments. Whenever the rope is dirty or dry, it should be serviced. The rope should be cleaned with solvent and compressed air or solvent and rags. A wire brush may be used for difficult areas.

The recommended lubricant is AMOVIS #2-X. It should be sprayed or dripped onto the rope where it is bent as it passes over the tip sheave as it is spooling onto the hoist. Use an appropriate ladder or steps to access the tip sheave. Wrap rags around the wire rope behind the sheave and swab the excess oil that is carried along on the rope. Always wear heavy leather gloves when handling wire rope.

HOIST CABLE INSTALLATION AND INSPECTION

The following steps will assure that the wire rope (aka hoist rope, hoist cable or load line) winds smoothly and evenly on the hoist and will yield greater safety and longer rope life:

1. If the cable needs to be replaced use 425 feet (129.5m) of 5/8 (16mm) diameter 6X36-EEIP-RRL-IWRC wire rope. (43,750 pounds (195kN).minimum breaking force).

2. If possible, the cable should be rolled off a storage spool and straightened out on the ground in line with the boom. If the ground is not clean or the space is too limited, the cable can be wound directly from the storage spool onto the hoist, but the spool must rotate in the same direction as the hoist drum.

3. Check the seizings on the ends of the cable and replace them if they are missing or damaged.

4. Install the cable over the boom tip sheave and route it through the cable retainer loops to the hoist drum.

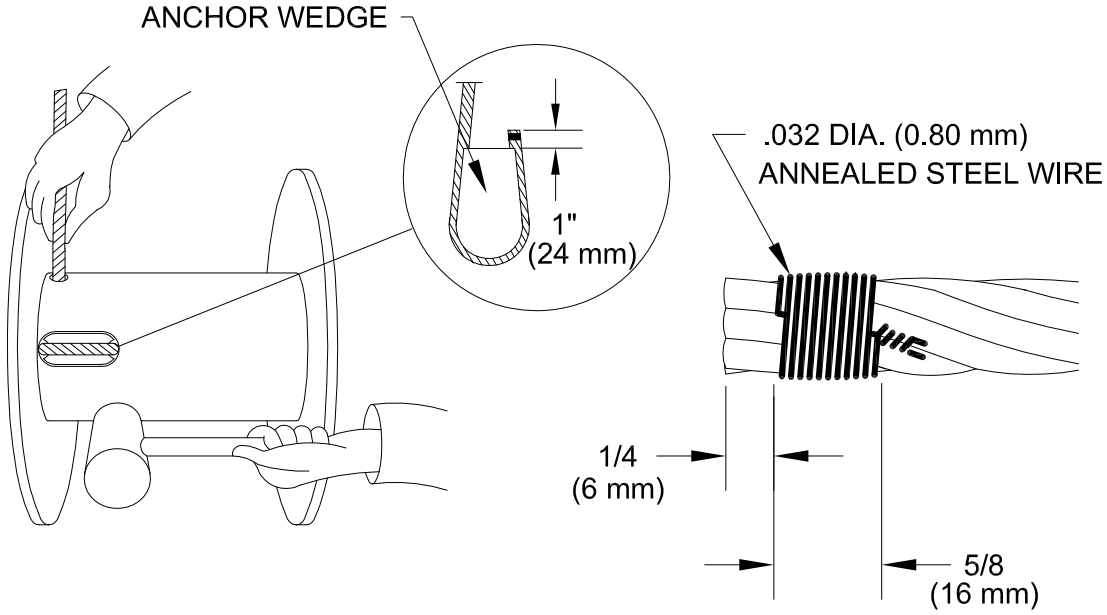

HOIST CABLE ANCHOR

WIRE ROPE SEIZING
FOR 5/8" DIA. (16 mm) ROPE

5. Position the hoist drum with the cable anchor on top.

6. Insert the cable through the anchor slot and wrap it around the anchor wedge. The end of the cable should extend past the wedge by about one inch (24mm).

7. Slide the cable and wedge into the drum socket and pull firmly on the free end of the cable to set the wedge. Seat the wedge securely with a brass or rawhide mallet.

8. Slowly rotate the hoist while applying tension on the cable in front of the boom. Wear heavy leather gloves and wrap rags around the cable to wipe off any dirt from the cable. Keep hands away from the sheaves and hoist drum while the cable is moving.

9. After two turns of the hoist drum, stop the hoist and push the cable into the drum groove if it has come out.

10. Slowly rotate the drum until the first layer of cable is on the drum. If any gaps between the rope appear, back up the hoist and rewind. There must be no gaps in the first layer.

11. After the first layer is on the drum, the hoist may be turned a little faster until the remainder of the cable is installed. Keep the hoist in low-speed mode during winding.

12. Leave about 40 feet (12 m) of cable on the ground to install the sheave block. The sheave block must be used for cable preloading to ensure enough rope can be spooled off the hoist drum. See the Operation Section for instructions on reeving and wedge socket attachment.

13. Install the cable retainer pins and cotters in the tip sheave plates.

14. For the cable preloading, set the outriggers and attach a load of about 3,000 pounds (1300 kg). Extend the boom fully. Position the load at a 10 foot (3m) load radius over the side of the crane. Hoist up and lower the load three times and check winding of the rope on the hoist.

15. Attach about 8,000 pounds (3600 kg) and repeat. Be sure that the cable winds evenly.

16. If the cable appears to twist too much, remove the sheave block and rewind the cable on the drum as in Steps 8-12.

17. Never lift more than the rated load on the Capacity Chart for the parts of line and type of wire rope being used.

18. Lubricate the cable as recommended in the "Wire Rope Lubrication" section. Inspect, maintain and replace the cable in accordance with ANSI B30.5-2007, Section 5-2.4.

CONTROL AND HYDRAULIC SYSTEM

The IC-400 control system is an electrohydraulic system and consists of three open-center circuits driven by a triple gear pump and controlled by electronic joysticks and switches. The pumps are a direct-drive and always moving fluid as long as the engine is running. Normally the flow of oil goes directly back to tank through dump valves. The joysticks are 2-axis levers with interlock triggers and are mounted to both arm rests. Once the triggers are squeezed by the operator the dump valves are closed and oil flows to the open-center valve circuits.

The 40-gallon-per-minute (151 L/min.) section of the pump supplies the three-spool upper control valve mounted on the turntable. This valve controls the two speed hoist, boom extension and the boom topping functions. Oil passes through the center post to reach the upper control valve above rotation. The electrical controls for this valve utilize CAN bus technology and passes through the slip ring to reach the valve. Only four wires are required to control all three spools. Each spool is fully proportional.

The 28-gallon-per-minute (106 L/min.) section supplies the five-spool lower control valve. This valve controls the swing and outrigger functions (6 spools with auxiliary front winch option). This valve is mounted to the front of the oil reservoir. The swing spool and optional front winch spool are fully proportional. The outrigger spools are On-Off type. The 28-gpm (106 L/min.) circuit also includes the steering system, in series and ahead of the five-spool valve. The steering system is a load-sensing, demand-type system that takes as much flow as required for steering. All remaining flow passes on to the control valve.

The 14-gpm (53 L/min) section supplies the brake system initially. The flow passes through an unloading valve. If the brake system pressures are adequate, the flow is diverted to the centerpost where it combines with the flow from the largest pump section. If the brake system pressures are low, the unloading valve shifts and allows flow into the brake system accumulators. The two accumulators are separated in a front/back split, such that each provides fluid either to the front or rear brakes. Flow and pressure to the brake calipers is controlled by a valve directly connected to the foot pedal in the cab.

The schematic of the hydraulic system is shown on the following pages. The transmission has its own hydraulic system that is shown in the transmission maintenance section.

IC-400-3A JIC SCHEMATIC
REV D

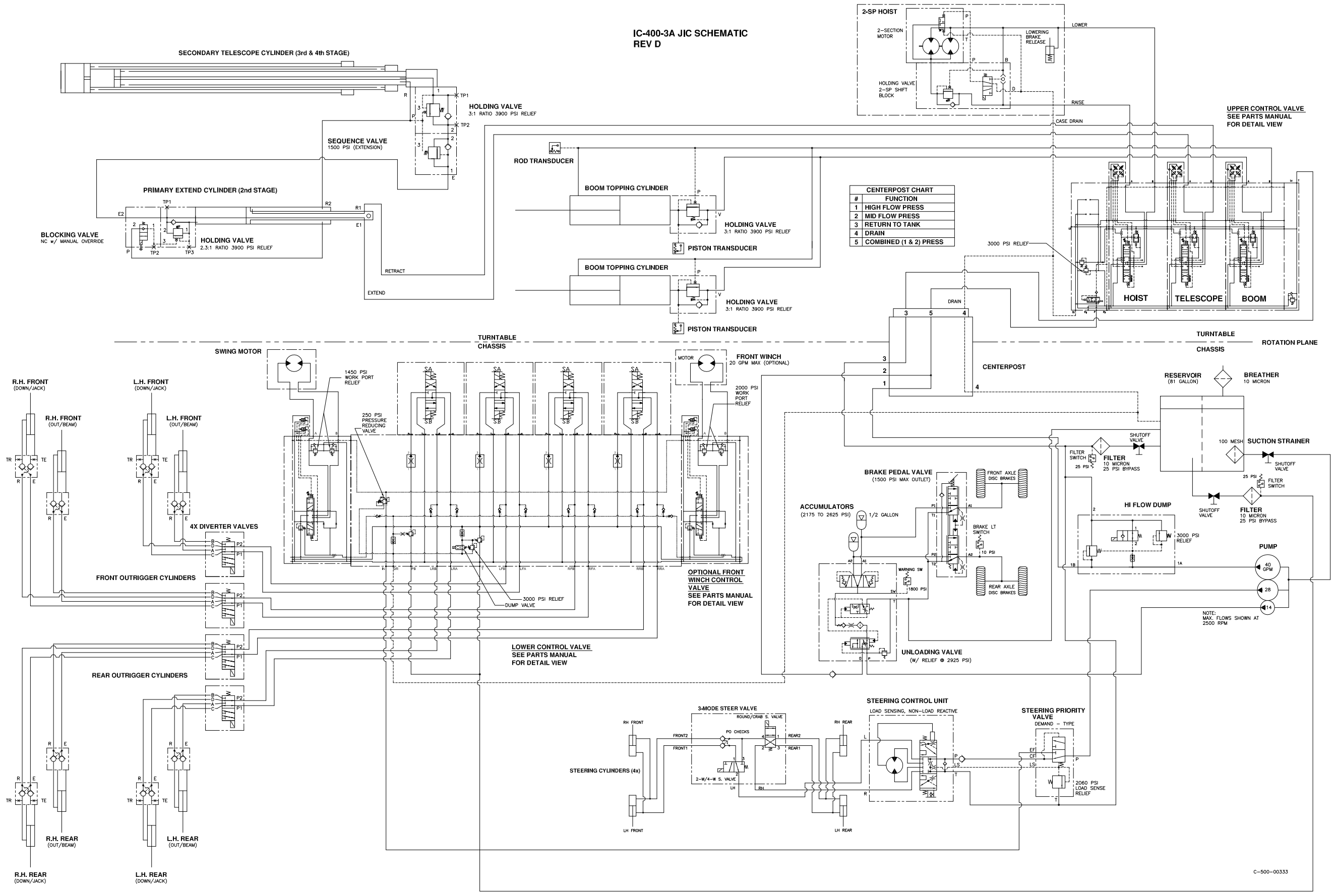

CENTERPOST CHART	
#	FUNCTION
1	HIGH FLOW PRESS
2	MID FLOW PRESS
3	RETURN TO TANK
4	DRAIN
5	COMBINED (1 & 2) PRESS

IC-400-3A JIC SCHEMATIC
REV A

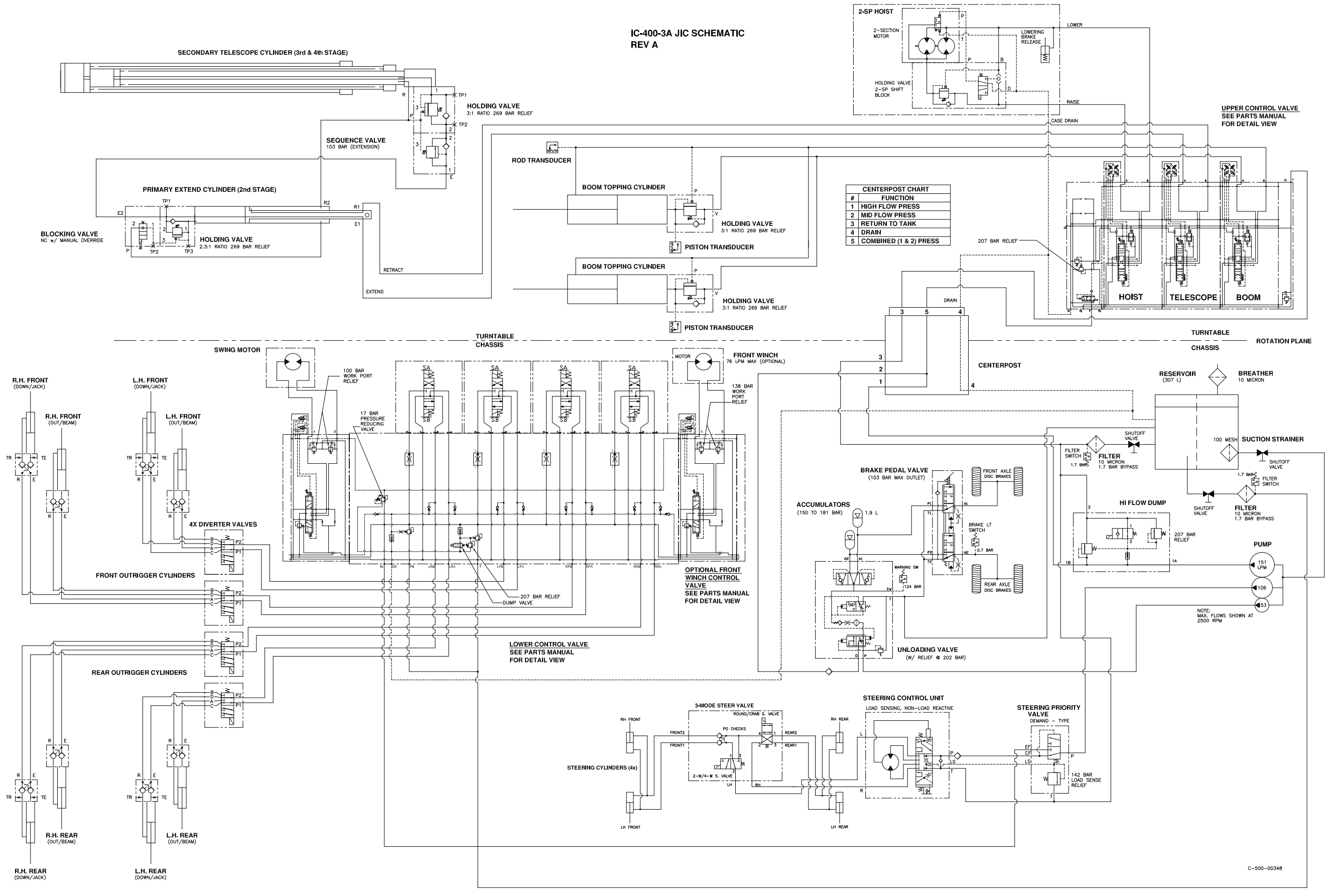

CENTERPOST CHART	
#	FUNCTION
1	HIGH FLOW PRESS
2	MID FLOW PRESS
3	RETURN TO TANK
4	DRAIN
5	COMBINED (1 & 2) PRESS

ELECTRICAL SYSTEM

The electrical system of the IC-400 includes the normal chassis harness system and the electronic control system that works with the hydraulic system. They are essentially two systems that interact at only a few points. Both systems utilize the common starter battery which feeds a bank of circuit breakers that in turns feeds a number of separate circuits. Each system has a separate wiring diagram. The wiring for above rotation circuits is also shown on a third diagram. Wiring diagrams are located in a pocket at the back of this manual.

The battery box, located under the right-hand deck, contains the starter battery and a large electrical enclosure box. The enclosure box, called the main Vehicle Electrical Center (VEC), houses a number of circuit breakers, relays and other electrical components in a water-tight box. A diagram of the internal layout is fixed on the inside of the lid. The majority of the circuits for this crane can be traced back to the VEC. However, there are two smaller enclosures mounted inside the operator compartment under the dash that also house circuit breakers, relays, and diodes. All circuit breakers are the automatic resettable type. There are very few actual fuses on the entire crane.

Both electrical systems employ a simple color code system for nearly all of the wiring harnesses. Red wires are for power, black wires are for grounds, and nearly all other wires are white. All three colors have labels printed each individual wire every 12 inches along the complete length, even inside the braiding. These labels give each wire an identity that can be traced throughout the system. Each termination has a connector number separated by an "→" and short description of the purpose of the wire in between. This will allow tracing circuits from one connector to another for simpler trouble-shooting.

CONTROL SYSTEM ELECTRONICS

The control system of the IC-400 starts with the joysticks. These are Hall-effect type devices with dual channels for error detection. The control system requires the outputs from both channels to be nearly identical. The trigger switch, supplied on each joystick, must be squeezed by the operator before moving the lever. The operator must also be situated on the seat so the controls system detects someone is present. The control system requires all three conditions in order to allow any output to drive a particular valve spool. There are several other interlocks to prevent inadvertent movement.

There are dump valves that must also close so fluid can flow to the spools. Both dump valves are powered through two separate relays. Both relays have to be energized before power can reach the dump valve coils. One relay is energized by the control system microprocessor and the other is powered directly through the trigger switches. If either relay is not powered, the dump valves do not shift and no motion takes place.

The actual controls are mircroprocessor-based and contained in sealed enclosures located under the dash in the Operators Compartment. On the base machine, there is one 50-pin controller and two (2) 24-pin controllers. If an auxiliary front winch is ordered, another 12-pin controller is added. There is no physical access inside these microprocessors for maintenance. The engine display monitor on the left-hand dash allows some limited software access for maintenance using a passcode. A 3-pin connection point is located just below the dash, next to the A2B override key, to provide an interface with a laptop computer. This computer service port works for both the controls software and the engine software.

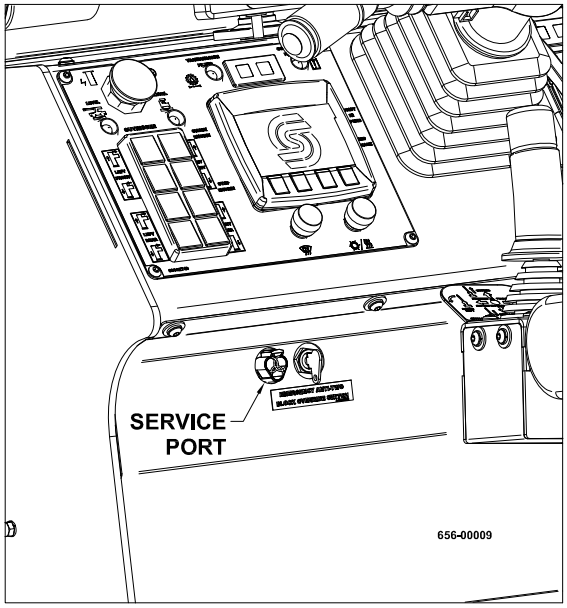

This control system utilizes CAN-bus technology in a number of places to reduce wiring and allow access to engine information. CAN connections utilize the blue jacket cables with triangular connectors on each end. The system uses these cables for communication between each microprocessor, the outrigger 8-button pad, the display monitor, upper control valve, and finally, with the engine itself. These components cannot be diagnosed using traditional methods. Call the BMC factory service tech for help in diagnosing any of these components.

CONTROL SYSTEM FAULTS

The control system of the IC-400 routinely checks itself for potential problems at start-up and during operation. There is a red LED fault light on the left-hand dash to indicate that there is a fault in the system. Use the left hand dash display monitor to access the 'Faults' screen. Select 'System Faults' and a list will be displayed. The particular fault will flash and sometimes alternate if there is more than one issue. These faults are typically either a connection issue or a calibration issue.

Before attempting to trace any fault, simply turn the engine off, pause for a second and restart. The control system will self check at each startup and blink the fault light once. The fault light should stay off. If it stays on, pursue troubleshooting based on the issue displayed on the fault screen. Connection issues would normally involve one of a number of inputs in the system. Below are listed most of the external inputs the system depends on:

- Fuel sender
- Hydraulic tank temperature sensor
- Joysticks
- Level sensor
- Outrigger jack limit switches (four switches in parallel for four inputs)
- Outrigger beam switches (four switches in series for one input)
- Transmission neutral switch
- Operator seat switch
- Emergency stop switch
- Aux winch stow switch (optional)
- Return line filter pressure switches (2x)
- Hoist high-speed switch
- Outrigger 8-button pad
- Drum rotation sensor
- Minimum wrap sensor (optional)
- Air filter differential pressure switch
- Brake accumulator pressure switch

Only three devices (four if optional front winch is ordered) need calibration, the joysticks and the level sensor. If a fault indicates a joystick has an X-axis or Y-axis problem, simply recalibrate each joystick. First turn the engine off, but put the key in the "on" position. Hold each lever in each of four directions for a minimum of 3 seconds each. It is not necessary to hold the trigger switch while calibrating. Both joysticks can be done at the same time. If this is the problem, the fault light will go out and the controls should be in full operation. If the light stays on, go back to the fault screen and see if there is another fault that must also be taken care of. If it still indicates the joysticks, remove the cover below each joystick and check each connector. Also, follow each harness under the arm rest to the back of the seat where it will make another connection before passing under a cover. If any of the connections are found to be loose, tighten them. Recalibrate each joystick to see if it now clears the fault. The level sensor is calibrated at the factory and should not need recalibration in the field. If the level sensor is replaced in the field, then a recalibration will need to take place. See instructions that come with the sensor.

STEERING SYSTEM

The steering system is also shown in the hydraulic schematic. The IC-400 steering system is a load-sensing, demand-type system that takes only as much flow as is needed when steering and directs the excess flow to the control valve for boom and outrigger functions. The priority flow-control valve is in the line between the 28 GPM (106L/min) pump section and control valve.

Oil from the 28 GPM (106L/min) section of the pump goes into the priority valve at port "P." When no steering is required, the entire flow goes through the priority valve and leaves through port "EF" to the lower control valve. The crane operating speed is not affected since there is no loss of volume passing through the priority valve.

When the steering wheel is turned, the load-sensing line signals the priority valve to divert the required amount of oil to the steering control unit to meet the steering system requirements. The excess oil, not required for steering, flows to the crane control valve as usual. Since the amount of oil required for steering is usually a small portion of the pump output, the lower control valve is always operational while the unit is being steered. Crane operation speed is reduced such a slight amount it is usually not noticed.

The steering control unit is non-load reactive. This means that bumps, curbs, and obstacles cannot change the steering angle and are not felt in the steering wheel. It also means that the wheels do not recenter when the steering wheel is released. The steering wheel must be turned back to center at the end of a turn.

There is a check valve in the pressure line between the priority valve and the steering control unit. This prevents pressure in the steering cylinders from venting back into the pressure line when the pressure is low. This eliminates steering wheel kickback when the steering wheel is released.

The steering system pressure was set at 2060 PSI (142 bar) at the factory, and this should not need adjustment.

The three steering modes are selected by a switch on the dashboard which activates the automatic alignment system. Electronic proximity sensors and logic controls delay the switching of the steering mode until the wheels are centered. The proximity sensors should be cleaned periodically with a rag to prevent dirt buildup from blocking their operation.

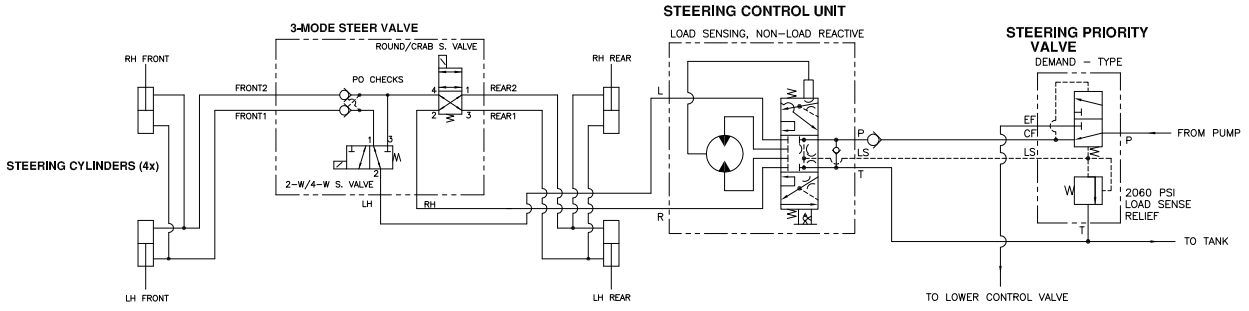

CARE OF HYDRAULIC OIL

The hydraulic system contains many highly pressurized, precision components. To protect the system, it is very important to keep the hydraulic oil clean, within proper temperature range for the oil specification, and to the proper fill level.

The IC-400 is equipped with a 100-mesh suction strainer, a breather filter, two 10-micron return-line filters and a 81 gallon tank (307 L). The filters must be changed whenever the filter icon on the dash display is illuminated or at 500 hours or six months maximum. The dash display icon may be illuminated temporarily if the oil is cold. Warm the oil with 15 minutes of normal operation. The icon should be checked on a daily basis.

The filters are located on the front and rear of the hydraulic tank. Clean the filter and the surrounding parts before changing to prevent dirt from getting into the open filter housing. To minimize oil loss, close the shutoff valves in front of each filter.

NOTICE

Machine damage or oil spills are possible. Internal damage can occur if pump is starved of fluid. Filters can explode if overpressurized. Be sure shutoff valves are returned to fully open position before starting engine.

Remove the filter elements and catch the hydraulic oil in a clean container. Pour the remaining oil out of the old elements into the clean container and inspect the oil for water and excessive contaminants. If water is found, the oil should be changed in the reservoir and purged out of the cylinders. If excessive particles are found, the source should be located and fixed, and the oil should be purged.

Lubricate the new element seals and install the new element. Open the shutoff valves. Run the engine and check for any leaking around the seal.

The hydraulic oil should be changed every 1000 hours or once a year, whichever is sooner. Retract the telescope, boom and outrigger cylinders. Leave the shutoff valves open and remove the drain plug. Catch the oil and dispose of it properly.

Remove the main deck cover and breather from the top of the tank. Clean the element with solvent and compressed air. Open both clean out covers on the tank. Clean the tank with solvent and compressed air.

The suction strainer is located at the bottom rear of the hydraulic tank where the suction hose from the pump connects to the tank. The strainer has a reusable element. To service, remove the suction hose from the fitting connecting to the shut off valve. Remove the element from the outside of the tank by turning the hex-shaped plug counter-clockwise. Wash the element in clean solvent and allow to dry. Reassemble the strainer and fittings into tank.

Replace the filters as described previously and refill the tank with new hydraulic oil that meets the specifications in the table below. Start the engine and run it at low idle for 15 minutes to filter the new oil. Then cycle all of the hydraulic cylinders at low idle and low pressure. Retract all cylinders. Add hydraulic oil until the level on the tank sight gage is just below the “FULL” mark.

HYDRAULIC OILS FOR IC-400

AMBIENT TEMP RANGE:	-40° to 75°F (40° to 24°C)	-15° to 110°F (26° to 43°C)	50° to 130°F (10° to 54°C)
POUR POINT:	-40°F MAX (-40°C)	-15°F MAX (-26°C)	0°F MAX (-18°C)
VISCOSITY INDEX:	140 MIN	95 to 100	95 to 100
VISC. SSU @ 100°F:	200 MAX	230 MAX	340 MAX
SSU @ 210°F:	44 MIN	47 MIN	53 MIN
EXAMPLES:	MOBIL DTE-13 MOBIL UNIV.-ATF TEXAMATIC TYPE F TEXACO HD 46	MOBIL AW-46 MOBIL DTE-25 CONOCO SUPER 46 TEXACO HD 68	MOBIL AW-68 MOBIL DTE-26 CONOCO SUPER 68

OTHER REQUIREMENTS: Must contain rust and oxidation inhibitor, and antifoam and antiwear agents. Must pass Vickers Vane Pump Test.

The IC-400 is factory filled with hydraulic oil for the -15° to 110°F (-26° TO 43°C) range. If significant portions of run time is spent operating below 20°F (-7°c) or above 100°F (43°C), the oil should be replaced with an extreme temperature oil.

CAUTION

Never add kerosene or other "thinners" to hydraulic oil. These fluids have low aniline points and consequently will cause rapid deterioration of certain packings and seals in the hydraulic system.

CAUTION

Serious damage to the pump will result if it is run with the shutoff valves closed or with insufficient oil level in the reservoir.

Observe the operation of the machine. If the oil is too cold (below 40°F (5°C)), the machine will be sluggish. It should be warmed up further to prevent damage before sustained hard work is attempted. If the oil is too hot (above 170°F (75° C)), bleed-by leakage will increase, pump efficiency will go down, and moving parts will not be properly lubricated. If operating temperature continues to be excessive, rapid deterioration of the oil will result and moving parts and seals will wear more quickly. The cause of the excess heat should be determined and corrected. The hydraulic temperature in the tank can be monitored on the dash display using the 'Hydraulic Temp' screen.

REMOVAL OF AIR FROM HYDRAULIC CIRCUITS

To remove air from hydraulic circuits, perform the following steps:

1. Ensure all main shutoff valves on the reservoir are open.

2. Start the engine.

3. Raise and lower the boom minimum five times. Ensure that the cylinder travels full stroke.

4. With the boom retracted and elevated to at least 65°, raise and lower the hook at least once with the hoist.

5. Extend and retract the boom minimum five times.

6. Swing the turret left one full revolution. Swing the turret right one full revolution.

7. Extend and retract each outrigger beam minimum five times. Extend and retract each outrigger jack minimum five times. Outriggers can be operated in pairs.

8. With the crane on outriggers, steer the crane wheels fully left and right three times in each steering mode.

9. Check the level of oil in the hydraulic reservoir and add more if necessary.

10. Set the crane on outriggers. With the boom about halfway extended and about 45° elevated, lift a load near maximum capacity using the hoist. Raise the boom an additional 10-15°. Extend the boom. Check for “spongy” operation.

11. If necessary, cycle functions again to remove remaining air.

HYDRAULIC SEALS

W A R N I N G

Do not check for hydraulic leaks with hands. If a mist of hydraulic oil is noticed around a line or component, use cardboard or other material to check for location of leak. High pressure fluid leaking from a small hole, can be almost invisible, yet have enough force to penetrate the skin. If injured by escaping fluid, see a doctor at once. Serious reaction or infection can occur.

All hydraulic fittings and hose connections should be kept tight to prevent loss of fluid from the system and unnecessary dripping from the machine. Some hydraulic fittings on the IC-400 crane use o-ring seals, and if tightening the fitting fails to stop the leak, the o-ring should be replaced.

Notes:

1. When installing an o-ring fitting with an adjustable nut and washer, be sure to back off the nut, washer and o-ring as far as possible before threading the fitting into the port. Then turn the fitting into the port as far as possible with fingers and turn it backward until it is oriented properly. Torque the nut with a wrench, while holding the fitting with another wrench.

2. Lubricate all seals before assembling.

3. Take care not to over tighten pipe threads.

4. Do not use Teflon tape to seal pipe treads. Loctite-type (anaerobic) sealant is preferred.

Leaks in component parts, such as pumps, valves and motors, that cannot be stopped by tightening bolts, can usually be stopped by replacing the seals in the component. Seal and packing replacement is the only maintenance which owners should attempt on component parts, unless they have a well-equipped shop with mechanics trained in hydraulic component overhaul.

Leakage in the pump suction line may not cause oil to appear externally, but may allow air to enter the line during operation. The air entrained in the oil will cause pumps to be noisy, and if allowed to continue, can damage the pump. If a pump becomes noisy, immediately check the fluid level in the reservoir and be sure all suction fittings are tight. If noise continues, squirt hydraulic fluid on the suction connections. Listen for a change in the noise and watch for oil being sucked into a small opening in the connection. When the reservoir is full, the shutoff valve is open and all suction connections are tight, most pump noises will disappear. If they do not, a worn or faulty pump is indicated. On a routine basis, all hoses should be checked for wear, deterioration, and physical damage. Defective hoses should be replaced for maximum economy for the user.

PRESSURE SETTINGS:

The hydraulic system is divided into three pressure circuits, each having its own protective relief valve. The functions operated by the control valve sections require different pressures for different functions. These are covered in sections below:

1. Hoist and Boom Circuit -- 3000 PSI (207 bar) at full flow.
2. Outrigger Circuit -- 3000 PSI (207 bar) at full flow.
3. Brake Circuit – 2925 PSI (202 bar) at full flow. (Non-adjustable, see Brake Maintanence section.)

A good quality pressure gauge with at least a 3000 PSI (207 bar) scale is required to make adjustments properly. A 3000 PSI (207 bar) working pressure hose with adapters to fit the 3/8" tube pressure ports is required to install the gauge where it can be read easily.
The following procedures are suggested when taking pressure readings:

HOIST/BOOM TOPPING/BOOM TELESCOPE CIRCUIT:

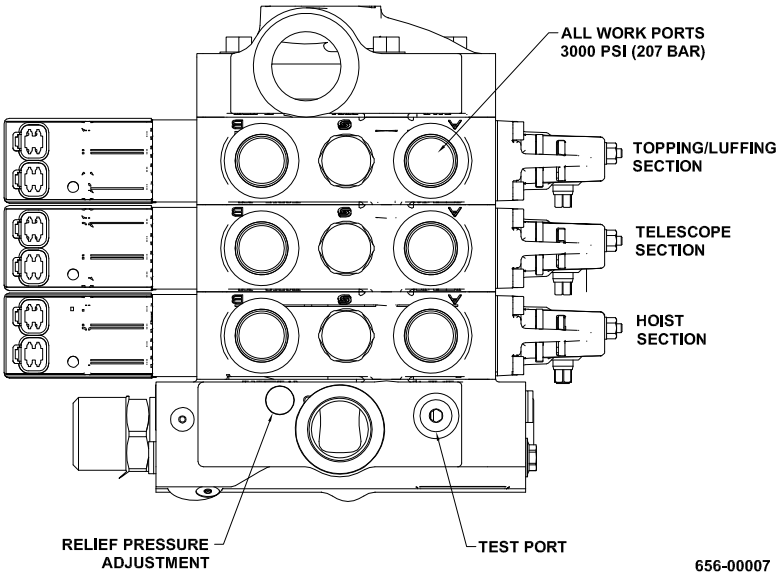

Remove the plug from under the control valve near valve inlet section and install a 3000 PSI (207bar) pressure gauge. To obtain full flow reading, run engine at full speed, pull boom telescope control to RETRACT position and hold until maximum reading is made. If a pressure of 3000 PSI (207bar) is not acheived, check the following:

1. Broken pump shaft.
2. Low oil level in the reservoir.
3. Clogged suction strainer or shutoff valve not fully opened.
4. High flow blocking valve does not fully close. Check electrical connection to coil to verify it has +12VDC when function energized.
5. High flow blocking valve relief pressure is set too low. The high flow blocking valve is located on the rear of the hydraulic oil tank, under the turret. Turn adjustment screw IN (CW) to increase.
6. Hot oil reaching temperature limits. Allow to cool to more normal temperatures.
7. Adjust relief valve by loosening cap on top of relief cartridge next to inlet port and turning socket-head screw clockwise to increase pressure or counter-clockwise to lower pressure.
8. Foreign particle in pilot operated relief.
9. Worn or defective hydraulic pump.

SWING AND OUTRIGGER CIRCUIT:

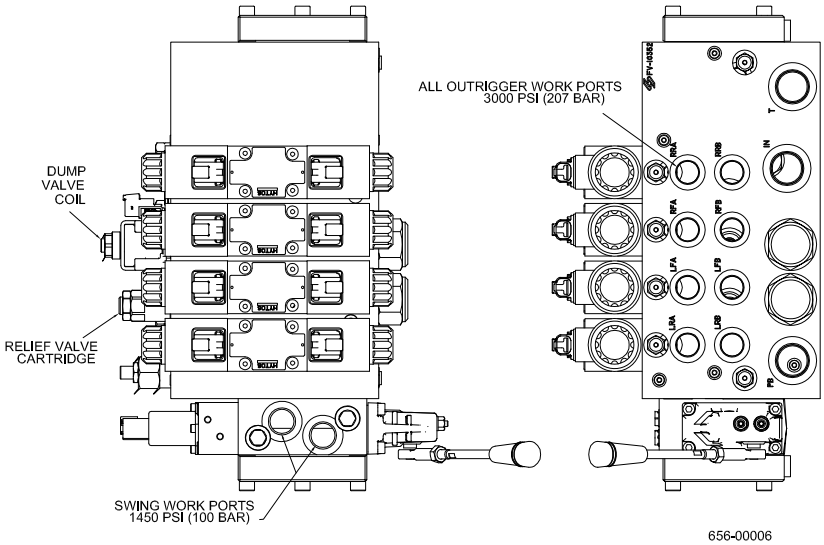

The relief valve pressure setting at the inlet for outrigger control sections is 3000 PSI (207bar). This pressure is required for all but the swing control section. Two work port relief valves are installed in the swing section. These relief valves are set at 1500 PSI (103bar).

To check settings, install 3000 psi pressure gauge into inlet port.
The relief pressure at the inlet end of the valve can be adjusted with a wrench and an allen wrench. Loosen the nut and tighten the threaded stem with an allen wrench to increase pressure, and loosen the stem to decrease pressure. Lock in place with the nut. Actuate the BEAM RETRACT or JACK RETRACT function with the cylinders fully retracted when making this adjustment.

While the pressure gauge is attached, the swing function may be checked by capping the two work ports of the swing section and actuating the swing control lever in each direction. If these pressures are not correct, the work port relief valve or 'shock valve' should be replaced. Part numbers for the work port relief valve are in the parts manual.

BRAKE SYSTEM CIRCUIT
The brake system circuit relief pressure is 2925 PSI (202 bar). The pressure is set at the factory and should not require adjustment. The pressure can be checked as described in the brake system maintenance section.

BOOM LIFT CYLINDER HOLDING VALVES
A holding valve is mounted into the base of each boom lift cylinder barrel. These valves are designed to hold the boom in position should loss of power or pressure line failure occur.

To check the boom lift cylinder holding valve, set the outriggers, place the boom in the horizontal position over the front of the crane and raise rated load about six inches (15cm) above the ground using the boom lift cylinder (not the hoist). The best load for this test is the rated load at the 20-foot (6.0m) load radius with outriggers extended and the boom over the front. Turn the engine off and put the key in the ON position. Actuate the BOOM DOWN valve spool on the upper control valve. If the boom moves down, a holding valve may be malfunctioning or a boom lift cylinder may have leakage past the piston seal.

W A R N I N G

Before working on the holding valves or plumbing to the boom lift cylinders, always relieve trapped pressure. Lower the boom fully, turn off the engine, turn on the key and cycle the BOOM control.

Relieve trapped pressure before loosening any hydraulic fittings or plugs on the boom lift cylinder. Relieve trapped pressure as described on page 3-42.

1. Lower the boom fully.
2. Turn off the engine but put the key in the ON position.
3. Cycle the BOOM UP and BOOM DOWN controls several times.

To determine whether the problem is in the left or right-hand cylinder, put a pressure gauge with a range of at least 5000 PSI (350bar) on a cylinder. Attach it to the SAE #6 “TE” port on the side of one of the valve blocks, next to the holding valve cartridge.

With rated load on the hook, the boom over the front, and outriggers set, record the pressure on the gauge while slowly raising the load about three feet (1 m) Then return the boom control lever to neutral and record the pressure. Then turn the engine off, leave the key on and shift the BOOM lever to the LOWER direction and record the pressure on the gauge. Repeat on the other holding valve. If the pressure to hold the load is lower at one valve than the other, the lower pressure side is the problem side.

First, try to raise the pressure in the problem side to match the pressure on the other valve. Loosen the adjustment nut. Tighten the adjusting screw to increase pressure setting. Retighten the lock nut.

If adjusting the holding valve does not fix the problem, continue troubleshooting. Lower the boom fully. Turn off the engine and put the key in the ON position. Shift the BOOM DOWN and BOOM UP controls back and forth repeatedly. Switch the holding valve cartridges from left-hand to right-hand and vice-versa. Repeat the pressure tests. If the problem side changes, the holding valve is at fault. If the problem side is the same, then the piston seal is leaking.

After the problem has been solved, remember that twin lift cylinders must have matched settings on holding valves.

TELESCOPE CYLINDER HOLDING VALVES

There are two telescoping cylinders on the IC-400 and each has a separate holding valve. The primary cylinder moves the second stage and has the valve located at the barrel end on the side. A second holding valve is directly connected to the base of the telescope cylinder rod on the secondary cylinder. These valves are designed to hold the boom in position should loss of power or pressure line failure occur.

The holding valve should be checked with the boom elevated to the maximum angle and the boom extended to a 8 foot (2.4m) load radius. The boom should be about 40.5 feet (12.3m) long in this configuration, with the secondary cylinder partially extended. A 36,000 pound (6300kg) load on a four-part line is required for this test. Use the hoist to lift this load about six inches (15cm) above the ground. The radius of the test load should be within the rating on the capacity chart. Use great care to prevent the load from hitting the crane.

Turn the engine off, put the key ON and pull the TELESCOPE control to the RETRACT position. If the boom retracts, the valve should be adjusted.

To adjust the holding valve, loosen the lock nut on the adjusting screw and tighten screw until unpowered movement stops. Retighten the lock nut to hold the proper adjustment. The boom will have to be lowered to make adjustments.

BOOM SEQUENCE

The IC-400 boom extension function is designed to extend and retract in predictable sequence. During extension, the second stage extends 12 feet (3.7 m). After which the third, fourth, and fifth stages extend together 11.5 feet (3.5 m) each. Total extension is 46.5 feet (14.2 m). Retraction is the opposite sequence, with the third, fourth, and fifth stages retracting together first, after which the second stage retracts. The reason for this sequence is to get the largest (strongest) section out first and in last.

The IC- 400 uses two extension cylinders to extend all four moving stages. The primary cylinder is dedicated to extending and retracting the second stage. The secondary cylinder is a multistage design and uses a chain system to proportionally extend and retract the third, fourth, and fifth stages together. Both cylinders have their own holding valves. The system requires each cylinder to work one at a time.

Special valving is required to control the sequencing of the boom stages. Also special internal passages are required in the primary extension cylinder (see the illustration below). A sequence valve is located with the holding valve block mounted directly onto the secondary cylinder rod. When oil is directed to extend the cylinders, the sequence valve will bias all the oil flow to the primary cylinder first, until it has fully extended. Then extending oil overcomes the sequence valve to pass into the secondary cylinder.

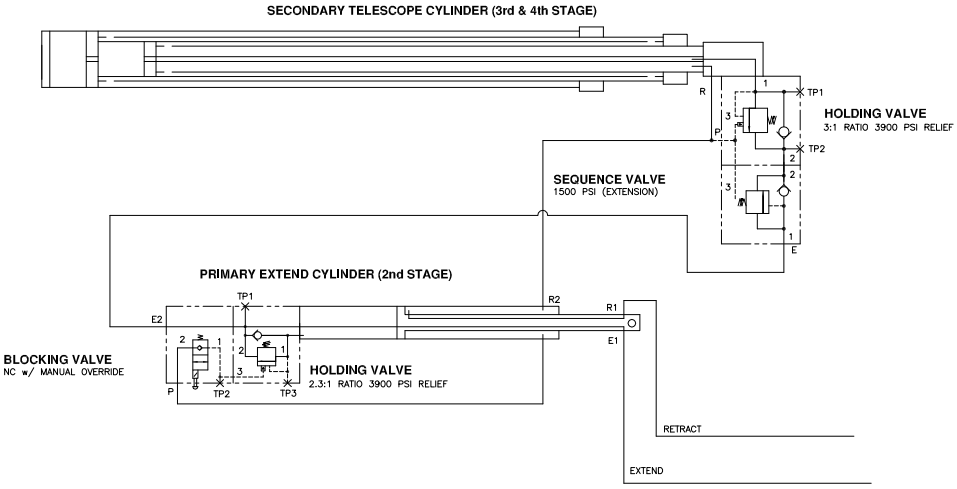

A separate normally closed blocking valve is required for retraction and located in the base end next to the holding valve of the primary cylinder. The blocking valve can be seen on the end of the cylinder as it extends out of the base boom. Oil directed to retract must open each holding valve to allow oil to flow out of either cylinder. The path to open the primary holding valve is blocked by the solenoid operated valve, but the secondary holding valve is opened and allows retraction of the third, fourth, and fifth stages initally. A limit switch senses when the secondary cylinder is fully retracted and energizes the blocking valve coil that normally prevents the primary cylinder from retracting. The second stage is allowed to retract fully such that all booms are properly stowed.

VALVE SETTINGS:

Approximate factory settings are 1500 psi (103 bar) on the sequence valve (secondary cylinder). Valves are fine-tuned to control boom stage sequencing at all boom angles and normal hydraulic oil temperatures. Setting the valves higher than required will generate additional heat in the hydraulic system and also waste fuel. Turning the adjustment screw in on the sequence valve adjustment will increase the valve setting.

TROUBLESHOOTING:
If boom stages fail to sequence properly while extending, it is probably due to a sequence valve being set too low to overcome a tight second stage boom, or there is contamination or malfunction of the sequence valve. If the boom stages fail to sequence properly while retracting, it is either the blocking valve set in the manual override position, limit switch not adusted, loss of 12 VDC or there is contamination holding the blocking valve open.

Dirt in the cartridge could cause a sequencing failure. Before removing cartridges, relieve trapped pressure as described on page 3-42. All cartridges may be removed for cleaning or replacement. Disconnection of hydraulic hoses is not required to remove the valve cartridges. The manual override is a feature integrated into the blocking valve cartridge that will allow a manual stowing of the second stage if there is ever a malfunction that can not be solved in the field and the crane must be transported. The red knob above the cartridge coil is a quarter-turn push-in override mechanism for emergency purposes only. It should always be returned to its normal out position when the malfunction has been rectified.

BOOM CHAIN ADJUSTMENT

Study Illustrations 1,2 and 3 to understand the chain adjustment procedure. Proper adjustment is critical at time of boom assembly or scheduled maintenance.

Initial adjustment: Retract boom completely. The 5th stage extension and retraction chains determine the position of the 5th stage relative to the 4th stage. As shown in Illustration 1, **½"** (13mm) clearance must be held between the 5th stage tip and 4th stage tip. To increase this distance, loosen the retraction adjustment and tighten the extension adjustment. To decrease this distance, loosen the extension adjustment and tighten the retraction adjustment.

Final adjustment: Extend boom completely while horizontal, then slightly retract the boom to let the chains relax. Measure the inside chain drape at the center of the rear 3rd stage and 2nd stage windows as shown in Illustration 3. See arrows in the windows for measuring locations. Measure the outside chains at midspan. Snug the 5th stage extension and retraction chains until the chain tightness allows the dimensions of approximately 1" (25mm) and 5" (127mm) as shown in Illustration 3. Also snug the 3rd and 4th stage compensation chains to the dimensions of 1 1/8" (29mm) and 3 7/8" (98mm) as shown. Assure that the drape in each pair of chains is matched so each chain carries its share of the load. Run boom in and out a few times and recheck all of the above dimensions. After proper settings retighten the adjustment lock nuts.

The numbers "3" shown in the small windows on the bottom of the 3rd stage and base boom show the adjustment is about midrange. These numbers run from 1 to 6 in 1" (25mm) increments. Numbers in these windows are approximate adjustment and cannot be used for final adjustment. Important are the dimensions stated above taken at the large side windows.

BOOM CHAIN ADJUSTMENT

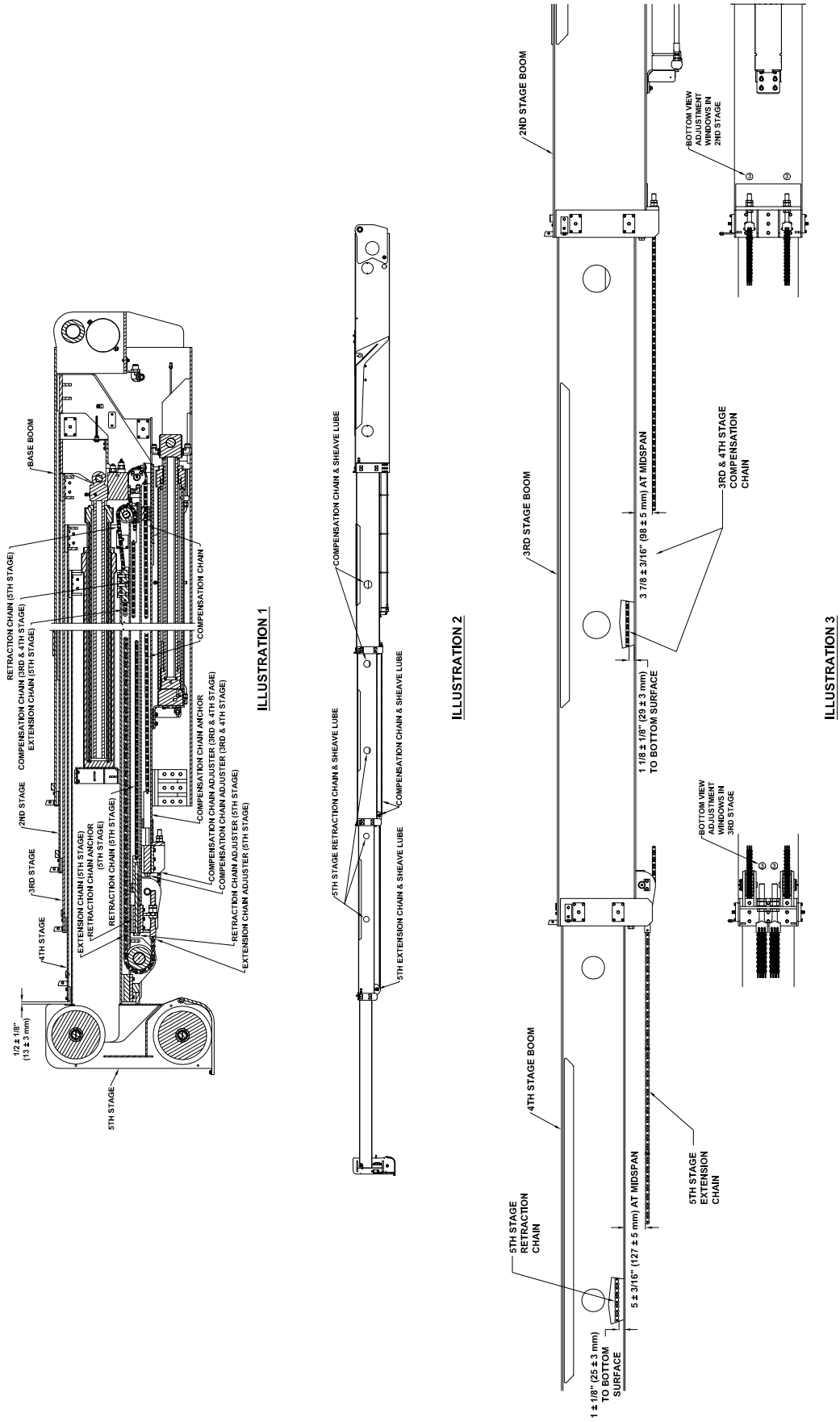

ENGINE MAINTENANCE

Refer to the engine manual for additional engine maintenance. The air filters and oil dip stick can be accessed outside the engine compartment on the left-hand side of the machine behind the operators compartment. For additional engine maintenance, a slide off cover pulls to the rear. The turntable does not need to be rotated. There are additional access holes through the frame rails inside each rear wheel.

AIR CLEANER SERVICE:
Check the air filter restriction visual indicator weekly with the engine running. If the indicator is in the “Replace” zone, replace the primary and secondary filter. An icon on the dash display will illuminate if the filter restriction indicator detects too much pressure drop across the filter. If the filter has not been changed for over 1000 hours, replace the filter regardless of the restriction indicator reading or dash icon.

COOLING SYSTEM:
Check the level of coolant in the radiator overflow tank daily. Add a mixture of antifreeze and distilled water to the overflow tank as required to maintain the coolant level. Check the radiator fins for dirt or debris daily and wash the fins with a pressure or steam cleaner every 50 hours or as required. Check the antifreeze protection level every 500 hours. Every two years, flush the cooling system and replace the thermostat and coolant. Pressure test the system as specified by the engine manufacturer.

SPARE PARTS LIST:
A spare parts list (including oil filter, fuel filter, etc.) may be found in the Parts Manual, under Engine and Transmission Installation.

MAJOR ENGINE SERVICING OR OVERHAUL:
Major servicing or overhaul is beyond the scope of this manual. Consult authorized engine service manual or rely on an authorized engine service center.

MECHANICAL ADJUSTMENTS

FASTENERS:
All fasteners on the IC-400 should be checked and retightened if required, as a part of the preventive maintenance program. Particular attention should be given to the drive axle mounting bolts, pump mounting bolts, rotation bearing bolts, rotation gearbox bolts, winch bolts, bolts holding primary extension cylinder to second stage, and bolts holding the boom 2nd stage supports to the outer boom. All bolts used in assembly are heat-treated Grade 5 or better. Torque the wheel nuts to 475 foot-pounds (645 Nm). Torque the rotation bearing nuts to 900-1000 ft-lbs (1220-1355Nm) while holding the bolts stationary. Alternatively, torque the rotation bearing bolts to 1200-1300 ft-lbs (1625-1760Nm) while holding the nuts stationary. Note, these inspection torques are less than installation torques. See the turret sub-assembly and turret installation in the parts manual for installation torques.

ROTATION GEARBOX:
The rotation gearbox assembly is attached to the chassis top plate by four cap screws. It is held in proper engagement with the external teeth on the bull gear by three setscrews. It is further restrained from torsional movement by three bolts on each side of the gearbox mounting flange. The gearbox should be adjusted with the boom centered over front of the chassis. This centers the gearbox pinion on the “high side” of the bearing gear teeth. Adjust the gearbox inward until there is “light contact” (.008/.013 inch clearance) between pinion and bull gear teeth. Metal shavings will occure if too tight. Swing function will appear ‘loose’ if too much gap. Retighten the four mounting bolts and the six side bolts.

RELIEVING HYDRAULIC PRESSURE

W A R N I N G

Failure to relieve trapped hydraulic pressure may result in high-pressure fluid penetration of the skin. If injured by escaping fluid, see a doctor at once. Serious reaction or infection can occur.

Relieve all trapped hydraulic pressure before disconnecting lines to hydraulic parts. Note that cycling the 8-button pad or joystick controls with engine off will not release trapped pressure. The electro hydraulic system requires pilot pressure to move the valve spools.

1. For steering system, turn steering wheel a few degrees each direction with engine off. This may require a great deal of force.
2. For brake system, pump the brake pedal with the engine off and the key on. Pump the brakes even after the brake warning icon appears on the dash display.
3. For outriggers, manually move the spools in the control valve using the override ports at the ends of the solenoids.
4. For the boom swing, topping/luffing, telescope, and hoist functions, an override handle is provided. The boom swing spool is located on the lower control valve on the bottom valve section. The other boom functions are located at the upper control valve mounted to the side of the turntable. Use the provided emergency handle or a wrench to manually cycle the valve spools, using the hex shaft at the end of each spool.

TORQUE DATA

BOLT GRADE	SAE GRADE 1 OR 2	SAE GRADE 5	SAE GRADE 8
MARKING			
MATERIAL	LOW CARBON	MEDIUM CARBON STEEL Q & T	MEDIUM CARBON ALLOY STEEL Q & T
MINIMUM TENSILE STRENGTH	64,000 PSI (441 MPa)	120,000 PSI (827 MPa)	150,000 PSI (1034 MPa)
BOLT SIZE	RECOMMENDED TORQUE VALUES FT-LBS (N-m)		
1/4	5 (7)	7 (10)	10.5 (14)
5/16	9 (12)	14 (19)	22 (30)
3/8	15 (20)	25 (34)	37 (50)
7/16	24 (32)	40 (54)	60 (81)
1/2	37 (50)	60 (81)	92 (125)
9/16	53 (72)	88 (119)	132 (179)
5/8	74 (100)	120 (163)	180 (244)
3/4	120 (163)	200 (271)	296 (401)
7/8	190 (258)	302 (409)	473 (641)
1	282 (382)	466 (632)	714 (968)

THE FOLLOWING RULES APPLY TO THE CHART:

1. Consult manufacturers' specific recommendations when available.
2. The chart may be used with coarse and fine thread fasteners lightly lubricated.
3. Increase torque by 20% when multiple tooth (shakeproof) lockwashers are used.
4. The torque values are given in foot-pounds (N·m).
5. Inch-pounds equivalent may be obtained by multiplying by 12.

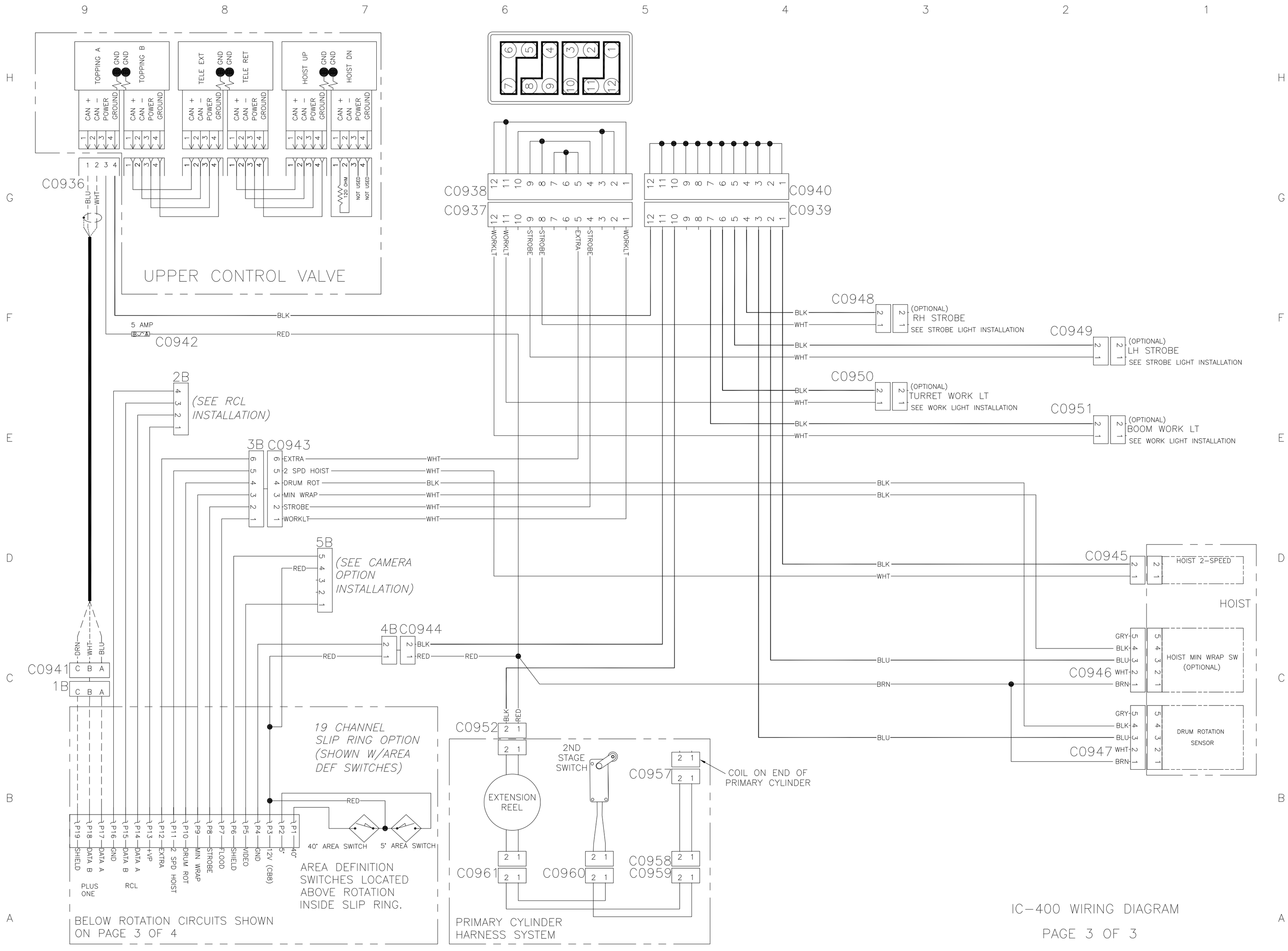

IC–400 WIRING DIAGRAM

PAGE 3 OF 3

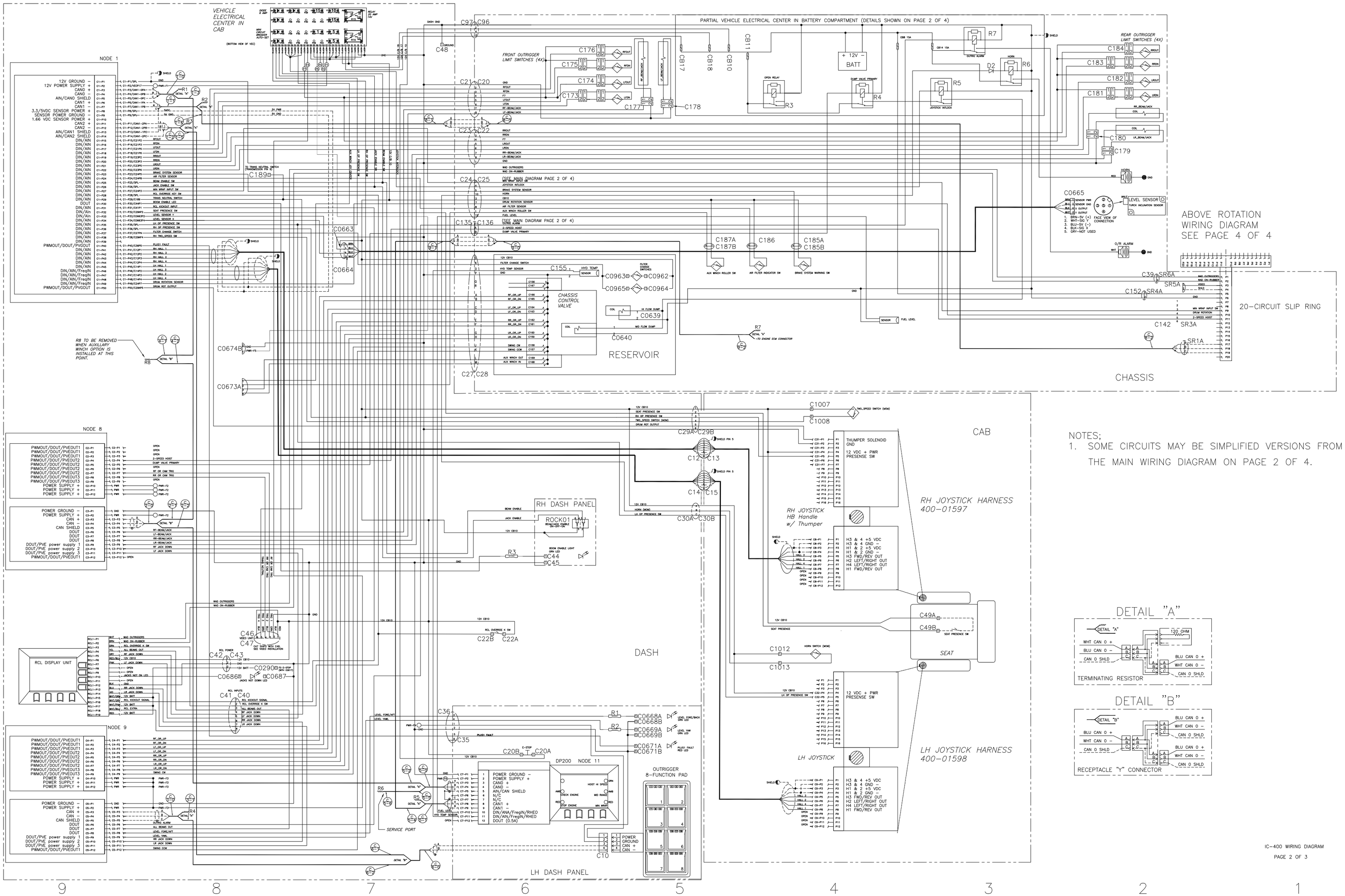

NOTES;

1. SOME CIRCUITS MAY BE SIMPLIFIED VERSIONS FROM THE MAIN WIRING DIAGRAM ON PAGE 2 OF 4.

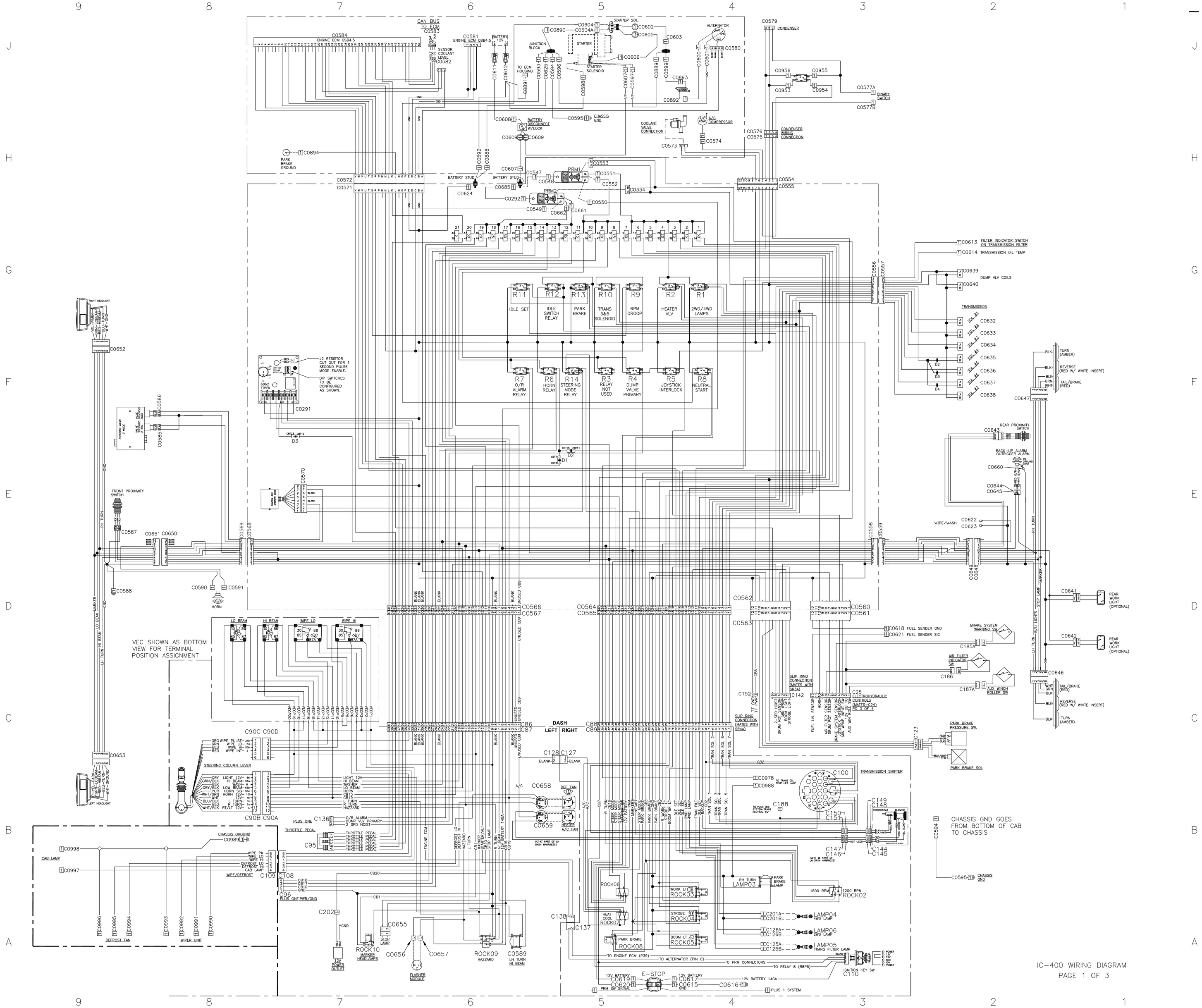

IC-400 WIRING DIAGRAM
PAGE 1 OF 3